CONTENTS February 2013

I. EXECUTIVE ORDERS

BJ 13-02 Carry-Forward Bond Allocation 2012 231

II. EMERGENCY RULES

Agriculture and Forestry

Office of Agriculture and Environmental Sciences, Structural Pest Control Commission—Minimum Specifications for Bait and Baiting Requirements (LAC 7:XXV.141) 232

Minimum Specifications for Trench and Treat Termite Control Work (LAC 7:XXV.141) 232

Wood Destroying Insect Report and Requests for Rule Changes or Declaratory Rulings (LAC 7:XXV.101, 121, 165 and 167) 233

Children and Family Services

Economic Stability Section—Drug Screening, Energy Assistance, and Substance Abuse Treatment Programs (LAC 67:III.1249, 1290, 1291, and 5563) 235

Health and Hospitals

Board of Pharmacy—Compounding for Prescriber Use (LAC 46:LIII.2535) 236

Bureau of Health Services Financing—Behavioral Health Services—Supplemental Payments (LAC 50:XXXIII.Chapter 161) 237

Coordinated Care Network—Dental Benefits Plan (LAC 50:I.Chapter 29) 238

Disproportionate Share Hospital Payments—Public-Private Partnerships (LAC 50:V.Chapter 29) 244

Early and Periodic Screening, Diagnosis and Treatment—School-Based Nursing Services (LAC 50:XV.Chapter 95) 245

End Stage Renal Disease Facilities—Reimbursement Rate Reduction (LAC 50:XI.6901 and 6903) 248

Family Planning Clinics—Reimbursement Rate Reduction (LAC 50:XI.3501) 248

Family Planning Waiver—Reimbursement Rate Reduction (LAC 50:XXII.2701) 249

Home and Community-Based Services Waivers—Adult Day Health Care Reimbursement Rate Reduction (LAC 50:XXI.2915) 250

Home and Community-Based Services Waivers—Community Choices Waiver—Reimbursement Methodology (LAC 50:XXI.9501) 250

Home and Community-Based Services Waivers—Residential Options Waiver—Reimbursement Rate Reduction (LAC 50:XXI.16901) 251

Home and Community-Based Services Waivers—Supports Waiver—Reimbursement Rate Reduction (LAC 50:XXI.6101) 252

Home and Community-Based Waiver Services—Cost Reporting Requirements (LAC 50:XXI.701) 253

Home Health Program—Durable Medical Equipment—Reimbursement Rate Reduction (LAC 50:XIII.10301) 254

Home Health Program—Nursing and Home Health Aide Services—Reimbursement Rate Reduction (LAC 50:XIII.701) 254

Home Health Services—Cost Reporting Requirements (LAC 50:XIII.121) 255

Hospice Services (LAC 50:XV.3301, Chapter 35, 3701-3703, 3901, 4101, and Chapter 43) 255

Hospice Services—Repeal of New Enrollments Termination 259

Inpatient Hospital Services—Major Teaching Hospitals—Supplemental Payments (LAC 50:V.1333) 259

Inpatient Hospital Services—Public-Private Partnerships—Supplemental Payments (LAC 50:V.Chapter 17) 260

Intermediate Care Facilities for Persons with Developmental Disabilities—Reimbursement Rate Reduction (LAC 50:VII.32903) 261

Laboratory and Radiology Services—Reimbursement Rate Reduction (LAC 50:XIX.4329 and 4334-4337) 262

LaCHIP Affordable Plan—Dental Program—Reimbursement Rate Reduction (LAC 50:III.20509) 263

Medical Transportation Program—Emergency Ambulance Services—Reimbursement Rate Reduction (LAC 50:XXVII.325 and 353) 264

Medical Transportation Program—Emergency Ambulance Services—Supplemental Payments (LAC 50:XXVII.327 and 355) 264

This public document was published at a total cost of $2,250. Five hundred copies of this public document were published in this monthly printing at a cost of $2,250. The total cost of all printings of this document including reprints is $2,250. This document was published by Moran Printing, Inc. 5425 Florida Boulevard, Baton Rouge, LA 70806, as a service to the state agencies in keeping them cognizant of the new rules and regulations under the authority of R.S. 49:950-971 and R.S. 49:981-999. This material was printed in accordance with standards for printing by state agencies established pursuant to R.S. 43:31. Printing of this material was purchased in accordance with the provisions of Title 43 of the Louisiana Revised Statutes.

The Office of the State Register provides auxiliary aids for the *Louisiana Register* for visually impaired individuals. By appointment, oral presentation of the *Register* is available at the Office of the State Register, or an audiocassette tape of requested sections of the *Register* can be provided for the cost incurred by the Office of the State Register in producing such a tape. For more information contact the Office of the State Register.

Nursing Facilities—Reimbursement Methodology—Low Income and Needy Care Collaboration (LAC 50:II.20023) 267
Nursing Facilities—Reimbursement Methodology—Private Room Conversions (LAC 50:II.20010) 268
Nursing Facilities—Reimbursement Rate Reduction—After State Fiscal Year 2013 (LAC 50:II.20005) 269
Nursing Facilities—Reimbursement Rate Reduction—Before State Fiscal Year 2013 (LAC 50:II.20005) 269
Pediatric Day Health Care Program—Reimbursement Rate Reduction (LAC 50:XV.28101) 270
Personal Care Services—Long Term—Cost Reporting Requirements (LAC 50:XV.12919) 271
Personal Care Services—Long Term—Reimbursement Rate Reduction (LAC 50:XV.12917) 271
Pharmacy Benefits Management Program—Methods of Payment (LAC 50:XXIX.105 and Chapter 9) 272
Professional Services Program—Anesthesia Services—Reimbursement Rate Reduction (LAC 50:IX.15133 and 15135) 275
Professional Services Program—Family Planning Services Reimbursement Rate Reduction (LAC 50:IX.15143) 276
Professional Services Program—Immunizations Reimbursement Methodology (LAC 50:IX.8305 and 8505) 277
Professional Services Program—Physicians Services—Reimbursement Methodology (LAC 50:IX.15113) 278
Professional Services Program—Reimbursement Methodology—Supplemental Payments (LAC 50:IX.15151 and 15153) 279
Prosthetics and Orthotics—Reimbursement Rate Reduction (LAC 50:XVII.501) 281
Substance Abuse Services—Reimbursement Rate Reduction (LAC 50:XXXIII.14701) 281
Targeted Case Management—Reimbursement Rate Reduction (LAC 50:XV.10701) 282
Licensed Professional Counselors Board of Examiners—Practice of Mental Health Counseling for Serious Mental Illnesses (LAC 46:LX.505) 283
Office for Citizens with Developmental Disabilities—Home and Community-Based Services Waivers Residential Options Waiver—Reimbursement Rate Reduction (LAC 50:XXI.16901) 251
Home and Community-Based Services Waivers—Supports Waiver—Reimbursement Rate Reduction (LAC 50:XXI.6101) 252
Office of Aging and Adult Services—Home and Community-Based Services Waivers—Adult Day Health Care—Reimbursement Rate Reduction (LAC 50:XXI.2915) 250
Home and Community-Based Services Waivers—Community Choices Waiver—Reimbursement Methodology (LAC 50:XXI.9501) 250
Personal Care Services—Long Term—Cost Reporting Requirements (LAC 50:XV.12919) 271
Personal Care Services—Long Term—Reimbursement Rate Reduction (LAC 50:XV.12917) 271
Office of Behavioral Health—Behavioral Health Services—Supplemental Payments (LAC 50:XXXIII.Chapter 161) 237
Substance Abuse Services—Reimbursement Rate Reduction (LAC 50:XXXIII.14701) 281
Office of Public Health—Added Controlled Dangerous Substance (LAC 46:LIII.2704) 284
Natural Resources
Office of Conservation—Statewide Orders No. 29-B and 29-B-a (LAC 43:XIX.Chapters 2 and 11) 284
Wildlife and Fisheries
Wildlife and Fisheries Commission—Fall Inshore Shrimp Season Closure 296
Recreational and Commercial Fisheries Closure—February 7, 2013 296
Recreational and Commercial Fisheries Closure—January 17, 2013 297
Remote Setting Program 298

III. RULES
Agriculture and Forestry
Office of Agricultural and Environmental Sciences, Structural Pest Control Commission—Structural Pest Control (LAC 7:XXV.Chapter 1) 300
Education
Board of Elementary and Secondary Education—Bulletin 111—The Louisiana School, District and State Accountability System—School Performance Categories (LAC 28:LXXXIII.1102) 304
Bulletin 111—The Louisiana School, District and State Accountability System—School Performance Score Component (LAC 28:LXXXIII.301, 409, 517, 612 and 613) 304
Bulletin 741 (Nonpublic)—Louisiana Handbook for Nonpublic School Administrators—Programs of Study (LAC 28:LXXIX.107, 109, 110, 111, and 113) 306
Technical Revisions and Updates (LAC 28:I.501) 307
Student Financial Assistance Commission, Office of Student Financial Assistance—TOPS GPA Calculation (LAC 28:IV.301) 308

Governor
Division of Administration, Office of State Purchasing—Master Agreements; Clauses; Approval (LAC 34:I.5517) 309
Procurement of Consulting Services as Related Services (LAC 34:I.5519) 309
Real Estate Appraisers Board—Real Estate—Peer Review Committees and Valuation Services (LAC 46:LXVII.10309 and 10701) 310
Health and Hospitals
Board of Examiners of Psychologists—Fees (LAC 46:LXIII.601 and 603) 311
Board of Pharmacy—Controlled Dangerous Substance License for Non-Resident Distributors (LAC 46:LIII.2705) 312
Controlled Dangerous Substances in Emergency Drug Kits (LAC 46:LIII.1713 and 2743) 312
Institutional Pharmacies (LAC 46:LIII.1705 and 1727) 313
Interstate Remote Processing (LAC 46:LIII.1139 and 1143) 313
Prescription Monitoring Program (LAC 46:LIII.2901, 2909, 2911, 2913, 2917, 2921, 2925 and 2931) 314
Security of Prescription Department (LAC 46:LIII.1103) 315
Bureau of Health Services Financing—Adult Dentures Program—Reimbursement Rate Reduction (LAC 50:XXV.701) 316
All Inclusive Care for the Elderly—Reimbursement Rate Reduction (LAC 50:XXIII.1301) 316
Ambulatory Surgical Centers—Reimbursement Rate Reduction (LAC 50:XI.7503) 316
Behavioral Health Services—Statewide Management Organization—Adults Capitated Payment Reduction (LAC 50:XXXIII.501) 317
Children's Behavioral Health Services—Reimbursement Rate Reduction (LAC 50:XXXIII.2701) 317
Coordinated Care Network—Pharmacy Services Coverage (LAC 50:I.3507) 318
Early and Periodic Screening—Diagnosis and Treatment Program (LAC 50:XV.6501 and Chapter 67) 318
Home and Community-Based Services Waivers—Community Choices Waiver (LAC 50:XXI.8105, 8301, 8302, 8305, 8307, 8311, 8313, 8315, 8321, 8323, 8501, 8701, 8901, 8903, 9301, 9303, 9501, and 9503) 319
Inpatient Hospital Services—Free-Standing Psychiatric Hospitals—Low Income and Needy Care Collaboration (LAC 50:V.959) 323
Inpatient Hospital Services—Major Teaching Hospitals—Qualifying Criteria (LAC 50:V.1301-1309) 323
Intermediate Care Facilities for Persons with Developmental Disabilities—Public Facilities Reimbursement Methodology (LAC 50:VII.32965-32969) 325
Outpatient Hospital Services—Non-Rural, Non-State Hospitals—Children's Specialty Hospitals (LAC 50:V.5109) 327
Office of Aging and Adult Services—All Inclusive Care for the Elderly—Reimbursement Rate Reduction (LAC 50:XXIII.1301) 316
Home and Community-Based Services Waivers—Community Choices Waiver (LAC 50:XXI.8105, 8301, 8302, 8305, 8307, 8311, 8313, 8315, 8321, 8323, 8501, 8701, 8901, 8903, 9301, 9303, 9501, and 9503) 319
Office of Behavioral Health—Behavioral Health Services—Statewide Management Organization Adults Capitated Payment Reduction (LAC 50:XXXIII.501) 317
Children's Behavioral Health Services—Reimbursement Rate Reduction (LAC 50:XXXIII.2701) 317
Natural Resources
Office of Coastal Management—Public Hearings and Notices (LAC 43:I.723, 727 and 728) 327
Public Safety and Corrections
Gaming Control Board—Truck Stop Travel Lanes (LAC 42:XI.2415) 329
Revenue
Policy Services Division—Withholding by Professional Athletic Teams (LAC 61:I.1520) 329
Wildlife and Fisheries
Wildlife and Fisheries Commission—Reef Fish Harvest (LAC 76:VII.335) 330
Workforce Commission
Office of Workers' Compensation—Electronic Medical Billing and Payment Companion Guide (LAC 40:I.305 and 306) 331

IV. NOTICES OF INTENT
Agriculture and Forestry
Office of Agricultural and Environmental Sciences, Seed Commission—Labeling and Testing (LAC 7:XIII.Chapter 1) 351
Office of Agricultural and Environmental Sciences, Structural Pest Control Commission—Termite Control Trench and Treat (LAC 7:XXV.141) 358
Culture, Recreation, and Tourism
Office of State Parks—State Parks (LAC 25:IX.Chapters 3, 5, 9, and 11 and XI.Chapter 5) 359
Education
Board of Elementary and Secondary Education—Bulletin 130—Regulations for the Evaluation and Assessment of School Personnel (LAC 28:CXLVII.105, 301, 303, 305, 325, 701, and 905) 368

Environmental Quality
Office of the Secretary, Legal Division—2012 Annual Incorporation by Reference of Certain Federal Air Quality Regulations (LAC 33:III.506, 507, 2160, 3003, 5116, 5122, 5311 and 5901)(AQ337ft) 372
Regulated New Source Review (NSR) Pollutant (LAC 33:III.509)(AQ340ft) 375
Governor
Real Estate Appraisers Board—Real Estate—Appraisal Management Companies (LAC 46:LXVII.30302, 30401, 30501, 30900, and 31101) 376
Health and Hospitals
Board of Dentistry—Reuse of Toothbrush; Continuing Education Requirements; Examination of Dentists (LAC 46:XXXIII.305, 1611, and 1709) 378
Bureau of Health Services Financing—Laboratory and Radiology Services—Reimbursement Rate Reduction (LAC 50:XIX.4329 and 4334-4337) 380
LaCHIP Affordable Plan—Dental Program—Reimbursement Rate Reduction (LAC 50:III.20509) 381
Medical Transportation Program—Emergency Ambulance Services—Reimbursement Rate Reduction (LAC 50:XXVII.325 and 353) 383
Nursing Facilities—Per Diem Rate Reduction (LAC 50:II.20005) 384
Pediatric Day Health Care Program—Reimbursement Rate Reduction (LAC 50:XV.28101) 385
Personal Care Services—Long Term—Reimbursement Rate Reduction (LAC 50:XV.12917) 387
Office of Aging and Adult Services—Personal Care Services—Long Term—Reimbursement Rate Reduction (LAC 50:XV.12917) 387
Natural Resources
Office of Conservation—Statewide Order No. 29-B—Hydraulic Fracture—Stimulation Operations (LAC 43:XIX.118) 388
Treasury
Board of Trustees of the Municipal Police Employees' Retirement System—Internal Revenue Code Provisions (LAC 58:XVIII.Chapter 1) 389
Wildlife and Fisheries
Wildlife and Fisheries Commission—General and Wildlife Management Area Hunting Rules and Regulations (LAC 76:XIX.111) 397
Resident Game Hunting Season (LAC 76:XIX.101 and 103) 413
Restricted Amphibians and Reptiles (LAC 76:XV.101) 419
Workforce Commission
Office of Unemployment Insurance—Appealed Claims for Board of Review (LAC 40:IV.109 and 113) 420
Benefits for Unemployment Insurance (LAC 40:IV.Chapter 3) 422
Unemployment Insurance (LAC 40:IV.Chapter 3) 426

V. COMMITTEE REPORTS
Senate
Senate Committee on Health and Welfare—Report of the Senate Health and Welfare Committee Emergency Rule Oversight Hearing on Rule Changes Proposed by the Board of Pharmacy (LAC 46:LIII.Chapter 25) 432

VI. POTPOURRI
Environmental Quality
Office of the Secretary, Legal Division—2010 Sulfur Dioxide (SO2) National Ambient Air Quality Standards (NAAQS)—State Implementation Plan (SIP) Revisions 433
Governor
Division of Administration, Office of State Purchasing—Pre-Printed Contract Forms; Clauses; Approval (LAC 34:I.5515) 433
Health and Hospitals
Office of the Secretary—Stop Order—Added Controlled Dangerous Substance 434
Natural Resources
Office of Conservation—Class III (Solution-Mining) Injection Wells 435
Electric Well Logs (LAC 43:XIX.107 and 1305) 435
Orphaned Oilfield Sites 436
Office of the Secretary, Fishermen's Gear Compensation Fund—Latitude/Longitude Coordinates 436

VII. INDEX 437

Executive Orders

EXECUTIVE ORDER BJ 13-02

Carry-Forward Bond Allocation 2012

WHEREAS, pursuant to the Tax Reform Act of 1986 and Act 51 of the 1986 Regular Session of the Louisiana Legislature (hereafter "Act"), Executive Order No. BJ 2008-47 was issued to establish a method for allocating bonds subject to private activity bond volume limits, including the method of allocating bonds subject to

(1) the private activity bond volume limits for the calendar year 2008 and subsequent calendar years;

(2) the procedure for obtaining an allocation of bonds under the ceiling; and

(3) a system of central record keeping for such allocations;

WHEREAS, Section 4(H) of No. BJ 2008-47 provides that if the ceiling for a calendar year exceeds the aggregate amount of bonds subject to the private activity bond volume limit issued during the year by all issuers, by executive order, the Governor may allocate the excess amount to issuers or an issuer for use as a carry-forward for one or more carry-forward projects permitted under the Act;

WHEREAS, the sum of four hundred thirty-four million six hundred and nine thousand four hundred twenty dollars ($434,609,420) represents the amount of the ceiling determined by the staff of the Louisiana State Bond Commission ("SBC") for private activity bond volume limits for the year 2012 ("2012 Ceiling");

WHEREAS, Executive Order No. BJ 2012-23, issued on October 31, 2012, allocated sixteen million dollars ($16,000,000) from the 2012 ceiling to the Louisiana Local Government Environmental Facilities and Community Development Authority to be used for the financing by BFNO Properties LLC of the acquisition, rehabilitation and equipping of a 272 -unit residential rental facility for individuals and families of low and moderate income located in New Orleans, Louisiana and $200,000 was returned unused to the ceiling.

WHEREAS, four hundred eighteen million six hundred nine thousand four hundred twenty dollars ($418,609,420) of the 2012 Ceiling was not allocated during the 2012 calendar year; and two hundred thousand dollars ($200,000) of the 2012 Ceiling was returned; and

WHEREAS, The SBC has determined that four hundred eighteen million eight hundred nine thousand four hundred and twenty dollars ($418,809,420) of the excess 2012 Ceiling is eligible as carry-forward and the Governor desires to allocate this amount as carry-forward for projects which are permitted and eligible under the Act;

NOW THEREFORE, I, BOBBY JINDAL, Governor of the State of Louisiana, by virtue of the authority vested by the Constitution and the laws of the State of Louisiana, do hereby order and direct as follows:

SECTION 1: Pursuant to and in accordance with the provisions of Section 146(f) of the Internal Revenue Code of 1986, as amended, and in accordance with the requests for carry-forward filed by the designated issuers, the excess private activity bond volume limit under the 2012 Ceiling is hereby allocated to the following issuer(s), for the following carry-forward project(s), and in the following amount(s):

Issuer	Carry-Forward Project	Carry-Forward Amount
Louisiana Public Facilities Authority	Louisiana Pellets, Inc.	$300,000,000
Louisiana Housing Corporation	Multifamily Mortgage Revenue Bonds	$118, 809, 420

SECTION 2: All references in this Order to the singular shall include the plural, and all plural references shall include the singular.

SECTION 3: This Order is effective upon signature and shall remain in effect until amended, modified, terminated, or rescinded by the Governor, or terminated by operation of law.

IN WITNESS WHEREOF, I have set my hand officially and caused to be affixed the Great Seal of the State of Louisiana, at the Capitol, in the City of Baton Rouge, on this 8th day of February, 2013.

Bobby Jindal
Governor

ATTEST BY
THE GOVERNOR
J. Thomas Schedler
Secretary of State
1302#116

Emergency Rules

DECLARATION OF EMERGENCY

Department of Agriculture and Forestry
Office of Agricultural and Environmental Sciences
Structural Pest Control Commission

Minimum Specifications for Bait and Baiting Requirements
(LAC 7:XXV.141)

In accordance with the emergency provisions of the Administrative Procedure Act, R.S. 49:953(B), and under the authority of R.S. 3:3366, the Structural Pest Control Commission declares an emergency to exist and request the adoption by emergency process the attached regulations to supersede the current permanent regulations found at LAC 7:XXV.141. The regulations being put into place by this Declaration of Emergency are in the process of being promulgated as permanent rules and are anticipated to become effective upon completion of promulgation. The implementation of these regulations by the emergency process is necessary in order to require pest control operators in Louisiana who install and monitor above ground bait and baiting systems for termites to monitor them at least quarterly. Some current above ground bait stations do not require a specific monitoring timeframe. Under the current regulations, there are no requirements to monitor the above ground bait stations except as required by each label. The implementation of these rules will allow pest control operators to immediately use a new above ground bait product and require them to monitor them on a specific timeframe, thereby increasing the amount of termite protections that they can offer to the public to protect homes and other structures from infestation by subterranean termites.

These emergency rules become effective on the signature of the commissioner, January 15, 2013, and shall remain in effect for 120 days, unless renewed or until the permanent rules and regulations become effective.

Title 7
AGRICULTURE AND ANIMALS
Part XXV. Structural Pest Control
Chapter 1. Structural Pest Control Commission
§141. Minimum Specifications for Termite Control Work

A. - J.3. …

4. Above ground bait stations shall be used according to their label and labeling when the presence of subterranean termites are detected in the contracted structure and shall be monitored not less than quarterly.

J.5. - K.1. …

2. Combination of liquid spot and bait and baiting systems treatments shall be used according to label and labeling. Above ground bait stations shall be monitored not less than quarterly.

3. - 8.a. …

b. Above ground bait stations shall be monitored not less than quarterly.

K.9. - M.9. …

AUTHORITY NOTE: Promulgated in accordance with R.S. 3:3366.

HISTORICAL NOTE: Promulgated by the Department of Agriculture, Structural Pest Control Commission, LR 11:330 (April 1985), amended by the Department of Agriculture and Forestry, Structural Pest Control Commission, LR 15:958 (November 1989), LR 20:644 (June 1994), LR 21:931 (September 1995), LR 23:1285 (October 1997), LR 25:235 (February 1999), LR 25:1620 (September 1999), LR 26:2437 (November 2000), LR 27:1180 (August 2001), LR 29:1063 (July 2003), LR 30:1145 (June 2004), repromulgated LR 30:1614 (August 2004), amended LR 35:207 (February 2009), LR 35:1469 (August 2009), repromulgated LR 35:1872 (September 2009), amended, LR 37:286 (January 2011), LR 39:

Mike Strain, DVM
Commissioner

1302#003

DECLARATION OF EMERGENCY

Department of Agriculture and Forestry
Office of Agricultural and Environmental Sciences
Structural Pest Control Commission

Minimum Specifications for Trench and Treat Termite Control Work (LAC 7:XXV.141)

In accordance with the emergency provisions of the Administrative Procedure Act, R.S. 49:953(B), and under the authority of R.S. 3:3203, the commissioner of agriculture and forestry has exercised the emergency provision of the Administrative Procedure Act to adopt LAC 7:XXV.141. This declaration is necessary to extend the original Emergency Rule effective October 3, 2012, since it is effective for a maximum of 120 days and will expire on January 30, 2013, before the final Rule takes effect. This Emergency Rule extension will become effective on January 30, 2013 and will remain in effect for 120 days.

The commissioner declares an emergency to exist and requests the adoption by emergency process the attached regulations to supersede the current permanent regulations found at LAC 7:XXV.141. The regulations being put into place by this Declaration of Emergency are in the process of being promulgated as permanent rules and are anticipated to become effective upon completion of promulgation.

The implementation of these regulations by the emergency process is necessary in order to require pest control operators in Louisiana who use termiticides approved by the SPCC, to calculate the termiticide and water mixture for a minimum of a 12 inch depth application in the trench when using the trench and treat requirements on the termiticide labels. The implementation of these rules will clarify label requirements that have been industry standards and used in this fashion for many years, but were not specifically required on the federal labels or by the SPCC rules. Louisiana has a significant Formosan Subterranean Termite (FST) population. FST cause tremendous damage to homes each year. This rule will

assure homeowners and other structure owners that they are obtaining the best scientific protection. With this rule change, the Department and the SPCC are continuing to protect the public by preventing homes and other structures from infestation by subterranean termites.

Title 7
AGRICULTURE AND ANIMALS
Part XXV. Structural Pest Control
Chapter 1. Structural Pest Control Commission
§141. Minimum Specifications for Termite Control Work

A. - A.2. …

B. Requirements for Trench and Treat

1. Calculations made for the rate and volume of the termiticide mixture being applied in all trenches shall be based on a minimum of 1 foot of depth.

2. All trenches shall be a minimum of 4 inches wide at the top angled toward the foundation and a minimum of 6 inches deep in order to permit application of the required chemical.

3. Application of the product mixture into the trench shall be made at the rate and manner prescribed on the label and labeling.

4. Rodding shall be acceptable only when trenching will damage irrigation equipment, flowers and/or shrubs.

C. - I.2.c. …

3. The requirements specified in Section 141.B.1-3 shall not be waived.

J. - M.9. …

AUTHORITY NOTE: Promulgated in accordance with R.S. 3:3366.

HISTORICAL NOTE: Promulgated by the Department of Agriculture, Structural Pest Control Commission, LR 11:330 (April 1985), amended by the Department of Agriculture and Forestry, Structural Pest Control Commission, LR 15:958 (November 1989), LR 20:644 (June 1994), LR 21:931 (September 1995), LR 23:1285 (October 1997), LR 25:235 (February 1999), LR 25:1620 (September 1999), LR 26:2437 (November 2000), LR 27:1180 (August 2001), LR 29:1063 (July 2003), LR 30:1145 (June 2004), repromulgated LR 30:1614 (August 2004), amended LR 35:207 (February 2009), LR 35:1469 (August 2009), repromulgated LR 35:1872 (September 2009), amended LR 37:286 (January 2011), amended by the Department of Agriculture and Forestry, Office of Agriculture and Environmental Sciences, Structural Pest Control Commission, LR 39:

Mike Strain, DVM
Commissioner

1302#004

DECLARATION OF EMERGENCY

Department of Agriculture and Forestry
Office of Agricultural and Environmental Sciences
Structural Pest Control Commission

Wood Destroying Insect Report and Requests for Rule Changes or Declaratory Rulings
(LAC 7:XXV.101, 121, 165 and 167)

In accordance with the emergency provisions of the Administrative Procedure Act, R.S. 49:953(B), and under the authority of R.S. 3:3203, the commissioner of agriculture and forestry has exercised the emergency provision of the Administrative Procedure Act to amend LAC 7:XXV.101 and 121 and adopt LAC 7:XXV.165 and 167. This declaration is necessary to extend the original Emergency Rule effective September 26, 2012, since it is effective for a maximum of 120 days and will expire on January 23, 2013, before the final Rule takes effect. This Emergency Rule extension will become effective on January 23, 2013 and will remain in effect for 120 days.

The commissioner declares an emergency to exist and requests the adoption by emergency process the attached regulations to supersede the current permanent regulations found at LAC 7:XXV.101 and 121. The regulations being put into place by this Declaration of Emergency are in the process of being promulgated as permanent rules and are anticipated to become effective upon completion of promulgation.

The implementation of these regulations by the emergency process is necessary in order to afford pest control operators in Louisiana the ability to seek a ruling from the Structural Pest Control Commission (commission) regarding any law or rule under the purview of the commission. Permitting the pest control operators to clarify any laws or regulations will offer the public protection from potentially harmful applications of termiticides. Under the current regulations, there is not a process in which a pest control operator may seek relief from the commission. The implementation of these rules will allow pest control operators to petition for a rule change or declaratory relief which will offer an administrative due process avenue in which pest control operators may seek guidance. The implementation of these rules will additionally clarify provisions related to wood destroying inspect reports thereby protecting the consumers from reliance on the reports.

Title 7
AGRICULTURE AND ANIMALS
Part XXV. Structural Pest Control
Chapter 1. Structural Pest Control Commission
§101. Definitions

A. - B. …

* * *

Rule—as defined in R.S. 49:951(6).

* * *

Wood Destroying Insect Report (WDIR—a document approved by the Structural Pest Control Commission issued by a pest control operator only for inspections made to determine the presence of wood destroying insects for acts of sale or refinance of structures. A wood destroying insect report shall not be renewable or issued for any other purpose.

AUTHORITY NOTE: Promulgated in accordance with R.S. 3:3362.

HISTORICAL NOTE: Promulgated by the Department of Agriculture, Structural Pest Control Commission, LR 11:323 (April 1985), amended by the Department of Agriculture and Forestry, Structural Pest Control Commission LR 15:954 (November 1989), 17:251 (March 1991), LR 23:855 (July 1997), LR 30:1143 (June 2004), amended by the Department of Agriculture and Forestry, Office of Agriculture and Environmental Sciences, LR 31:26 (January 2005), amended by the Department of Agriculture and Forestry, Structural Pest Control Commission, LR 32:796 (May 2006), repromulgated LR 32:1015 (June 2006), amended LR 33:39 (January 2007), LR 35:204 (February 2009), LR 35:1468 (August 2009), LR 37:272 (January 2011), LR 39:

§121. Wood Destroying Insect Report

A. A wood destroying insect report approved by the commission shall be issued only for inspections made to determine the presence of wood destroying insects for acts of sale or refinance of structures. A wood destroying insect report shall not be renewable or issued for any other purpose.

B. A wood destroying insect report shall be issued by a person who is licensed by the commission in termite control or a certified WDIR technician who is working under the supervision of a person who is licensed by the commission in termite control. The report shall carry a guarantee that the property will be treated without charge should live wood destroying insects covered by the report be found within 90 days from the date of inspection. The presence of frass will be acceptable as evidence of a live infestation of power post beetles; however, frass shall be exuding or streaming from the holes on the outside of the wood.

B.1. - D.2. …

AUTHORITY NOTE: Promulgated in accordance with R.S. 3:336.

HISTORICAL NOTE: Promulgated by the Department of Agriculture, Structural Pest Control Commission, LR 12:285 (May 1986), amended by the Department of Agriculture and Forestry, Structural Pest Control Commission, LR 23:856 (July 1997), LR 24:631 (April 1998), LR 25:235 (February 1999), LR 25:829 (May 1999), amended by the Department of Agriculture and Forestry, Office of Agriculture and Environmental Sciences, LR 31:26 (January 2005), amended by the Department of Agriculture and Forestry, Structural Pest Control Commission, LR 32:797 (May 2006), repromulgated LR 32:1017 (June 2006), amended LR 37:282 (January 2011), LR 39:

§165. Requests for Adoption, Amendment, or Repeal of a Rule

A. Any interested person may, pursuant to R.S. 49:953(C), request the commission to adopt, amend, or repeal a rule (rule change) that the commission has the authority to make.

B. A request for a rule change shall be in writing and shall contain the following information:

1. a draft of the proposed wording of the requested rule change or a statement detailing the content of the requested rule change;

2. the name, address, telephone number, fax number and e-mail address of the requesting party.

C. The request for a rule change shall be addressed to the commission and shall be mailed or delivered to 5825 Florida Boulevard, Baton Rouge, LA 70806.

D. The commission shall consider the request as follows.

1. A request for rule change shall be considered by the commission within a reasonable time, not to exceed 90 days.

a. Notice of the meeting at which the request is to be considered shall be provided to the person submitting the request.

b. Failure of the requesting party to attend the meeting for purposes of discussing the proposed rule change may be cause for the request to be denied by the commission.

c. The request, with the consent of the requesting party, may be taken under consideration or action deferred pending further information. If the matter is taken under consideration or action is deferred then it will be taken up again at the next regularly scheduled meeting of the commission or at a special meeting.

E. Any decision by the commission shall be in writing and shall state the reasons for the denial or action. Such notice may be delivered by hand, mail, electronically or by any other means reasonably assured to provide notice to the requesting party.

AUTHORITY NOTE: Promulgated in accordance with R.S. 3:3366 and R.S. 49:953(C).

HISTORICAL NOTE: Promulgated by the Department of Agriculture and Forestry, Structural Pest Control Commission, LR 39:

§167. Procedures for Declaratory Orders and Rulings

A. This rule provides for the filing and prompt disposition of requests for declaratory orders and rulings as to the applicability of any statutory provision or as to the applicability of any rule or order of the commission, as required by R.S. 49:962 and 49:963(D).

B. A request for a declaratory order or ruling shall be in writing and shall contain the following information:

1. a citation to the specific statutory provision, rule or order that will be the subject of the declaratory order or ruling;

2. a concise statement of why the declaratory order or ruling is being requested;

3. a list of all persons that the requesting party may call to testify and a list of all documents that may be submitted as evidence, if a hearing is called to take evidence;

4. the name, address, telephone number, fax number and email address of the requesting party, either printed or written in legible form.

C. The request for a declaratory order or ruling shall be addressed to the commission and shall be mailed or delivered to 5825 Florida Boulevard, Baton Rouge, LA 70806.

D. The commission shall consider the request as follows.

1. The request shall be considered by the commission within a reasonable time, not to exceed 90 days.

2. Notice of the meeting at which the request is to be considered shall be provided to the person submitting the request.

E. The commission's decision shall be sent to the requesting party either by:

1. certified mail, return receipt requested;

2. hand delivery; or

3. commercial courier.

F. Failure of the requesting party, after notice, to attend any hearing or meeting regarding the request may be cause for the request to be denied.

AUTHORITY NOTE: Promulgated in accordance with R.S. 3:3366 and R.S. 49:953(C).

HISTORICAL NOTE: Promulgated by the Department of Agriculture and Forestry, Structural Pest Control Commission, LR 39:

Mike Strain, DVM
Commissioner

1302#005

DECLARATION OF EMERGENCY

Department of Children and Family Services
Economic Stability Section

Drug Screening, Energy Assistance,
and Substance Abuse Treatment Programs
(LAC 67:III.1249, 1290, 1291, and 5563)

The Department of Children and Family Services (DCFS) has exercised the emergency provisions of the Administrative Procedure Act, R.S. 49:953 (B) to amend LAC 67:III, Subpart 2 Family Independence Temporary Assistance Program (FITAP), Chapter 12, Subchapter B, Section 1249, repeal Subchapter D, Sections 1290 and 1291; and amend Subpart 15 Temporary Assistance for Needy Families (TANF) Initiatives, Chapter 55, Section 5563. This Emergency Rule shall be adopted effective February 1, 2013, and shall remain in effect for a period of 120 days.

Pursuant to HB 1, the Department of Children and Family Services is authorized to promulgate emergency rules to facilitate the expenditure of Temporary Assistance for Needy Families (TANF) funds. Adjustments to Section 1249 of FITAP Conditions of Eligibility and Section 5563 of TANF Initiatives, and the elimination of FITAP Special Initiatives Sections 1290 and 1291 are necessary to facilitate the expenditure of Louisiana's TANF Grant. Section 1249, Drug Screening, Testing, Education and Rehabilitation Program is being amended for clarification. The drug screening of FITAP applicants/recipients will no longer be contracted with the Department of Health and Hospitals (DHH), Office of Behavioral Health, but will be performed statewide by DCFS staff. Section 5563 Substance Abuse Treatment Program for Needy Families is amended to mirror Section 1249 in that DCFS will provide statewide drug screening services and continue to fund non-medical treatment to TANF-eligible individuals through partnership with DHH, Office of Behavioral Health. Section 1290 Energy Assistance and Section 1291 Substance Abuse Treatment Program are being repealed.

The department considers emergency action necessary to facilitate the expenditure of TANF funds.

Title 67
SOCIAL SERVICES
Part III. Economic Stability
Subpart 2. Family Independence Temporary Assistance Program
Chapter 12. Application, Eligibility, and Furnishing Assistance
Subchapter B. Conditions of Eligibility
§1249. Drug Screening, Testing, Education and Rehabilitation Program

A. ...

B. Screening and Referral Process. All adult applicants for and recipients of FITAP will be screened for the use of or dependency on illegal drugs at initial application and redetermination of eligibility using a recognized and standardized drug abuse screening test.

1. When the screening process indicates that there is a reason to suspect that a recipient is using or dependent on illegal drugs, or when there is other evidence that a recipient is using or dependent on illegal drugs, the caseworker will refer the recipient to the Department of Health and Hospitals, Office of Behavioral Health (OBH) to undergo a formal substance abuse assessment which may include urine testing. The referral will include a copy of the screening form, a copy of the Release of Information Form, and a photograph of the individual for identification purposes.

2. Additionally, if at any time DCFS has reasonable cause to suspect that a recipient is using or dependent on illegal drugs based on direct observation or if DCFS judges to have reliable information of use or dependency on illegal drugs received from a reliable source, the caseworker will refer the recipient to OBH to undergo a formal substance abuse assessment which may include urine testing. All such referrals will require prior approval by the supervisor of the caseworker.

3. OBH will advise DCFS of the results of the formal assessment. If the formal assessment determines that the recipient is not using or dependent on illegal drugs, no further action will be taken unless subsequent screening or other evidence indicates a reasonable suspicion of illegal drug dependency or use. If the formal assessment determines that the recipient is using or dependent on illegal drugs, OBH will determine the extent of the problem and recommend the most appropriate and cost effective method of education and rehabilitation. The education or rehabilitation plan will be provided by OBH or by a contract provider and may include additional testing and monitoring. The OBH assessment will include a determination of the recipient's ability to participate in activities outside of the rehabilitation program.

C. Child care and transportation costs required for participation in the Drug Screening, Testing, Education And Rehabilitation Program will be paid by DCFS.

D. If residential treatment is recommended by OBH and the recipient is unable to arrange for the temporary care of dependent children, DCFS and/or OBH will coordinate with the DCFS, Child Welfare Section, to arrange for the care of such children.

1. - 2. ...

F. If after completion of education and rehabilitation, the recipient is subsequently determined to use or be dependent on illegal drugs, the recipient will be ineligible for FITAP cash benefits until such time that OBH determines that the individual has successfully completed the recommended education and rehabilitation program and is drug free. The eligibility of other family members will not be affected as long as the individual participates in the Education And Rehabilitation Program.

AUTHORITY NOTE: Promulgated in accordance with 42 U.S.C. 601 et seq., R.S. 36:474, R.S. 46:231.1.B, Act 58, 2003 Reg. Session.

HISTORICAL NOTE: Promulgated by the Department of Social Services, Office of Family Support, LR 25:2453 (December 1999), amended LR 30:495 (March 2004), amended by the Department of Children and Family Services, LR 39:

Subchapter D. Special Initiatives
§1290. Energy Assistance

Repealed.

AUTHORITY NOTE: Promulgated in accordance with 42 U.S.C. 601 et seq.; R.S. 36:474 and 46:231; and Act 12, 2001 Reg. Session.

HISTORICAL NOTE: Promulgated by the Department of Social Services, Office of Family Support, LR 28:103 (January 2002), repealed by the Department of Children and Family Services, LR 39:

§1291. Substance Abuse Treatment Program

Repealed.

AUTHORITY NOTE: Promulgated in accordance with 42 U.S.C. 601 et seq.; R.S. 36:474 and 46:231; and Act 12, 2001 Reg. Session, Act 16, 2005 Reg. Session.

HISTORICAL NOTE: Promulgated by the Department of Social Services, Office of Family Support, LR 28:1492 (June 2002), amended LR 32:1912 (October 2006), repealed by the Department of Children and Family Services, LR 39:

Subpart 15. Temporary Assistance for Needy Families (TANF) Initiatives

Chapter 55. TANF Initiatives

§5563. Substance Abuse Treatment Program for Needy Families

A. The Department for Children and Family Services (DCFS) shall enter into a Memorandum of Understanding with the Department of Health and Hospitals, Office of Behavioral Health (OBH) wherein DCFS shall fund the cost of substance abuse non-medical treatment of members of needy families to the extent that funds are available commencing June 1, 2002.

B. ...

C. Eligibility for services is limited to needy families, that is, a family in which any member receives a Family Independence Temporary Assistance Program (FITAP) grant, Kinship Care Subsidy Program (KCSP) grant, Supplemental Nutrition Assistance Program (SNAP) benefits, Child Care Assistance Program (CCAP) services, Medicaid, Louisiana Children's Health Insurance Program (LaChip) benefits, Supplemental Security Income (SSI), Free or Reduced Lunch, or who has earned income at or below 200 percent of the federal poverty level. A needy family includes a minor child living with a custodial parent or caretaker relative who has earned income at or below 200 percent of the federal poverty level.

D. ...

AUTHORITY NOTE: Promulgated in accordance with 42 U.S.C. 601 et seq.; R.S. 46:231 and R.S. 36:474; Act 13, 2002 Reg. Session, Act 18, 2007 Reg. Session.

HISTORICAL NOTE: Promulgated by the Department of Social Services, Office of Family Support, LR 29:190 (February 2003), amended LR 31:486 (February 2005), LR 34:696 (April 2008), amended by the Department of Children and Family Services, LR 39:

Suzy Sonnier
Secretary

1302#014

DECLARATION OF EMERGENCY

Department of Health and Hospitals
Board of Pharmacy

Compounding for Prescriber Use (LAC 46:LIII.2535)

The Louisiana Board of Pharmacy is exercising the emergency provisions of the Administrative Procedure Act, specifically at R.S. 49:953(B), to amend certain portions of its rules permitting pharmacists to compound medications intended for administration by practitioners without the necessity of a patient-specific prescription.

The board has taken note of the recent tragedies associated with fungal meningitis traced to a compounding pharmacy in Massachusetts. Further, the board has learned there are other similar types of pharmacies operating across the country that are licensed to do business in Louisiana. Some of these pharmacies specialize in the large-scale preparation of drug products as opposed to compounding medications pursuant to patient-specific prescriptions.

The preparation of drug products intended for use in the general population in the United States is governed by federal laws and rules administered by the federal Food and Drug Administration (FDA). Drug manufacturers are credentialed and regulated by that federal agency, and their manufacturing activities are required to comply with a set of quality and safety standards generally known as current good manufacturing practices (cGMP). There are provisions within the federal laws and rules that permit state licensed pharmacies to prepare drug products in response to patient specific prescriptions. Louisiana-licensed pharmacies engaged in the compounding of drug preparations in response to such prescriptions are required to comply with the set of quality and safety standards published in the United States Pharmacopeia (USP). By comparison, the USP standards are less stringent than the cGMP standards.

The board's current rule permitting pharmacies to compound products for prescriber use without a patient-specific prescription contain no limits on products prepared by pharmacies intended for that general use. As evidenced by the tragedies referenced earlier, there are risks associated with pharmacies engaged in manufacturing activities while adhering to compounding standards. In an effort to mitigate that risk for Louisiana residents, the board proposes to limit a pharmacy's product preparation intended for general use (including prescriber use) to 10 percent of its total dispensing and distribution activity. With respect to a pharmacy's total dispensing and distribution activity for Louisiana residents, the board proposes a minimum of ninety percent be accomplished in response to patient-specific prescriptions and no more than ten percent for prescriber use in response to purchase orders.

The board has determined this Emergency Rule is necessary to prevent imminent peril to the public health, safety, and welfare. The Declaration of Emergency is effective January 31, 2013, and shall remain in effect for the maximum time period allowed under the Administrative Procedure Act or until adoption of the final Rule, whichever shall first occur.

Title 46
PROFESSIONAL AND OCCUPATIONAL STANDARDS
Part LIII. Pharmacists

Chapter 25. Prescriptions, Drugs, and Device

Subchapter C. Compounding of Drugs

§2535. General Standards

A - C. …

D. Compounding for Prescriber's Use. Pharmacists may prepare practitioner administered compounds for a prescriber's use with the following requirements:

1. - 3. …

4. a pharmacy may prepare such products not to exceed ten percent of the total number of drug dosage units dispensed and distributed by the pharmacy on an annual basis.

E. …

F. Compounding Commercial Products Not Available. A pharmacy may prepare a copy of a commercial product when that product is not available as evidenced by either of the following:

1. products appearing on a website maintained by the federal Food and Drug Administration (FDA) and/or the American Society of Health-System Pharmacists (ASHP);

2. products temporarily unavailable from distributors, as documented by invoice or other communication from the distributor.

G. Labeling of Compounded Products

1. For patient-specific compounded products, the labeling requirements of R.S. 37:1225, or its successor, as well as this Chapter, shall apply.

2. All practitioner administered compounds shall be packaged in a suitable container with a label containing, at a minimum, the following information:

a. pharmacy's name, address, and telephone number;

b. practitioner's name;

c. name of preparation;

d. strength and concentration;

e. lot number;

f. beyond use date;

g. special storage requirements, if applicable;

h. assigned identification number; and

i. pharmacist's name or initials.

AUTHORITY NOTE: Promulgated in accordance with R.S. 37:1182.

HISTORICAL NOTE: Promulgated by the Department of Health and Hospitals, Board of Pharmacy, LR 14:708 (October 1988), effective January 1, 1989, amended LR 23:1316 (October 1997), LR 29:2105 (October 2003), effective January 1, 2004, LR 39:

Malcolm J. Broussard
Executive Director

1302#012

DECLARATION OF EMERGENCY

Department of Health and Hospitals
Bureau of Health Services Financing
and
Office of Behavioral Health

Behavioral Health Services—Supplemental Payments
(LAC 50:XXXIII.Chapter 161)

The Department of Health and Hospitals, Bureau of Health Services Financing and the Office of Behavioral Health adopts LAC 50:XXXIII.Chapter 161 in the Medical Assistance Program as authorized by R.S. 36:254 and pursuant to Title XIX of the Social Security Act. This Emergency Rule is promulgated in accordance with the provisions of the Administrative Procedure Act, R.S. 49:953(B)(1) et seq., and shall be in effect for the maximum period allowed under the Act or until adoption of the final Rule, whichever occurs first.

The Department of Health and Hospitals, Bureau of Health Services Financing adopted provisions to implement a coordinated behavioral health services system under the Medicaid Program which provides coverage of behavioral health services to children and adults through the Louisiana Behavioral Health Partnership (*Louisiana Register*, Volume 38, Number 2).

The Department of Health and Hospitals, Bureau of Health Services Financing and the Office of Behavioral Health propose to amend the provisions governing behavioral health services in order to establish supplemental Medicaid payments for state-owned and operated behavioral health providers. This action is being taken to promote the health and welfare of Medicaid recipients by encouraging continued provider participation in the Medicaid Program and to ensure recipient access to behavioral health services. It is estimated that implementation of this Emergency Rule will increase expenditures in the Medicaid Program by approximately $924,161 for state fiscal year 2012-2013.

Effective January 20, 2013, the Department of Health and Hospitals, Bureau of Health Services Financing and the Office of Behavioral Health adopt provisions to establish supplemental Medicaid payments for state-owned and operated behavioral health providers.

Title 50

PUBLIC HEALTH—MEDICAL ASSISTANCE

Part XXXIII. Behavioral Health Services

Subpart 17. Supplemental Payments

Chapter 161. General Provisions

§16101. Qualifying Criteria

A. Effective for dates of service on or after January 20, 2013, providers of behavioral health services may qualify for supplemental payments for services rendered to Medicaid recipients. To qualify for the supplemental payment, the behavioral health provider must be:

1. licensed as necessary by the state of Louisiana;

2. enrolled as a Medicaid provider; and

3. a government-owned and operated entity or a quasi-governmental entity.

B. Providers of the following services shall be eligible to receive supplemental payments:

1. providers furnishing services thru a statewide management organization;

2. children’s mental health services;

3. behavioral health services;

4. home and community-based waiver services;

5. psychiatric residential treatment facility services;

6. therapeutic group home services;

7. substance abuse services; and

8. local government juvenile justice programs.

AUTHORITY NOTE: Promulgated in accordance with R.S. 36:254 and Title XIX of the Social Security Act.

HISTORICAL NOTE: Promulgated by the Department of Health and Hospitals, Bureau of Health Services Financing and the Office of Behavioral Health, LR 39:

§16103. Payment Methodology

A. The supplemental payment shall be calculated in a manner that will bring payments for these services up to the community rate level.

1. For purposes of these provisions, the community rate shall be defined as the rates paid by commercial payers for the same service.

B. The behavioral health provider shall periodically furnish satisfactory data for calculating the community rate as requested by the department.

C. The supplemental payment amount shall be determined by establishing a Medicare to community rate conversion factor for the behavioral health provider. At the

end of each quarter, for each Medicaid claim paid during the quarter, a Medicare payment amount will be calculated and the Medicare to community rate conversion factor will be applied to the result. Medicaid payments made for the claims paid during the quarter will then be subtracted from this amount to establish the supplemental payment amount for that quarter.

1. The Medicare to community rate conversion factor shall be recalculated at least every three years.

D. The supplemental payments shall be made on a quarterly basis.

AUTHORITY NOTE: Promulgated in accordance with R.S. 36:254 and Title XIX of the Social Security Act.

HISTORICAL NOTE: Promulgated by the Department of Health and Hospitals, Bureau of Health Services Financing and the Office of Behavioral Health, LR 39:

Implementation of the provisions of this Rule may be contingent upon the approval of the U.S. Department of Health and Human Services, Centers for Medicare and Medicaid Services (CMS), if it is determined that submission to CMS for review and approval is required.

Interested persons may submit written comments to J. Ruth Kennedy, Bureau of Health Services Financing, P.O. Box 91030, Baton Rouge, LA 70821-9030. She is responsible for responding to inquiries regarding this Emergency Rule. A copy of this Emergency Rule is available for review by interested parties at parish Medicaid offices.

Bruce D. Greenstein
Secretary

1302#050

DECLARATION OF EMERGENCY

Department of Health and Hospitals
Bureau of Health Services Financing

Coordinated Care Network—Dental Benefits Plan
(LAC 50:I.Chapter 29)

The Department of Health and Hospitals, Bureau of Health Services Financing adopts LAC 50:Chapter 29 in the Medical Assistance Program as authorized by R.S. 36:254 and pursuant to Title XIX of the Social Security Act. This Emergency Rule is promulgated in accordance with the provisions of the Administrative Procedure Act, R.S. 49:953(B)(1) et seq., and shall be in effect for the maximum period allowed under the Act or until adoption of the final Rule, whichever occurs first.

The Department of Health and Hospitals, Bureau of Health Services Financing adopted provisions which implemented a coordinated system of care in the Medicaid Program designed to improve quality of care and health care outcomes through a healthcare delivery system called coordinated care networks, also known as the BAYOU HEALTH Program (*Louisiana Register*, Volume 37, Number 6).

The department promulgated an Emergency Rule which adopted provisions governing Medicaid coordinated care in order to establish a dental benefits plan through a coordinated care network for all Medicaid recipients under 21 years of age covered in BAYOU HEALTH [the Louisiana Medicaid Program] (*Louisiana Register*, Volume 39, Number 1).

The department now proposes to amend the provisions of the January 1, 2013 Emergency Rule in order to clarify the coverage provisions, enrollment/disenrollment criteria, and the reimbursement methodology. This action is being taken to promote the public health and welfare of Medicaid recipients by ensuring continued access to better coordinated and quality dental care services.

Effective February 20, 2013, the Department of Health and Hospitals, Bureau of Health Services Financing amends the provisions of the January 1, 2013 Emergency Rule governing Medicaid coordinated care.

Title 50
PUBLIC HEALTH—MEDICAL ASSISTANCE
Part I. Administration
Subpart 3. Medicaid Coordinated Care
Chapter 29. Coordinated Care Network Dental Benefits Plan

§2901. General Provisions

A. Effective March 1, 2013, the Department of Health and Hospitals, Bureau of Health Services Financing shall implement a dental benefits plan through a coordinated care network to provide dental services to recipients under 21 years of age.

B. A coordinated care network dental benefit plan (CCN-DBP) shall serve Medicaid fee-for-service (FFS), BAYOU HEALTH Shared Savings Plan and BAYOU HEALTH Prepaid Health Plans members.

C. Exclusion. The following individuals shall be excluded from enrollment in the CCN-DBP and will continue to receive dental services through the FFS program when appropriate:

1. individuals who are 21 years of age and older; and

2. individuals who reside in in intermediate care facilities for persons with developmental disabilities (ICFs/DD).

D. Enrollment and Disenrollment Criteria

1. The health plan shall accept all members in their health plan and shall follow the policies and procedures as specified in the contract.

2. Health plan enrollment for members in a given month will be effective at 12:01 a.m. on the first calendar day of the month of assignment.

3. Only DHH shall take action to disenroll a recipient from the health plan. All disenrollment requests must be processed in accordance with the terms and conditions of the contract.

AUTHORITY NOTE: Promulgated in accordance with R.S. 36:254 and Title XIX of the Social Security Act.

HISTORICAL NOTE: Promulgated by the Department of Health and Hospitals, Bureau of Health Services Financing, LR 39:

§2903. Participation Requirements

A. In order to participate in the Medicaid Program, a CCN-DBP must be a successful bidder, be awarded a contract with the department, and complete the readiness review.

B. A CCN-DBP must:

1. meet the federal definition of a PAHP (prepaid ambulatory health plan) as defined in 42 CFR §438;

2. meet the requirements of R.S. 22:2016 and be licensed, or have a certificate of authority from the

Louisiana Department of Insurance (DOI) pursuant to Title 22 of the *Louisiana Revised Statues*;

3. be certified by the Louisiana Secretary of State to conduct business in the state;

4. meet solvency standards as specified in federal regulations and Title 22 of the *Louisiana Revised Statutes*;

5. have a network capacity to enroll a minimum of 627,000 Medicaid and Louisiana Children's Health Insurance Program (LaCHIP) eligibles into the network; and

6. not have an actual or perceived conflict of interest that, at the discretion of the department, would interfere or give the appearance of possibly interfering with its duties and obligations under this Rule, the contract and any and all appropriate guides.

a. Conflict of interest shall include, but is not limited to, being the fiscal intermediary contractor for the department.

C. A CCN-DBP shall ensure the provision of core benefits and services to all assigned members on the day the BAYOU HEALTH DBP is implemented.

D. Upon request by the Centers for Medicare and Medicaid Services, the Office of Inspector General, the Government Accounting Office, the department or its designee, a CCN-DBP shall make all of its records pertaining to its contract (services provided there under and payment for services) with the department available for review, evaluation and audit. The records shall include, but are not limited to the following:

1. pertinent books and documents;
2. financial records;
3. medical records and documents; and
4. provider records and documents involving financial transactions related to the contract.

E. A CCN-DBP shall maintain an automated management information system that collects, analyzes, integrates, and reports data that complies with department and federal reporting requirements.

1. The CCN-DBP shall submit to the department for approval the CCN-DBP's emergency/contingency plan if the CCN-DBP is unable to provide the data reporting specified in the contract and department-issued guides.

F. A CCN-DBP shall obtain insurance coverage(s) as specified in the terms of the contract. Subcontractors, if any, shall be covered under these policies or have insurance comparable to the CCN-DBP's required coverage.

G. A CCN-DBP shall provide all financial reporting as specified in the terms of the contract.

H. A CCN-DBP shall secure and maintain a performance and fidelity bond as specified in the terms of the contract during the life of the contract.

I. In the event of noncompliance with the contract and the department's guidelines, a CCN-DBP shall be subject to the sanctions specified in the terms of the contract including, but not limited to:

1. corrective action plans;
2. monetary penalties;
3. temporary management; or
4. suspension and/or termination of the CCN-DBP's contract.

AUTHORITY NOTE: Promulgated in accordance with R.S. 36:254 and Title XIX of the Social Security Act.

HISTORICAL NOTE: Promulgated by the Department of Health and Hospitals, Bureau of Health Services Financing, LR 39:

§2905. Managed Care Organization Model Responsibilities

A. The CCN-DBP shall be responsible for the administration and management of its requirements and responsibilities under the contract with the department and any and all department issued guides. This includes all subcontracts, employees, agents and anyone acting for or on behalf of the CCN-DBP.

1. No subcontract or delegation of responsibility shall terminate the legal obligation of the CCN-DBP to the department to assure that all requirements are carried out.

B. A CCN-DBP shall possess the expertise and resources to ensure the delivery of core benefits and services to members and to assist in the coordination of covered services, as specified in the terms of the contract.

1. A CCN-DBP shall have written policies and procedures governing its operation as specified in the contract and department-issued guides.

C. A CCN-DBP shall accept enrollees in the order in which they apply without restriction.

1. A CCN-DBP shall not discriminate against enrollees on the basis of race, gender, color, national origin, age, health status, or need for health care services, and shall not use any policy or practice that has the effect of discriminating on any such basis.

D. A CCN-DBP shall be required to provide service authorization, referrals, coordination, and/or assistance in scheduling the covered services consistent with standards as defined in the Louisiana Medicaid State Plan and as specified in the terms of the contract.

E. The CCN-DBP shall establish and implement a quality assessment and performance improvement program as specified in the terms of the contract and department issued guides.

G. A CCN-DBP shall develop and maintain a utilization management program including policies and procedures with defined structures and processes as specified in the terms of the contract and department issued guides.

H. The CCN-DBP must have administrative and management arrangements or procedures, including a mandatory compliance plan, that are designed to guard against fraud and abuse.

1. The CCN-DBP shall comply with all state and federal laws and regulations relating to fraud, abuse, and waste in the Medicaid programs as well all requirements set forth in the contract and department-issued guides.

I. A CCN-DBP shall maintain a health information system that collects, analyzes, integrates, and reports data as specified in the terms of the contract and all department-issued guides.

1. A CCN-DBP shall collect data on enrollees and provider characteristics and on services furnished to members through an encounter data system as specified in the contract and all department-issued guides.

J. A CCN-DBP shall be responsible for conducting routine provider monitoring to ensure continued access to care for Medicaid recipients and compliance with departmental and contract requirements.

K. A CCN-DBP shall not engage the services of a provider who is in non-payment status with the department or is excluded from participation in federal health care programs (i.e., Medicare, Medicaid, CHIP, etc.).

L. Medical records shall be maintained in accordance with the terms and conditions of the contract. These records shall be safeguarded in such a manner as to protect confidentiality and avoid inappropriate disclosure according to federal and state law.

M. The CCN-DBP shall provide both member and provider services in accordance with the terms of the contract and department-issued guides.

1. The CCN-DBP shall submit member handbooks, provider manuals, and a provider directory to the department for approval prior to distribution, annually and subsequent to any revisions.

a. The CCN-DBP must provide a minimum of 30 days notice to the department of any proposed material changes to the member handbooks and/or provider manuals.

b. After approval has been received from the department, the CCN-DBP must provide a minimum of 15 days notice to the members and/or providers of any proposed material changes to the member handbooks and/or provider manuals.

N. The member handbook shall include, but not be limited to:

1. a table of contents;

2. a general description regarding:

a. how a coordinated care network operates;

b. member rights and responsibilities;

c. appropriate utilization of services; and

d. the provider selection process;

3. member rights and protections as specified in 42 CFR §438.100 and the CCN-DBP's contract with the department including, but not limited to:

a. a member's right to change providers within the CCN-DBP;

b. any restrictions on the member's freedom of choice among CCN-DBP providers; and

c. a member's right to refuse to undergo any medical service, diagnoses, or treatment or to accept any health service provided by the CCN-DBP if the member objects (or in the case of a child, if the parent or guardian objects) on religious grounds;

4. member responsibilities, appropriate and inappropriate behavior, and any other information deemed essential by the CCN-DBP or the department including, but not limited to:

a. reporting to the department's Medicaid Customer Service Unit if the member has or obtains another health insurance policy, including employer sponsored insurance; and

5. the amount, duration, and scope of benefits available under the CCN-DBP's contract with the department in sufficient detail to ensure that members understand the benefits to which they are entitled including, but not limited to:

a. information about oral health education and promotion programs;

b. the procedures for obtaining benefits, including prior authorization requirements and benefit limits;

c. how members may obtain benefits, including emergency services, from out-of-network providers;

d. how and where to access any benefits that are available under the Louisiana Medicaid State Plan, but are not covered under the CCN-DBP's contract with the department;

e. the policy on referrals for specialty care;

f. how to make, change, and cancel dental appointments and the importance of canceling and/or rescheduling rather than being a "no show;" and

g. the extent to which and how after-hour services are provided;

6. information to call the Medicaid Customer Service Unit toll free telephone number or visit a local Medicaid eligibility office to report changes in parish of residence, mailing address, or family size changes;

7. a description of the CCN-DBP's member services and the toll-free telephone number, fax number, e-mail address, and mailing address to contact CCN-DBP's Member Services Unit;

8. instructions on how to request multi-lingual interpretation and translation services when needed at no cost to the member. This information shall be included in all versions of the handbook in English, Spanish, and Vietnamese; and

9. grievance, appeal and state fair hearing procedures and time frames as described in 42 CFR §438.400-§438.424 and the CCN-DBP's contract with the department.

O. The provider manual shall include but not be limited to:

1. billing guidelines;

2. medical management/utilization review guidelines;

3. case management guidelines;

4. claims processing guidelines and edits;

5. grievance and appeals procedures and processes; and

6. other policies, procedures, guidelines, or manuals containing pertinent information related to operations and pre-processing claims.

P. The provider directory for members shall be developed in three formats:

1. a hard copy directory for members and, only upon request, potential members; and

2. a web-based online directory for members and the public.

AUTHORITY NOTE: Promulgated in accordance with R.S. 36:254 and Title XIX of the Social Security Act.

HISTORICAL NOTE: Promulgated by the Department of Health and Hospitals, Bureau of Health Services Financing, LR 39:

§2907. Network Access Standards and Guidelines

A. The CCN-DBP must maintain and monitor a provider network that is supported by written agreements and is sufficient to provide adequate access of healthcare to enrollees as required by federal law and the terms as set forth in the contract. The CCN-DBP shall adhere to the federal regulations governing access standards as well as the specific requirements of the contract and all department-issued guides.

B. The CCN-DBP must provide for service delivery out-of-network for any core benefit or service not available in network for which the CCN-DBP does not have an executed contract for the provision of such medically necessary

services. Further, the CCN-DBP must arrange for payment so that the Medicaid enrollee is not billed for this service.

C. The CCN-DBP shall cover all medically necessary services to treat an emergency dental condition in the same amount, duration, and scope as stipulated in the Medicaid State Plan.

1. Emergency medical condition means a medical condition manifesting itself by acute symptoms of sufficient severity (including severe pain) that a prudent layperson, who possesses an average knowledge of health and medicine, could reasonably expect the absence of immediate medical attention to result in the following:

a. placing the health of the individual (or, with respect to a pregnant woman, the health of the woman or her unborn child) in serious jeopardy;

b. serious impairment to bodily functions; or

c. serious dysfunction of any bodily organ or part.

2. Emergency services means covered outpatient services that are as follows:

a. furnished by a provider that is qualified to furnish these services under this Section; and

b. needed to evaluate or stabilize an emergency medical condition.

D. The CCN-DBPP must maintain a provider network and in-area referral providers in sufficient numbers, as determined by the department, to ensure that all of the required core benefits and services are available and accessible in a timely manner within the CCN-DBP's designated geographic service area(s) as approved by the department, in accordance with the terms and conditions in the contract.

AUTHORITY NOTE: Promulgated in accordance with R.S. 36:254 and Title XIX of the Social Security Act.

HISTORICAL NOTE: Promulgated by the Department of Health and Hospitals, Bureau of Health Services Financing, LR 39:

§2909. Benefits and Services

A. Core benefits and services shall be furnished in an amount, duration, and scope that is no less than the amount, duration, and scope for the same services furnished to enrollees under the Louisiana Medicaid State Plan.

1. *Core Benefits and Services*—those oral health care services and benefits required to be provided to Medicaid-eligible recipients as specified under the terms of the contract.

2. *Covered Services*—those health care services and benefits to which a Medicaid-eligible individual is entitled to under the Louisiana Medicaid State Plan.

B. The CCN-DBP:

1. shall ensure that medically necessary services, defined in LAC 50:I.1101, are sufficient in amount, duration, or scope to reasonably be expected to achieve the purpose for which the services are being furnished;

2. may not arbitrarily deny or reduce the amount, duration, or scope of a required service because of diagnosis, type of illness, or condition of the member;

3. may place appropriate limits on a service:

a. on the basis of certain criteria, such as medical necessity; or

b. for the purpose of utilization control, provided the services furnished can reasonably be expected to achieve their purpose;

4. shall provide core benefits and services as outlined and defined in the contract and shall provide medically necessary and appropriate care to Medicaid-eligible members;

5. shall provide all of the core benefits and services consistent with, and in accordance with, the standards as defined in the Title XIX Louisiana Medicaid State Plan:

a. the CCN-DBP may exceed the limits as specified in the minimum service requirements outlined in the contract;

b. no medical service limitation can be more restrictive than those that currently exist under the Title XIX Louisiana Medicaid State Plan; and

C. If the CCN-DBP elects not to provide, reimburse for, or provide coverage of a counseling or referral service because of an objection on moral or religious grounds, the CCN-DBP must furnish information about the services it does not cover in accordance with §1932(b)(3)(B)(ii) of the Social Security Act and federal regulations by notifying:

1. the department in its response to the department's request for proposals (RFP) or whenever it adopts the policy during the term of the contract;

2. the potential enrollees before and during enrollment in the CCN-DBP;

3. enrollees within 90 days after adopting the policy with respect to any particular service; and

4. members through the inclusion of the information in the member handbook.

D. The following is a summary listing of the core benefits and services that a CCN-DBP is required to provide:

1. diagnostic services which include oral examinations, radiographs and oral/facial images, diagnostic casts and accession of tissue – gross and microscopic examinations;

2. preventive services which include prophylaxis, topical fluoride treatments, sealants, fixed space maintainers and re-cementation of space maintainers;

3. restorative services which include amalgam restorations, composite restorations, stainless steel and polycarbonate crowns, stainless steel crowns with resin window; pins, core build-ups, pre-fabricated posts and cores, resin-based composite restorations, appliance removal, and unspecified restorative procedures;

4. endodontic services which include pulp capping, pulpotomy, endodontic therapy on primary and permanent teeth (including treatment plan, clinical procedures and follow-up care), apexification/recalcification, apicoectomy/periradicular services and unspecified endodontic proceduresorgan transplant-related services;

5. periodontal services which include gingivectomy, periodontal scaling and root planning, full mouth debridement, and unspecified periodontal procedures;

6. removable prosthodontics services which include complete dentures, partial dentures, denture repairs, denture relines and unspecified prosthodontics procedures;

7. maxillofacial prosthetic services which include fluoride gel carrier;

8. fixed prosthodontic services which include fixed partial denture pontic, fixed partial denture retainer and other unspecified fixed partial denture services;

9. oral and maxillofacial surgery services which include non-surgical extractions, surgical extractions, coronal remnants extractions, other surgical procedures, alveoloplasty, surgical incision, temporomandibular joint

(TMJ) procedure and other unspecified repair procedures, durable medical equipment and certain supplies;

10. orthodontic services which include interceptive and comprehensive orthodontic treatments, minor treatment to control harmful habits and other orthodontic services;

11. adjunctive general services which include palliative (emergency) treatment, anesthesia, professional visits, miscellaneous services, and unspecified adjunctive procedures; and

12. other services ordinarily reimbursed by DHH under FFS, if the health plan is unable to meet the geographic access requirements specified in the contract, such as transportation costs.

NOTE: The list of services in §2909.D.1-11 is not all inclusive. The contract, policy transmittals, state plan amendments, regulations, provider bulletins, provider manuals, published fee schedules, and guides issued by the department are the final authority regarding services.

E. The core benefits and services provided to the members shall include, but are not limited to, those services specified in the contract.

1. Policy transmittals, state plan amendments, regulations, provider bulletins, provider manuals, and fee schedules, issued by the department are the final authority regarding services.

G. Excluded Services

1. The CCN-DBP is not obligated to provide for the services that are not specified in the contract. Covered services not listed in the contract will continue to be reimbursed by the Medicaid Program on a fee-for-service basis. The CCN-DBP shall provide any appropriate medical documentation and/or referral that is medically necessary. The department shall have the right to incorporate these services at a later date if the per member, per month (PMPM) rates have been adjusted to incorporate the cost of such service.

H. Utilization Management

1. The CCN-DBP shall develop and maintain policies and procedures with defined structures and processes for a utilization management (UM) program that incorporates utilization review. The program shall include service authorization and medical necessity review and comply with the requirements set forth in this Section and the contract.

a. The CCN-DBP shall submit UM policies and procedures to the department for written approval, annually and subsequent to any revisions.

2. The UM Program policies and procedures shall, at a minimum, include the following requirements:

a. the individual(s) who is responsible for determining medical necessity, appropriateness of care, level of care needed, and denying a service authorization request or authorizing a service in amount, duration or scope that is less than requested, must meet the following requirements. The individual shall:

i. be a licensed clinical professional with appropriate clinical expertise in the treatment of a member's condition or disease;

ii. have no history of disciplinary action or sanctions, including loss of staff privileges or participation restrictions that have been taken or are pending such action by any hospital, governmental agency or unit, or regulatory body, that raise a substantial question as to the clinical peer reviewer's physical, mental, or professional competence or moral character; and

iii. attest that no adverse determination will be made regarding any medical procedure or service outside of the scope of such individual's expertise;

b. the methodology utilized to evaluate the clinical necessity, appropriateness, efficacy, or efficiency of health care services;

c. the data sources and clinical review criteria used in decision making;

d. the appropriateness of clinical review shall be fully documented;

e. the process for conducting informal reconsiderations for adverse determinations;

f. mechanisms to ensure consistent application of review criteria and compatible decisions;

g. data collection processes and analytical methods used in assessing utilization of healthcare services; and

h. provisions for assuring confidentiality of clinical and proprietary information.

3. The UM program's medical management and medical necessity review criteria and practice guidelines shall be reviewed annually and updated periodically as appropriate. The CCN-DBP shall use the medical necessity definition as set forth in LAC 50:I.1101 for medical necessity determinations.

a. Medical management and medical necessity review criteria and practice guidelines shall:

i. be objective and based on valid and reliable clinical evidence or a consensus of health care professionals in the particular field;

ii. consider the needs of the members;

iii. be adopted in consultation with contracting health care professionals; and

iv. be disseminated to all affected providers, members, and potential members upon request.

b. The CCN-DBP must identify the source of the medical management criteria used for the review of medical necessity and for service authorization requests.

i. The vendor must be identified if the criteria are purchased.

ii. The association or society must be identified if the criteria are developed/recommended or endorsed by a national or state health care provider association or society.

iii. The guideline source must be identified if the criteria are based on national best practice guidelines.

iv. The individuals who will make medical necessity determinations must be identified if the criteria are based on the medical training, qualifications, and experience of the CCN-DBP dental director or other qualified and trained professionals.

4. The CCN-DBP shall ensure that only licensed clinical professionals with appropriate clinical expertise in the treatment of a member's condition or disease shall determine service authorization request denials or authorize a service in an amount, duration or scope that is less than requested.

5. The CCN-DBP shall ensure that compensation to individuals or entities that conduct UM activities is not structured to provide incentives for the individual or entity to deny, limit, or discontinue medically necessary covered

services to any member in accordance with 42 CFR §438.6(h), 42 CFR §422.208, and 42 CFR §422.210.

AUTHORITY NOTE: Promulgated in accordance with R.S. 36:254 and Title XIX of the Social Security Act.

HISTORICAL NOTE: Promulgated by the Department of Health and Hospitals, Bureau of Health Services Financing, LR 39:

§2911. Payment Methodology

A. Payments to the Dental Benefit Plan. The department, or its fiscal intermediary, shall make monthly capitation payments to the dental benefit plan (DBP) based on a per member, per month (PMPM) rate.

B. The capitation rate will be developed in accordance with 42 CFR 438.6 and will include claims for retroactive coverage. This will include all Title XIX members prior to their enrollment in the health plan and respective covered services in the contract. The health plan is responsible for payment of all claims for medically necessary core benefits and services covered under the contract.

C. As Medicaid is the payor of last resort, the DBP must agree to accept the PMPM rate as payment-in-full from the department and agree not to seek additional payment from a member for any unpaid cost including costs incurred during the retroactive period of eligibility.

D. A DBP shall assume 100 percent liability for any expenditure above the prepaid premium.

E. A DBP shall meet all financial reporting requirements specified in the terms of the contract.

F. A DBP shall have a medical loss ratio (MLR) for each MLR reporting calendar year of not less than 85 percent using definitions for health care services, quality initiatives and administrative cost as specified in 45 CFR Part 158.

1. A DBP shall provide an annual MLR report, in a format as determined by the department, by June 1 following the MLR reporting year that separately reports the DBP's medical loss ratio for services provided to Medicaid enrollees and payment received under the contract with the department from any other products the DBP may offer in the state of Louisiana.

2. If the medical loss ratio is less than 85 percent, the DBP will be subject to refund of the difference, within the timeframe specified, to the department by August 1. The portion of any refund due the department that has not been paid by August 1 will be subject to interest in the amount of ten percent per annum.

3. The department shall provide for an audit of the DBP's annual MLR report and make public the results within 60 calendar days of finalization of the audit.

G. Any cost sharing imposed on Medicaid members must be in accordance with the federal regulations governing cost sharing and cannot exceed the amounts reflected in the Louisiana Medicaid State Plan, but the amounts can be less than the cost sharing levels in the State Plan.

H. The department may adjust the PMPM rate, during the term of the contract, based on:

1. the inclusion of covered Medicaid services not incorporated in the applicable PMPM;

2. the implementation of federal requirements; and/or

3. legislative appropriations and budgetary constraints.

I. The DBP shall not assign its rights to receive the PMPM payment, or it obligation to pay, to any other entity.

. At its option, the department may, at the request of the DBP, make payment to a third party administrator.

J. In the event that an incorrect payment is made to the DBP, all parties agree that reconciliation will occur.

1. If an error or overcharge is discovered by the department, it will be handled in accordance with the terms and conditions of the contract.

K. Network Provider Reimbursement

1. Reimbursement for covered services shall be equal to or greater than the published Medicaid fee-for-service rate in effect on the date of service. Notwithstanding, upon request by a network provider, or potential network provider, and with the prior approval of the department, exceptions may be granted.

2. The DBP's subcontract with the network provider shall specify that the provider shall accept payment made by the DBP as payment-in-full for core benefits and services provided and shall not solicit or accept any surety or guarantee of payment from the department or the member.

a. The term "member" shall include the patient, parent(s), guardian, spouse or any other legally responsible person of the member being served.

3. The DBP may enter into alternative payment arrangements with its network providers or potential providers with prior approval by the department.

a. The DBP shall not enter into alternative payment arrangements with federally qualified health centers or rural health clinics as the DBP is required to reimburse these providers according to the published FQHC/RHC Medicaid prospective payment schedule rate in effect on the date of service, whichever is applicable.

L. Out-of-Network Provider Reimbursement. The DBP shall reimburse the provider the published Medicaid fee-for-service rate in effect on the date of service.

M. Reimbursement for Emergency Services for In-Network or Out-of-Network Providers

1. The DBP is financially responsible for emergency services in accordance with provisions set forth in 42 CFR §422.113.

2. The reimbursement rate for medically necessary emergency services shall be no less than the published Medicaid fee-for-service rate in effect on the date of service, regardless of whether the provider that furnished the services has a contract with the DBP.

a. The DBP may not concurrently or retrospectively reduce a provider's reimbursement rate for these emergency services provided during an episode of care.

AUTHORITY NOTE: Promulgated in accordance with R.S. 36:254 and Title XIX of the Social Security Act.

HISTORICAL NOTE: Promulgated by the Department of Health and Hospitals, Bureau of Health Services Financing, LR 39:

§2913. Prompt Payment of Claims

A. Network Providers. All subcontracts executed by the CCN-DBP shall comply with the terms in the contract. Requirements shall include at a minimum:

1. the name and address of the official payee to whom payment shall be made;

2. the full disclosure of the method and amount of compensation or other consideration to be received from the CCN-DBP; and

3. the standards for the receipt and processing of claims as specified by the department in the CCN-DBP's contract with the department and department issued-guides.

B. Network and Out-of-Network Providers

1. The CCN-DBP shall make payments to its network providers, and out-of-network providers, subject to conditions outlined in the contract and department issued-guides.

a. The CCN-DBP shall pay 90 percent of all clean claims, as defined by the department, received from each provider type within 15 business days of the date of receipt.

b. The CCN-DBP shall pay 99 percent of all clean claims within 30 calendar days of the date of receipt.

2. The provider must submit all claims for payment no later than 12 months from the date of service.

3. The CCN-DBP and all providers shall retain any and all supporting financial information and documents that are adequate to ensure that payment is made in accordance with applicable federal and state laws.

a. Any such documents shall be retained for a period of at least six years or until the final resolution of all litigation, claims, financial management reviews, or audits pertaining to the contract.

4. There shall not be any restrictions on the right of the state and federal government to conduct inspections and/or audits as deemed necessary to assure quality, appropriateness or timeliness of services and reasonableness of costs.

C. Claims Management

1. The CCN-DBP shall process a provider's claims for covered services provided to members in compliance with all applicable state and federal laws, rules, and regulations as well as all applicable CCN policies and procedures including, but not limited to:

a. claims format requirements;

b. claims processing methodology requirements;

c. explanation of benefits and related function requirements;

d. processing of payment errors;

e. notification to providers requirements; and

f. timely filing.

2. The health plan is responsible for claims for all core benefits and services to which a member is entitled immediately upon his or her effective date of enrollment. In addition the health plan is responsible for claims incurred prior to enrollment, including services rendered prior to enrollment and during any retroactive period of eligibility.

D. Provider Claims Dispute

1. The CCN-DBP shall:

a. have an internal claims dispute procedure that is in compliance with the contract and must be approved by the department;

b. contract with independent reviewers to review disputed claims;

c. systematically capture the status and resolution of all claim disputes as well as all associate documentation; and

d. report the status of all disputes and their resolution to the department on a monthly basis as specified in the contract.

E. Claims Payment Accuracy Report

1. The CCN-DBP shall submit an audited claims payment accuracy percentage report to the department on a monthly basis as specified in the contract.

AUTHORITY NOTE: Promulgated in accordance with R.S. 36:254 and Title XIX of the Social Security Act.

HISTORICAL NOTE: Promulgated by the Department of Health and Hospitals, Bureau of Health Services Financing, LR 39:

§2915. Grievance and Appeals Processes

A. The CCN-DBP shall adhere to the provisions governing the grievance and appeals processes for coordinated care network prepaid models outlined in LAC 50:I.Chapter 37, Subparts B and C.

AUTHORITY NOTE: Promulgated in accordance with R.S. 36:254 and Title XIX of the Social Security Act.

HISTORICAL NOTE: Promulgated by the Department of Health and Hospitals, Bureau of Health Services Financing, LR 39:

§2917. Sanctions

A. The CCN-DBP shall adhere to the provisions governing sanctions for coordinated care networks outlined in LAC 50:I.Chapter 39.

AUTHORITY NOTE: Promulgated in accordance with R.S. 36:254 and Title XIX of the Social Security Act.

HISTORICAL NOTE: Promulgated by the Department of Health and Hospitals, Bureau of Health Services Financing, LR 39:

§2919. Audit Requirements

A. The CCN-DBP shall adhere to the provisions governing audit requirements for coordinated care networks outlined in LAC 50:I.Chapter 40.

AUTHORITY NOTE: Promulgated in accordance with R.S. 36:254 and Title XIX of the Social Security Act.

HISTORICAL NOTE: Promulgated by the Department of Health and Hospitals, Bureau of Health Services Financing, LR 39:

Implementation of the provisions of this Rule may be contingent upon the approval of the U.S. Department of Health and Human Services, Centers for Medicare and Medicaid Services (CMS), if it is determined that submission to CMS for review and approval is required.

Interested persons may submit written comments to J. Ruth Kennedy, Bureau of Health Services Financing, P.O. Box 91030, Baton Rouge, LA 70821-9030. She is responsible for responding to inquiries regarding this Emergency Rule. A copy of this Emergency Rule is available for review by interested parties at parish Medicaid offices.

Bruce D. Greenstein
Secretary

1302#051

DECLARATION OF EMERGENCY

Department of Health and Hospitals
Bureau of Health Services Financing

Disproportionate Share Hospital Payments
Public-Private Partnerships (LAC 50:V.Chapter 29)

The Department of Health and Hospitals, Bureau of Health Services Financing adopts LAC 50:Chapter 29 in the Medical Assistance Program as authorized by R.S. 36:254 and pursuant to Title XIX of the Social Security Act. This Emergency Rule is promulgated in accordance with the provisions of the Administrative Procedure Act, R.S. 49:953(B)(1) et seq., and shall be in effect for the maximum

period allowed under the Act or until adoption of the final Rule, whichever occurs first.

The Department of Health and Hospitals, Bureau of Health Services Financing promulgated an Emergency Rule which adopted provisions governing disproportionate share hospital (DSH) payments for non-state owned hospitals in order to encourage them to take over the operation and management of state-owned and operated hospitals that have terminated or reduced services (*Louisiana Register*, Volume 38, Number 11). Participating non-state owned hospitals shall enter into a cooperative endeavor agreement with the department to support this public-private partnership initiative. This Emergency Rule is being promulgated to continue the provisions of the November 1, 2012 Emergency Rule. This action is being taken to promote the health and welfare of Medicaid recipients by maintaining recipient access to much needed hospital services.

Effective March 1, 2013, the Department of Health and Hospitals, Bureau of Health Services Financing adopts provisions to establish DSH payments to non-state owned hospitals participating in public-private partnerships.

Title 50

PUBLIC HEALTH—MEDICAL ASSISTANCE

Part V. Hospital Services

Subpart 3. Disproportionate Share Hospital Payments

Chapter 29. Public-Private Partnerships

§2901. General Provisions

A. Qualifying Criteria. Effective for dates of service on or after November 1, 2012 a hospital may qualify for this category by being:

1. a non-state privately owned and operated hospital that enters into a cooperative endeavor agreement with the Department of Health and Hospitals to increase its provision of inpatient Medicaid and uninsured hospital services by:

a. assuming the management and operation of services at a facility where such services were previously provided by a state owned and operated facility; or

b. providing services that were previously delivered and terminated or reduced by a state owned and operated facility; or

2. a non-state publicly owned and operated hospital that enters into a cooperative endeavor agreement with the Department of Health and Hospitals to increase its provision of inpatient Medicaid and uninsured hospital services by:

a. assuming the management and operation of services at a facility where such services were previously provided by a state owned and operated facility; or

b. providing services that were previously delivered and terminated or reduced by a state owned and operated facility.

AUTHORITY NOTE: Promulgated in accordance with R.S. 36:254 and Title XIX of the Social Security Act.

HISTORICAL NOTE: Promulgated by the Department of Health and Hospitals, Bureau of Health Services Financing, LR 39:

Implementation of the provisions of this Rule may be contingent upon the approval of the U.S. Department of Health and Human Services, Centers for Medicare and Medicaid Services (CMS), if it is determined that submission to CMS for review and approval is required.

Interested persons may submit written comments to J. Ruth Kennedy, Bureau of Health Services Financing, P.O. Box 91030, Baton Rouge, LA 70821-9030. She is responsible for responding to inquiries regarding this Emergency Rule. A copy of this Emergency Rule is available for review by interested parties at parish Medicaid offices.

Bruce D. Greenstein
Secretary

1302#057

DECLARATION OF EMERGENCY

Department of Health and Hospitals
Bureau of Health Services Financing

Early and Periodic Screening, Diagnosis and Treatment
School-Based Nursing Services (LAC 50:XV.Chapter 95)

The Department of Health and Hospitals, Bureau of Health Services Financing amends LAC 50:XV.Chapter 95 in the Medical Assistance Program as authorized by R.S. 36:254 and pursuant to Title XIX of the Social Security Act. This Emergency Rule is promulgated in accordance with the provisions of the Administrative Procedure Act, R.S. 49:953(B)(1) et seq., and shall be in effect for the maximum period allowed under the Act or until adoption of the final Rule, whichever occurs first.

The Department of Health and Hospitals, Bureau of Health Services Financing provides Medicaid coverage for health care services rendered to children and youth under the age of 21 through the Early and Periodic Screening, Diagnosis and Treatment (EPSDT) Program. The department promulgated an Emergency Rule which amended the provisions governing the EPSDT Program in order to adopt provisions to establish reimbursement and coverage for school-based nursing services rendered to all children enrolled in Louisiana schools (*Louisiana Register*, Volume 37, Number 12). The department promulgated an Emergency Rule which amended the January 1, 2012 Emergency Rule to clarify the provisions governing EPSDT school-based nursing services (*Louisiana Register*, Volume 38, Number 3). This Emergency Rule is being promulgated to continue the provisions of the March 20, 2012 Emergency Rule. This action is being taken to promote the health and welfare of Medicaid eligible recipients and to assure a more efficient and effective delivery of health care services.

Effective March 17, 2013, the Department of Health and Hospitals, Bureau of Health Services Financing adopts provisions to provide Medicaid coverage of school-based nursing services covered under the Early and Periodic Screening, Diagnosis, and Treatment Program.

Title 50

PUBLIC HEALTH—MEDICAL ASSISTANCE

Part XV. Services for Special Populations

Subpart 5. Early and Periodic Screening, Diagnosis, and Treatment

Chapter 95. School-Based Nursing Services

§9501. General Provisions

A. EPSDT school-based nursing services are provided by a registered nurse (RN) within a local education agency (LEA). The goal of these services is to prevent or mitigate disease, enhance care coordination, and reduce costs by preventing the need for tertiary care. Providing these services in the school increases access to health care for

children and youth resulting in a more efficient and effective delivery of care.

B. RNs providing school-based nursing services are required to maintain an active RN license with the state of Louisiana and comply with the Louisiana Nurse Practice Act.

C. School-based nursing services shall be covered for all recipients in the school system and not limited to those with an Individualized Education Program (IEP).

D. School boards and staff shall collaborate for all services with the Medicaid recipient's BAYOU HEALTH plan and shall ensure compliance with established protocols. In a fee-for-service situation, for the non-BAYOU HEALTH individuals, staff will make necessary referrals.

AUTHORITY NOTE: Promulgated in accordance with R.S. 36:254 and Title XIX of the Social Security Act.

HISTORICAL NOTE: Promulgated by the Department of Health and Hospitals, Bureau of Health Services Financing, LR 39:

§9503. Covered Services

A. The following school-based nursing services shall be covered.

1. Episodic Care. This is unplanned care that occurs when children see the nurse for assessment of a health concern. Episodic care includes but is not limited to:

a. nose bleeds;

b. cuts;

c. bruises; or

d. flu symptoms.

2. Chronic Medical Condition Management and Care Coordination. This is care based on one of the following criteria.

a. The child has a chronic medical condition or disability requiring implementation of a health plan/protocol (examples would be children with asthma, diabetes, or cerebral palsy). There must be a written health care plan based on a health assessment performed by the RN. The date of the completion of the plan and the name of the person completing the plan must be included in the written plan. Each health care service required and the schedule for its provision must be described in the plan.

b. Medication Administration. This service is scheduled as part of a health care plan developed by either the treating physician or the school district LEA. Administration of medication will be at the direction of the physician and within the license of the RN and must be approved within the district LEA policies.

c. Implementation of Physician's Orders. These services shall be provided as a result of receipt of a written plan of care from the child's physician/BAYOU HEALTH provider or an IEP/Health care plan for students with disabilities.

3. Immunization Assessments. These services are nursing assessments of health status (immunizations) required by the Office of Public Health. This service requires an RN to assess the vaccination status of children in these cohorts once each year. This assessment is limited to the following children:

a. children enrolling in a school for the first time;

b. pre-kindergarten children;

c. kindergarten children; and

d. children entering sixth grade; or

e. any student 11 years of age regardless of grade.

4. EPSDT Program Periodicity Schedule for Screenings. A nurse employed by a school district may perform any of these screens within their licensure for BAYOU HEALTH members as authorized by the BAYOU HEALTH plan or as compliant with fee-for-service for non-BAYOU HEATH individuals. The results of these screens must be made available to the BAYOU HEALTH provider as part of the care coordination plan of the district. The screens shall be performed according to the periodicity schedule including any inter-periodic screens.

a. Repealed.

AUTHORITY NOTE: Promulgated in accordance with R.S. 36:254 and Title XIX of the Social Security Act.

HISTORICAL NOTE: Promulgated by the Department of Health and Hospitals, Bureau of Health Services Financing, LR 39:

§9505. Reimbursement Methodology

A. Payment for EPSDT school-based nursing services shall be based on the most recent school year's actual cost as determined by desk review and/or audit for each LEA provider.

1. Each LEA shall determine cost annually by using DHH's Cost Report for Nursing Service Cost form based on the Direct Services Cost Report.

2. Direct cost shall be limited to the amount of total compensation (salaries, vendor payments and fringe benefits) of current nursing service providers as allocated to nursing services for Medicaid special education recipients. The direct cost related to the electronic health record shall be added to the compensation costs to arrive at the total direct costs for nursing services. There are no additional direct costs included in the rate.

3. Indirect cost shall be derived by multiplying the cognizant agency indirect cost unrestricted rate assigned by the Department of Education to each LEA. There are no additional indirect costs included.

4. To determine the amount of nursing services cost that may be attributed to Medicaid; the ratio of total Medicaid students in the LEA to all students in the LEA is multiplied by total direct cost. Cost data is subject to certification by each LEA. This serves as the basis for obtaining Federal Medicaid funding.

B. For the nursing services, the participating LEAs' actual cost of providing the services shall be claimed for Medicaid Federal Financial Participation (FFP) based on the following methodology.

1. The state shall gather actual expenditure information for each LEA through its Payroll/Benefits and Accounts Payable System.

2. Develop Direct Cost - The Payroll Cost Base. Total annual salaries and benefits paid, as well as contracted (vendor) payments, shall be obtained initially from each LEA's Payroll/Benefits and Accounts Payable system. This data shall be reported on DHH's Nursing Services Cost Report form for all nursing service personnel (i.e. all personnel providing LEA nursing treatment services covered under the state plan).

3. Adjust the Payroll Cost Base. The payroll cost base shall be reduced for amounts reimbursed by other funding sources (e.g. Federal grants). The payroll cost base shall not include any amounts for staff whose compensation is 100 percent reimbursed by a funding source other than state/local funds. This application results in total adjusted salary cost.

4. Determine the Percentage of Time to Provide All Nursing Services. A time study which incorporates the CMS-approved Medicaid Administrative Claiming (MAC) methodology for nursing service personnel shall be used to determine the percentage of time nursing service personnel spend on nursing services and General and Administrative (G and A) time. This time study will assure that there is no duplicate claiming. The G and A percentage shall be reallocated in a manner consistent with the CMS approved Medicaid Administrative Claiming methodology. Total G&A time shall be allocated to all other activity codes based on the percentage of time spent on each respective activity. To reallocate G&A time to nursing services, the percentage of time spent on nursing services shall be divided by 100 percent minus the percentage of G&A time. This shall result in a percentage that represents the nursing services with appropriate allocation of G&A. This percentage shall be multiplied by total adjusted salary cost as determined B.4 above to allocate cost to school based services. The product represents total direct cost.

a. A sufficient number of nursing service personnel shall be sampled to ensure results that will have a confidence level of at least 95 percent with a precision of plus or minus five percent overall.

5. Determine Indirect Cost. Indirect cost shall be determined by multiplying each LEA's indirect unrestricted rate assigned by the cognizant agency (the Department of Education) by total adjusted direct cost as determined under B.3 above. No additional indirect cost shall be recognized outside of the cognizant agency indirect rate. The sum of direct cost and indirect cost shall be the total direct service cost for all students receiving nursing services.

6. Allocate Direct Service Cost to Medicaid. To determine the amount of cost that may be attributed to Medicaid, total cost as determined under B.5 above shall be multiplied by the ratio of Medicaid students in the LEA to all students in the LEA. This results in total cost that may be certified as Medicaid's portion of school-based nursing services cost.

C. Reconciliation of LEA Certified Costs and Medicaid Management Information System (MMIS) Paid Claims. Each LEA shall complete the Nursing Services Cost Report and submit the cost report(s) no later than five months after the fiscal year period ends (June 30), and reconciliation shall be completed within 12 months from the fiscal year end. All filed nursing services cost reports shall be subject to desk review by the department's audit contractor. The department shall reconcile the total expenditures (both state and federal share) for each LEA's nursing services. The Medicaid certified cost expenditures from the nursing services cost report(s) will be reconciled against the MMIS paid claims data and the department shall issue a notice of final settlement pending audit that denotes the amount due to or from the LEA. This reconciliation is inclusive of all nursing services provided by the LEA.

D. Cost Settlement Process. As part of its financial oversight responsibilities, the department shall develop audit and review procedures to audit and process final settlements for certain LEAs. The audit plan shall include a risk assessment of the LEAs using available paid claims data to determine the appropriate level of oversight.

1. The financial oversight of all LEAs shall include reviewing the costs reported on the Nursing Services Cost Reports against the allowable costs, performing desk reviews and conducting limited reviews.

2. The department will make every effort to audit each LEA at least every four years. These activities shall be performed to ensure that audit and final settlement occurs no later than two years from the LEA's fiscal year end for the cost reporting period audited. LEAs may appeal audit findings in accordance with DHH appeal procedures.

3. The department shall adjust the affected LEA's payments no less than annually, when any reconciliation or final settlement results in significant underpayments or overpayments to any LEA. By performing the reconciliation and final settlement process, there shall be no instances where total Medicaid payments for services exceed 100 percent of actual, certified expenditures for providing LEA services for each LEA.

4. If the interim payments exceed the actual, certified costs of an LEA's Medicaid services, the department shall recoup the overpayment in one of the following methods:

a. offset all future claim payments from the affected LEA until the amount of the overpayment is recovered;

b. recoup an agreed upon percentage from future claims payments to the LEA to ensure recovery of the overpayment within one year; or

c. recoup an agreed upon dollar amount from future claims payments to the LEA to ensure recovery of the overpayment within one year.

5. If the actual certified costs of an LEA's Medicaid services exceed interim Medicaid payments, the department will pay this difference to the LEA in accordance with the final actual certification agreement.

AUTHORITY NOTE: Promulgated in accordance with R.S. 36:254 and Title XIX of the Social Security Act.

HISTORICAL NOTE: Promulgated by the Department of Health and Hospitals, Bureau of Health Services Financing, LR 39:

Implementation of the provisions of this Rule may be contingent upon the approval of the U.S. Department of Health and Human Services, Centers for Medicare and Medicaid Services (CMS), if it is determined that submission to CMS for review and approval is required.

Interested persons may submit written comments to J. Ruth Kennedy, Bureau of Health Services Financing, P.O. Box 91030, Baton Rouge, LA 70821-9030. She is responsible for responding to inquiries regarding this Emergency Rule. A copy of this Emergency Rule is available for review by interested parties at parish Medicaid offices.

Bruce D. Greenstein
Secretary

1302#058

DECLARATION OF EMERGENCY

Department of Health and Hospitals
Bureau of Health Services Financing

End Stage Renal Disease Facilities
Reimbursement Rate Reduction
(LAC 50:XI.6901 and 6903)

The Department of Health and Hospitals, Bureau of Health Services Financing amends LAC 50:XI.6901 and §6903 in the Medical Assistance Program as authorized by R.S. 36:254 and pursuant to Title XIX of the Social Security Act and as directed by House Bill 1 of the 2012 Regular Session of the Louisiana Legislature which states: "The secretary is directed to utilize various cost containment measures to ensure expenditures remain at the level appropriated in this Schedule, including but not limited to precertification, preadmission screening, diversion, fraud control, utilization review and management, prior authorization, service limitations, drug therapy management, disease management, cost sharing, and other measures as permitted under federal law." This Emergency Rule is promulgated in accordance with the provisions of the Administrative Procedure Act, R.S. 49:953(B)(1) et seq., and shall be in effect for the maximum period allowed under the Act or until adoption of the final Rule, whichever occurs first.

As a result of a budgetary shortfall in state fiscal year 2011, the Department of Health and Hospitals, Bureau of Health Services Financing amended the provisions governing the reimbursement methodology for end stage renal disease (ESRD) facilities to reduce the reimbursement rates (*Louisiana Register*, Volume 37, Number 6).

Due to a budgetary shortfall in state fiscal year 2013, the department promulgated an Emergency Rule which amended the provisions governing the reimbursement methodology for ESRD facilities to reduce the reimbursement rates (*Louisiana Register*, Volume 38, Number 7). This Emergency Rule is being promulgated to continue the provisions of the July 1, 2012 Emergency Rule. This action is being taken to avoid a budget deficit in the medical assistance programs.

Effective February 28, 2013 the Department of Health and Hospitals, Bureau of Health Services Financing amends the provisions governing the reimbursement methodology for end stage renal disease facilities to reduce the reimbursement rates.

Title 50
PUBLIC HEALTH—MEDICAL ASSISTANCE
Part XI. Clinic Services
Subpart 9. End Stage Renal Disease Facilities
Chapter 69. Reimbursement
§6901. General Provisions

A. - F. ...

G. Effective for dates of service on or after July 1, 2012, the reimbursement to ESRD facilities shall be reduced by 3.7 percent of the rates in effect on June 30, 2012.

AUTHORITY NOTE: Promulgated in accordance with R.S. 36:254 and Title XIX of the Social Security Act.

HISTORICAL NOTE: Promulgated by the Department of Health and Hospitals, Office of the Secretary, Bureau of Health Services Financing, LR 30:1022 (May 2004), amended by the Department of Health and Hospitals, Bureau of Health Services Financing, LR 35:1891 (September 2009), LR 36:2040 (September 2010), LR 37:1599 (June 2011), LR 39:

§6903. Medicare Part B Claims

A. - F. ...

G. Effective for dates of service on or after July 1, 2012, the reimbursement to ESRD facilities for Medicare Part B claims shall be reduced by 3.7 percent of the rates in effect on June 30, 2012.

AUTHORITY NOTE: Promulgated in accordance with R.S. 36:254 and Title XIX of the Social Security Act.

HISTORICAL NOTE: Promulgated by the Department of Health and Hospitals, Bureau of Health Services Financing, LR 35:1891 (September 2009), amended LR 36:2040 (September 2010), LR 37:1599 (June 2011), LR 39:

Implementation of the provisions of this Rule may be contingent upon the approval of the U.S. Department of Health and Human Services, Centers for Medicare and Medicaid Services (CMS), if it is determined that submission to CMS for review and approval is required.

Interested persons may submit written comments to J. Ruth Kennedy, Bureau of Health Services Financing, P.O. Box 91030, Baton Rouge, LA 70821-9030. She is responsible for responding to inquiries regarding this Emergency Rule. A copy of this Emergency Rule is available for review by interested parties at parish Medicaid offices.

Bruce D. Greenstein
Secretary

1302#059

DECLARATION OF EMERGENCY

Department of Health and Hospitals
Bureau of Health Services Financing

Family Planning Clinics—Reimbursement Rate Reduction
(LAC 50:XI.3501)

The Department of Health and Hospitals, Bureau of Health Services Financing amends LAC 50:XI.3501 in the Medical Assistance Program as authorized by R.S. 36:254 and pursuant to Title XIX of the Social Security Act and as directed by House Bill 1 of the 2012 Regular Session of the Louisiana Legislature which states: "The secretary is directed to utilize various cost containment measures to ensure expenditures remain at the level appropriated in this Schedule, including but not limited to precertification, preadmission screening, diversion, fraud control, utilization review and management, prior authorization, service limitations, drug therapy management, disease management, cost sharing, and other measures as permitted under federal law." This Emergency Rule is promulgated in accordance with the provisions of the Administrative Procedure Act, R.S. 49:953(B)(1) et seq., and shall be in effect for the maximum period allowed under the Act or until adoption of the final Rule, whichever occurs first.

As a result of a budgetary shortfall in state fiscal year 2011, the Department of Health and Hospitals, Bureau of Health Services Financing amended the provisions governing the reimbursement methodology for family planning clinics to reduce the reimbursement rates (*Louisiana Register*, Volume 37, Number 6). As a result of a budgetary shortfall in state fiscal year 2013, the Department

of Health and Hospitals, Bureau of Health Services Financing promulgated an Emergency Rule which amended the provisions governing the reimbursement methodology for family planning clinics to reduce the reimbursement rates (*Louisiana Register*, Volume 38, Number 7). This Emergency Rule is being promulgated to continue the provisions of the July 1, 2012 Emergency Rule. This action is being taken to avoid a budget deficit in the medical assistance programs.

Effective February 28, 2013, the Department of Health and Hospitals, Bureau of Health Services Financing amends the provisions governing the reimbursement methodology for family planning clinics to reduce the reimbursement rates.

Title 50
PUBLIC HEALTH—MEDICAL ASSISTANCE
Part XI. Clinic Services
Subpart 5. Family Planning
Chapter 35. Reimbursement
§3501. Reimbursement Methodology

A. - B. …

C. Effective for dates of service on or after July 1, 2012, the reimbursement rates for family planning clinics shall be equal to the reimbursement rates for family planning services in the Professional Services Program.

AUTHORITY NOTE: Promulgated in accordance with R.S. 36:254 and Title XIX of the Social Security Act.

HISTORICAL NOTE: Promulgated by the Department of Health and Hospitals, Office of the Secretary, Bureau of Health Services Financing, LR 30:1022 (May 2004), amended by the Department of Health and Hospitals, Bureau of Health Services Financing, LR 37:1600 (June 2011), LR 39:

Implementation of the provisions of this Rule may be contingent upon the approval of the U.S. Department of Health and Human Services, Centers for Medicare and Medicaid Services (CMS), if it is determined that submission to CMS for review and approval is required.

Interested persons may submit written comments to J. Ruth Kennedy, Bureau of Health Services Financing, P.O. Box 91030, Baton Rouge, LA 70821-9030. She is responsible for responding to inquiries regarding this Emergency Rule. A copy of this Emergency Rule is available for review by interested parties at parish Medicaid offices.

Bruce D. Greenstein
Secretary

1302#060

DECLARATION OF EMERGENCY

Department of Health and Hospitals
Bureau of Health Services Financing

Family Planning Waiver
Reimbursement Rate Reduction
(LAC 50:XXII.2701)

The Department of Health and Hospitals, Bureau of Health Services Financing amends LAC 50:XXII.2701 in the Medical Assistance Program as authorized by R.S. 36:254 and pursuant to Title XIX of the Social Security Act and as directed by House Bill 1 of the 2012 Regular Session of the Louisiana Legislature which states: "The secretary is directed to utilize various cost containment measures to ensure expenditures remain at the level appropriated in this Schedule, including but not limited to precertification, preadmission screening, diversion, fraud control, utilization review and management, prior authorization, service limitations, drug therapy management, disease management, cost sharing, and other measures as permitted under federal law." This Emergency Rule is promulgated in accordance with the provisions of the Administrative Procedure Act, R.S. 49:953(B)(1) et seq., and shall be in effect for the maximum period allowed under the Act or until adoption of the final Rule, whichever occurs first.

As a result of a budgetary shortfall in state fiscal year 2011, the Department of Health and Hospitals, Bureau of Health Services Financing amended the provisions governing the reimbursement methodology for family planning waiver services to reduce reimbursement rates (*Louisiana Register*, Volume 37, Number 7).

As a result of a budgetary shortfall in state fiscal year 2013, the Department of Health and Hospitals, Bureau of Health Services Financing promulgated an Emergency Rule which amended the provisions governing the reimbursement methodology for family planning waiver services in order to align the reimbursement rates in the waiver with the rates for family planning services provided under the Medicaid State Plan (*Louisiana Register*, Volume 38, Number 7). This Emergency Rule is being promulgated to continue the provisions of the July 1, 2012 Emergency Rule. This action is being taken to avoid a budget deficit in the medical assistance programs.

Effective February 28, 2013, the Department of Health and Hospitals, Bureau of Health Services Financing amends the provisions governing the reimbursement methodology for family planning waiver services.

Title 50
PUBLIC HEALTH—MEDICAL ASSISTANCE
Part XXII. 1115 Demonstration Waivers
Subpart 3. Family Planning Waiver
Chapter 27. Reimbursement
§2701. Reimbursement Methodology

A. - C. …

D. Effective for dates of service on or after July 1, 2012, the reimbursement rates for the following Family Planning Waiver services shall be adjusted to be consistent with the reimbursement rates paid on the established Medicaid fee schedule for family planning services covered under the Medicaid State Plan in the Professional Services Program.

1. Rate adjustments shall be made to the following procedure codes:

a. current procedural terminology (CPT) codes 00851, 36415, 58300, 58301, 58600, 58670, 58671, 71020, 80048, 80050, 80051, 82962, 86631, 86703, 87480, 87481, 87490, 87491, 87590, 87591, 87621, 87810, 87850, 88141, 88175, 88174, 93000, 99212, 99241, and 99242, 71010, 80061, 81000,81001, 81002, 81003, 81005, 81025, 82948, 84520, 84550, 84702, 84703, 85014, 85018, 86592, 86593, 86689, 86701, 87070, 87075, 87081, 87110, and 87210.

AUTHORITY NOTE: Promulgated in accordance with R.S. 36:254 and Title XIX of the Social Security Act.

HISTORICAL NOTE: Promulgated by the Department of Health and Hospitals, Office of the Secretary, Bureau of Health Services Financing, LR 32:1461 (August 2006), amended by the

Department of Health and Hospitals, Bureau of Health Services Financing, LR 36:2280 (October 2010), LR 37:2156 (July 2011), LR 39:

Implementation of the provisions of this Rule may be contingent upon the approval of the U.S. Department of Health and Human Services, Centers for Medicare and Medicaid Services (CMS), if it is determined that submission to CMS for review and approval is required.

Interested persons may submit written comments to J. Ruth Kennedy, Bureau of Health Services Financing, P.O. Box 91030, Baton Rouge, LA 70821-9030. She is responsible for responding to inquiries regarding this Emergency Rule. A copy of this Emergency Rule is available for review by interested parties at parish Medicaid offices.

Bruce D. Greenstein
Secretary

1302#061

DECLARATION OF EMERGENCY

Department of Health and Hospitals
Bureau of Health Services Financing
and
Office of Aging and Adult Services

Home and Community-Based Services Waivers
Adult Day Health Care—Reimbursement Rate Reduction
(LAC 50:XXI.2915)

The Department of Health and Hospitals, Bureau of Health Services Financing and the Office of Aging and Adult Services amend LAC 50:XXI.2915 in the Medical Assistance Program as authorized by R.S. 36:254 and pursuant to Title XIX of the Social Security Act and as directed by House Bill 1 of the 2012 Regular Session of the Louisiana Legislature which states: "The secretary is directed to utilize various cost containment measures to ensure expenditures remain at the level appropriated in this Schedule, including but not limited to precertification, preadmission screening, diversion, fraud control, utilization review and management, prior authorization, service limitations, drug therapy management, disease management, cost sharing, and other measures as permitted under federal law." This Emergency Rule is promulgated in accordance with the provisions of the Administrative Procedure Act, R.S. 49:953(B)(1) et seq., and shall be in effect for the maximum period allowed under the Act or until adoption of the final Rule, whichever occurs first.

As a result of a budgetary shortfall in state fiscal year 2011, the Department of Health and Hospitals, Bureau of Health Services Financing amended the provisions governing the reimbursement methodology for the ADHC Waiver to reduce the reimbursement rates (*Louisiana Register*, Volume 37, Number 9).

Due to a budgetary shortfall in state fiscal year 2013, the department promulgated an Emergency Rule which amended the provisions governing the reimbursement methodology for the Adult Day Health Care Waiver to reduce the reimbursement rates (*Louisiana Register*, Volume 38, Number 7). This Emergency Rule is being promulgated to continue the provisions of the July 1, 2012 Emergency Rule. This action is being taken to avoid a budget deficit in the medical assistance programs.

Effective February 28, 2013, the Department of Health and Hospitals, Bureau of Health Services Financing and the Office of Aging and Adult Services amend the provisions governing the Adult Day Health Care Waiver to reduce the reimbursement rates.

Title 50
PUBLIC HEALTH—MEDICAL ASSISTANCE
Part XXI. Home and Community-Based Services Waivers
Subpart 3. Adult Day Health Care
Chapter 29. Reimbursement
§2915. Provider Reimbursement

A. - F.3. ...

G. Effective for dates of service on or after July 1, 2012, the reimbursement rates for ADHC services shall be reduced by 1.5 percent of the rates in effect on June 30, 2012.

1. The provider-specific transportation component shall be excluded from this rate reduction.

AUTHORITY NOTE: Promulgated in accordance with R.S. 36:254 and Title XIX of the Social Security Act.

HISTORICAL NOTE: Promulgated by the Department of Health and Hospitals, Office of Aging and Adult Services, LR 34:2170 (October 2008), repromulgated LR 34:2575 (December 2008), amended by the Department of Health and Hospitals, Bureau of Health Services Financing and the Office of Aging and Adult Services, LR 37:2157 (July 2011), LR 37:2625 (September 2011), LR 39:

Implementation of the provisions of this Rule may be contingent upon the approval of the U.S. Department of Health and Human Services, Centers for Medicare and Medicaid Services (CMS), if it is determined that submission to CMS for review and approval is required.

Interested persons may submit written comments to J. Ruth Kennedy, Bureau of Health Services Financing, P.O. Box 91030, Baton Rouge, LA 70821-9030. She is responsible for responding to inquiries regarding this Emergency Rule. A copy of this Emergency Rule is available for review by interested parties at parish Medicaid offices.

Bruce D. Greenstein
Secretary

1302#062

DECLARATION OF EMERGENCY

Department of Health and Hospitals
Bureau of Health Services Financing
and
Office of Aging and Adult Services

Home and Community-Based Services Waivers
Community Choices Waiver—Reimbursement Methodology
(LAC 50:XXI.9501)

The Department of Health and Hospitals, Bureau of Health Services Financing and the Office of Aging and Adult Services amend LAC 50:XXI.9501 in the Medical Assistance Program as authorized by R.S. 36:254 and pursuant to Title XIX of the Social Security Act. This Emergency Rule is promulgated in accordance with the

provisions of the Administrative Procedure Act, R.S. 49:953(B)(1) et seq., and shall be in effect for the maximum period allowed under the Act or until adoption of the final Rule, whichever occurs first.

The Department of Health and Hospitals, Bureau of Health Services Financing and the Office of Aging and Adult Services adopted provisions which established the Community Choices Waiver Program to replace the Elderly and Disabled Adults (EDA) Waiver (*Louisiana Register*, Volume 37, Number 12). The department promulgated an Emergency Rule which amended the December 20, 2011 Rule to clarify provisions governing the delivery of services, to remove the wage pass-through language that was erroneously included in the Rule, and to comply with a court-mandated standard for use in the determination of expedited Community Choices Waiver slots and addition of waiver opportunities (*Louisiana Register*, Volume 38, Number 2).

The department promulgated an Emergency Rule which clarified and amended the provisions governing the reimbursement methodology for personal assistance services provided in the Community Choices Waiver in order to correct the percentages listed in the Rule so that the provisions will reflect current payment methodology for personal assistance services (*Louisiana Register*, Volume 38, Number 11). This Emergency Rule is being promulgated to continue the provisions of the November 1, 2012 Emergency Rule. This action is being taken to promote the health and welfare of waiver participants.

Effective March 2, 2013, the Department of Health and Hospitals, Bureau of Health Services Financing amends the provisions governing the reimbursement methodology for the Community Choices Waiver.

Title 50
PUBLIC HEALTH—MEDICAL ASSISTANCE
Part XXI. Home and Community-Based Services Waivers
Subpart 7. Community Choices Waiver
Chapter 95. Reimbursement
§9501. Reimbursement Methodology

A. Reimbursement for the following services shall be a prospective flat rate for each approved unit of service provided to the participant. One quarter hour (15 minutes) is the standard unit of service, which covers both the service provision and administrative costs for the following services:

1. - 1.a. ...

b. for dates of service on or after November 1, 2012, personal assistance services furnished to two participants shall be reimbursed at 82.79 percent of the full rate for each participant;

c. for dates of service on or after November 1, 2012, personal assistance services furnished to three participants shall be reimbursed at 72.4 percent of the full rate for each participant;

2. in-home caregiver temporary support service when provided by a personal care services or home health agency;

3. caregiver temporary support services when provided by an adult day health care center; and

4. adult day health care services.

B. - C.1. ...

D. The following services shall be reimbursed at an established monthly rate:

1. - 2. ...

3. Monthly monitoring/maintenance for certain assistive devices/technology and medical supplies procedures.

E. - G. ...

H. Reimbursement shall not be made for Community Choices Waiver services provided prior to the department's approval of the POC and release of prior authorization for the services.

AUTHORITY NOTE: Promulgated in accordance with R.S. 36:254 and Title XIX of the Social Security Act.

HISTORICAL NOTE: Promulgated by the Department of Health and Hospitals, Bureau of Health Services Financing and the Office of Aging and Adult Services, LR 37:3525 (December 2011), LR 39:

Implementation of the provisions of this Rule may be contingent upon the approval of the U.S. Department of Health and Human Services, Centers for Medicare and Medicaid Services (CMS), if it is determined that submission to CMS for review and approval is required.

Interested persons may submit written comments to J. Ruth Kennedy, Bureau of Health Services Financing, P.O. Box 91030, Baton Rouge, LA 70821-9030. She is responsible for responding to inquiries regarding this Emergency Rule. A copy of this Emergency Rule is available for review by interested parties at parish Medicaid offices.

Bruce D. Greenstein
Secretary

1302#063

DECLARATION OF EMERGENCY

Department of Health and Hospitals
Bureau of Health Services Financing
and
Office for Citizens with Developmental Disabilities

Home and Community-Based Services Waivers
Residential Options Waiver
Reimbursement Rate Reduction
(LAC 50:XXI.16901)

The Department of Health and Hospitals, Bureau of Health Services Financing and the Office for Citizens with Developmental Disabilities amend LAC 50:XXI.16901 under the Medical Assistance Program as authorized by R.S. 36:254 and pursuant to Title XIX of the Social Security Act and as directed by House Bill 1 of the 2012 Regular Session of the Louisiana Legislature which states: "The secretary is directed to utilize various cost containment measures to ensure expenditures remain at the level appropriated in this Schedule, including but not limited to precertification, preadmission screening, diversion, fraud control, utilization review and management, prior authorization, service limitations, drug therapy management, disease management, cost sharing, and other measures as permitted under federal law." This Emergency Rule is promulgated in accordance with the provisions of the Administrative Procedure Act, R.S. 49:953(B)(1) et seq., and shall be in effect for the maximum period allowed under the Act or until adoption of the final Rule, whichever occurs first.

The Department of Health and Hospitals, Bureau of Health Services and the Office for Citizens with Developmental Disabilities promulgated an Emergency Rule which amended the provisions governing the Residential Options Waiver (ROW) to revise the provisions governing the allocation of waiver opportunities and the delivery of services in order to provide greater clarity (*Louisiana Register*, Volume 36, Number 4).

Due to a budgetary shortfall in state fiscal year 2013, the department promulgated an Emergency Rule which amended the provisions governing the reimbursement methodology for the Residential Options Waiver to reduce the reimbursement rates (*Louisiana Register*, Volume 38, Number 7). This Emergency Rule is being promulgated to continue the provisions of the July 1, 2012 Emergency Rule. This action is being taken to avoid a budget deficit in the medical assistance programs.

Effective February 28, 2013, the Department of Health and Hospitals, Bureau of Health Services Financing and the Office for Citizens with Developmental Disabilities amend the provisions governing the reimbursement methodology for the Residential Options Waiver to reduce the reimbursement rates.

Title 50
PUBLIC HEALTH—MEDICAL ASSISTANCE
Part XXI. Home and Community Based Services Waivers
Subpart 13. Residential Options Waiver
Chapter 169. Reimbursement
§16901. Reimbursement Methodology

A. - K.1.d. ...

L. Effective for dates of service on or after July 1, 2012, the reimbursement for Residential Options Waiver services shall be reduced by 1.5 percent of the rates in effect on June 30, 2012.

1. The following services shall be excluded from this rate reduction:

a. personal emergency response services;
b. environmental accessibility adaption services;
c. specialized medical equipment and supplies; and
d. transitional services.

AUTHORITY NOTE: Promulgated in accordance with R.S. 36:254 and Title XIX of the Social Security Act.

HISTORICAL NOTE: Promulgated by the Department of Health and Hospitals, Office for Citizens with Developmental Disabilities, LR 33:2456 (November 2007), amended by the Department of Health and Hospitals, Bureau of Health Services Financing and the Office for Citizens with Developmental Disabilities, LR 39:

Implementation of the provisions of this Rule may be contingent upon the approval of the U.S. Department of Health and Human Services, Centers for Medicare and Medicaid Services (CMS), if it is determined that submission to CMS for review and approval is required.

Interested persons may submit written comments to J. Ruth Kennedy, Bureau of Health Services Financing, P.O. Box 91030, Baton Rouge, LA 70821-9030. She is responsible for responding to inquiries regarding this Emergency Rule. A copy of this Emergency Rule is available for review by interested parties at parish Medicaid offices.

Bruce D. Greenstein
Secretary

1302#065

DECLARATION OF EMERGENCY

Department of Health and Hospitals
Bureau of Health Services Financing
and
Office for Citizens with Developmental Disabilities

Home and Community-Based Services Waivers
Supports Waiver—Reimbursement Rate Reduction
(LAC 50:XXI.6101)

The Department of Health and Hospitals, Bureau of Health Services Financing and the Office for Citizens with Developmental Disabilities amend LAC 50:XXI.6101 in the Medical Assistance Program as authorized by R.S. 36:254 and pursuant to Title XIX of the Social Security Act and as directed by House Bill 1 of the 2012 Regular Session of the Louisiana Legislature which states: "The secretary is directed to utilize various cost containment measures to ensure expenditures remain at the level appropriated in this Schedule, including but not limited to precertification, preadmission screening, diversion, fraud control, utilization review and management, prior authorization, service limitations, drug therapy management, disease management, cost sharing, and other measures as permitted under federal law." This Emergency Rule is promulgated in accordance with the provisions of the Administrative Procedure Act, R.S. 49:953(B)(1) et seq., and shall be in effect for the maximum period allowed under the Act or until adoption of the final Rule, whichever occurs first.

As a result of a budgetary shortfall in state fiscal year 2011, the Department of Health and Hospitals, Bureau of Health Services Financing and the Office for Citizens with Developmental Disabilities amended the provisions governing the reimbursement methodology for Supports Waiver services to reduce the reimbursement rates (*Louisiana Register*, Volume 37, Number 7).

Due to a budgetary shortfall in state fiscal year 2013, the department promulgated an Emergency Rule which amended the provisions governing the reimbursement methodology for Supports Waiver services to reduce the reimbursement rates (*Louisiana Register*, Volume 38, Number 7). This Emergency Rule is being promulgated to continue the provisions of the July 1, 2012 Emergency Rule. This action is being taken to avoid a budget deficit in the medical assistance programs.

Effective February 28, 2013, the Department of Health and Hospitals, Bureau of Health Services Financing and the Office for Citizens with Developmental Disabilities amend the provisions governing the reimbursement methodology for Supports Waiver services to reduce the reimbursement rates.

Title 50
PUBLIC HEALTH—MEDICAL ASSISTANCE
Part XXI. Home and Community Based Services Waivers
Subpart 5. Supports Waiver
Chapter 61. Reimbursement Methodology
§6101. Reimbursement Methodology

A. - L.1. …

M. Effective for dates of service on or after July 1, 2012, the reimbursement rates for Supports Waiver services shall be reduced by 1.5 percent of the rates on file as of June 30, 2012.

1. Personal emergency response system services shall be excluded from the rate reduction.

AUTHORITY NOTE: Promulgated in accordance with R.S. 36:254 and Title XIX of the Social Security Act.

HISTORICAL NOTE: Promulgated by the Department of Health and Hospitals, Office of the Secretary, Office for Citizens with Developmental Disabilities, LR 32:1607 (September 2006), amended LR 34:662 (April 2008), amended by the Department of Health and Hospitals, Bureau of Health Services Financing and the Office for Citizens with Developmental Disabilities, LR 36:2281 (October 2010), amended LR 37:2158 (July 2011), LR 39:

Implementation of the provisions of this Rule may be contingent upon the approval of the U.S. Department of Health and Human Services, Centers for Medicare and Medicaid Services (CMS), if it is determined that submission to CMS for review and approval is required.

Interested persons may submit written comments to J. Ruth Kennedy, Bureau of Health Services Financing, P.O. Box 91030, Baton Rouge, LA 70821-9030. She is responsible for responding to inquiries regarding this Emergency Rule. A copy of this Emergency Rule is available for review by interested parties at parish Medicaid offices.

Bruce D. Greenstein
Secretary

1302#066

DECLARATION OF EMERGENCY

Department of Health and Hospitals
Bureau of Health Services Financing

Home and Community-Based Waiver Services
Cost Reporting Requirements (LAC 50:XXI.701)

The Department of Health and Hospitals, Bureau of Health Services Financing adopts LAC 50:XXI.Chapter 7 in the Medical Assistance Program as authorized by R.S. 36:254 and pursuant to Title XIX of the Social Security Act. This Emergency Rule is promulgated in accordance with the provisions of the Administrative Procedure Act, R.S. 49:953(B)(1) et seq., and shall be in effect for the maximum period allowed under the Act or until adoption of the final Rule, whichever occurs first.

Act 299 of the 2011 Regular Session of the Louisiana Legislature directed the Department of Health and Hospitals to establish mandatory cost reporting requirements for providers of home and community-based services to verify expenditures and for use in determining appropriate reimbursement rates. In compliance with Act 299, the department promulgated an Emergency Rule which adopted provisions establishing cost reporting requirements for providers of home and community-based waiver services (Louisiana Register, Volume 38, Number 7). This Emergency Rule is being promulgated to continue the provisions of the July 1, 2012 Emergency Rule. This action is being taken to promote the health and welfare of waiver participants and to ensure that these services are rendered in an efficient and cost-effective manner.

Effective February 28, 2013, the Department of Health and Hospitals, Bureau of Health Services Financing adopts provisions to establish cost reporting requirements for providers of home and community-based waiver services.

Title 50
PUBLIC HEALTH—MEDICAL ASSISTANCE
Part XXI. Home and Community Based Services Waivers
Subpart 1. General Provisions
Chapter 7. Cost Reporting Requirements
§701. General Provisions

A. Effective July 1, 2012, the department shall implement mandatory cost reporting requirements for providers of home and community-based waiver services. The cost reports will be used to verify expenditures and to support rate setting for the services rendered to waiver recipients.

B. Providers of services in the following waiver programs shall be required to submit cost reports:

1. adult day health care waiver;
2. children's choice waiver;
3. community choices waiver;
4. new opportunities waiver;
5. residential options waiver; and
6. supports waiver.

C. Each provider shall complete the DHH approved cost report and submit the cost report(s) to the department no later than five months after the state fiscal year ends (June 30).

AUTHORITY NOTE: Promulgated in accordance with R.S. 36:254 and Title XIX of the Social Security Act.

HISTORICAL NOTE: Promulgated by the Department of Health and Hospitals, Bureau of Health Services Financing, LR 39:

Implementation of the provisions of this Rule may be contingent upon the approval of the U.S. Department of Health and Human Services, Centers for Medicare and Medicaid Services (CMS), if it is determined that submission to CMS for review and approval is required.

Interested persons may submit written comments to J. Ruth Kennedy, Bureau of Health Services Financing, P.O. Box 91030, Baton Rouge, LA 70821-9030. She is responsible for responding to inquiries regarding this Emergency Rule. A copy of this Emergency Rule is available for review by interested parties at parish Medicaid offices.

Bruce D. Greenstein
Secretary

1302#064

DECLARATION OF EMERGENCY

Department of Health and Hospitals
Bureau of Health Services Financing

Home Health Program—Durable Medical Equipment
Reimbursement Rate Reduction
(LAC 50:XIII.10301)

The Department of Health and Hospitals, Bureau of Health Services Financing amends LAC 50:XIII.10301 in the Medical Assistance Program as authorized by R.S. 36:254 and pursuant to Title XIX of the Social Security Act and as directed by House Bill 1 of the 2012 Regular Session of the Louisiana Legislature which states: "The secretary is directed to utilize various cost containment measures to ensure expenditures remain at the level appropriated in this Schedule, including but not limited to precertification, preadmission screening, diversion, fraud control, utilization review and management, prior authorization, service limitations, drug therapy management, disease management, cost sharing, and other measures as permitted under federal law." This Emergency Rule is promulgated in accordance with the provisions of the Administrative Procedure Act, R. S. 49:953(B)(1) et seq., and shall be in effect for the maximum period allowed under the Act or until adoption of the final Rule, whichever occurs first

As a result of a budgetary shortfall in state fiscal year 2010, the Department of Health and Hospitals, Bureau of Health Services Financing amended the provisions governing the reimbursement methodology for medical equipment, supplies and appliances to reduce the reimbursement rates (*Louisiana Register*, Volume 36, Number 9).

Due to a budgetary shortfall in state fiscal year 2013, the department promulgated an Emergency Rule which amended the provisions governing the reimbursement methodology for medical equipment, supplies and appliances to reduce the reimbursement rates (*Louisiana Register*, Volume 38, Number 7). This Emergency Rule is being promulgated to continue the provisions of the July 1, 2012 Emergency Rule. This action is being taken to avoid a budget deficit in the medical assistance programs.

Effective February 28, 2013, the Department of Health and Hospitals, Bureau of Health Services Financing amends the provisions governing the reimbursement methodology for medical equipment, supplies and appliances to reduce the reimbursement rates.

Title 50
PUBLIC HEALTH—MEDICAL ASSISTANCE
Part XIII. Home Health Program
Subpart 3. Medical Equipment, Supplies and Appliances
Chapter 103. Reimbursement Methodology
§10301. General Provisions

A. - E.2. ...

F. Effective for dates of service on or after July 1, 2012, the reimbursement paid for medical equipment, supplies and appliances shall be reduced by 3.7 percent of the rates on file as of June 30, 2012.

AUTHORITY NOTE: Promulgated in accordance with R.S. 36:254 and Title XIX of the Social Security Act.

HISTORICAL NOTE: Promulgated by the Department of Health and Hospitals, Bureau of Health Services Financing, LR 35:1894 (September 2009), amended LR 36:1247 (June 2010), LR 36:2041 (September 2010), LR 39:

Implementation of the provisions of this Rule may be contingent upon the approval of the U.S. Department of Health and Human Services, Centers for Medicare and Medicaid Services (CMS), if it is determined that submission to CMS for review and approval is required.

Interested persons may submit written comments to J. Ruth Kennedy, Bureau of Health Services Financing, P.O. Box 91030, Baton Rouge, LA 70821-9030. She is responsible for responding to inquiries regarding this Emergency Rule. A copy of this Emergency Rule is available for review by interested parties at parish Medicaid offices.

Bruce D. Greenstein
Secretary

1302#067

DECLARATION OF EMERGENCY

Department of Health and Hospitals
Bureau of Health Services Financing

Home Health Program
Nursing and Home Health Aide Services
Reimbursement Rate Reduction
(LAC 50:XIII.701)

The Department of Health and Hospitals, Bureau of Health Services Financing amends LAC 50:XIII.701 in the Medical Assistance Program as authorized by R.S. 36:254 and pursuant to Title XIX of the Social Security Act and as directed by House Bill 1 of the 2012 Regular Session of the Louisiana Legislature which states: "The secretary is directed to utilize various cost containment measures to ensure expenditures remain at the level appropriated in this Schedule, including but not limited to precertification, preadmission screening, diversion, fraud control, utilization review and management, prior authorization, service limitations, drug therapy management, disease management, cost sharing, and other measures as permitted under federal law." This Emergency Rule is promulgated in accordance with the provisions of the Administrative Procedure Act, R. S. 49:953(B)(1) et seq., and shall be in effect for the maximum period allowed under the Act or until adoption of the final Rule, whichever occurs first

As a result of a budgetary shortfall in state fiscal year 2011, the Department of Health and Hospitals, Bureau of Health Services Financing amended the provisions governing the reimbursement methodology for nursing services covered in the Home Health Program in order to reduce the reimbursement rates paid for extended nursing services (*Louisiana Register*, Volume 37, Number 7).

Due to a budgetary shortfall in state fiscal year 2013, the Department of Health and Hospitals, Bureau of Health Services Financing promulgated an Emergency Rule which amended the provisions governing the reimbursement methodology for intermittent and extended nursing services and home health aide services covered in the Home Health Program in order to reduce the reimbursement rates (*Louisiana Register*, Volume 38, Number 7). This Emergency Rule is being promulgated to continue the provisions of the July 1, 2012 Emergency Rule. This action

is being taken to avoid a budget deficit in the medical assistance programs.

Effective February 28, 2013, the Department of Health and Hospitals, Bureau of Health Services Financing amends the provisions governing the reimbursement methodology for nursing and home health aide services covered in the Home Health Program to reduce the reimbursement rates.

Title 50
PUBLIC HEALTH—MEDICAL ASSISTANCE
Part XIII. Home Health
Subpart 1. Home Health Services
Chapter 7. Reimbursement Methodology
§701. Nursing and Home Health Aide Services

A. - C. …

D. Effective for dates of service on or after July 1, 2012, the reimbursement rates for intermittent and extended nursing services and home health aide services shall be reduced by 3.7 percent of the rates in effect on June 30, 2012.

AUTHORITY NOTE: Promulgated in accordance with R.S. 36:254 and Title XIX of the Social Security Act.

HISTORICAL NOTE: Promulgated by the Department of Health and Hospitals, Office of the Secretary, Bureau of Health Services Financing, LR 34:654 (April 2008), amended by the Department of Health and Hospitals, Bureau of Health Services Financing, LR 36:2281 (October 2010), amended LR 37:2159 (July 2011), LR 39:

Implementation of the provisions of this Rule may be contingent upon the approval of the U.S. Department of Health and Human Services, Centers for Medicare and Medicaid Services (CMS), if it is determined that submission to CMS for review and approval is required.

Interested persons may submit written comments to J. Ruth Kennedy, Bureau of Health Services Financing, P.O. Box 91030, Baton Rouge, LA 70821-9030. She is responsible for responding to inquiries regarding this Emergency Rule. A copy of this Emergency Rule is available for review by interested parties at parish Medicaid offices.

Bruce D. Greenstein
Secretary

1302#068

DECLARATION OF EMERGENCY

Department of Health and Hospitals
Bureau of Health Services Financing

Home Health Services—Cost Reporting Requirements
(LAC 50:XIII.121)

The Department of Health and Hospitals, Bureau of Health Services Financing adopts LAC 50:XIII.Chapter 1 in the Medical Assistance Program as authorized by R.S. 36:254 and pursuant to Title XIX of the Social Security Act. This Emergency Rule is promulgated in accordance with the provisions of the Administrative Procedure Act, R.S. 49:953(B)(1) et seq., and shall be in effect for the maximum period allowed under the Act or until adoption of the final Rule, whichever occurs first.

Act 299 of the 2011 Regular Session of the Louisiana Legislature directed the Department of Health and Hospitals to establish mandatory cost reporting requirements for providers of home and community-based services to verify expenditures and for use in determining appropriate reimbursement rates. In compliance with Act 299, the department promulgated an Emergency Rule which adopted provisions establishing cost reporting requirements for providers of home health services (*Louisiana Register*, Volume 38, Number 7). This Emergency Rule is being promulgated to continue the provisions of the July 1, 2012 Emergency Rule. This action is being taken to promote the health and welfare of Medicaid recipients and to ensure that these services are rendered in an efficient and cost-effective manner.

Effective February 28, 2013, the Department of Health and Hospitals, Bureau of Health Services Financing adopts provisions to establish cost reporting requirements for providers of home health services.

Title 50
PUBLIC HEALTH—MEDICAL ASSISTANCE
Part XIII. Home Health
Subpart 1. Home Health Services
Chapter 1. General Provisions
§121. Cost Reporting Requirements

A. Effective July 1, 2012, the department shall implement mandatory cost reporting requirements for providers of home health services. The cost reports will be used to verify expenditures and to support rate setting for the services rendered to Medicaid recipients.

B. Each home health agency shall complete the DHH approved cost report and submit the cost report(s) to the department no later than five months after the state fiscal year ends (June 30).

AUTHORITY NOTE: Promulgated in accordance with R.S. 36:254 and Title XIX of the Social Security Act.

HISTORICAL NOTE: Promulgated by the Department of Health and Hospitals, Bureau of Health Services Financing, LR 39:

Implementation of the provisions of this Rule may be contingent upon the approval of the U.S. Department of Health and Human Services, Centers for Medicare and Medicaid Services (CMS), if it is determined that submission to CMS for review and approval is required.

Interested persons may submit written comments to J. Ruth Kennedy, Bureau of Health Services Financing, P.O. Box 91030, Baton Rouge, LA 70821-9030. She is responsible for responding to inquiries regarding this Emergency Rule. A copy of this Emergency Rule is available for review by interested parties at parish Medicaid offices.

Bruce D. Greenstein
Secretary

1302#069

DECLARATION OF EMERGENCY

Department of Health and Hospitals
Bureau of Health Services Financing

Hospice Services
(LAC 50:XV.3301, Chapter 35, 3701-3703, 3901, 4101, and Chapter 43)

The Department of Health and Hospitals, Bureau of Health Services Financing, amends LAC 50:XV.Chapters 33-35, §§3701-3703, Chapters 39-41, §§4303-4305, and §4309 under the Medical Assistance Program as authorized

by R.S. 36:254 and pursuant to Title XIX of the Social Security Act. This Emergency Rule is promulgated in accordance with the provisions of the Administrative Procedure Act, R.S. 49:953(B)(1) et seq., and shall be in effect for the maximum period allowed under the Act or until adoption of the final Rule, whichever occurs first.

As a result of a budgetary shortfall in state fiscal year 2009, the Department of Health and Hospitals, Bureau of Health Services Financing amended the provisions governing the reimbursement methodology for hospice services provided to long-term care residents to reduce the reimbursement rates (Louisiana Register, Volume 35, Number 9).

The Department of Health and Hospitals, Bureau of Health Services Financing promulgated an Emergency Rule which amended the provisions governing hospice services in order to bring these provisions into compliance with the requirements of the Patient Protection and Affordable Care Act (PPACA) and also amended the provisions governing prior authorization for hospice services in order to control the escalating costs associated with the Hospice Program (Louisiana Register, Volume 38, Number 3). This Emergency Rule is being promulgated to continue the provisions of the May 1, 2012 Emergency Rule. This action is being taken to avoid sanctions from the U.S. Department of Health and Human Services, Centers for Medicare and Medicaid Services for noncompliance with PPACA requirements, and to avoid a budget deficit in the medical assistance programs.

Effective March 18, 2013, the Department of Health and Hospitals, Bureau of Health Services Financing amends the provisions governing the Hospice Program.

Title 50

PUBLIC HEALTH—MEDICAL ASSISTANCE

Part XV. Services for Special Populations

Subpart 3. Hospice

Chapter 33. Provider Participation

§3301. Conditions for Participation

A. Statutory Compliance

1. Coverage of Medicaid hospice care shall be in accordance with:

a. 42 USC 1396d(o); and

b. the Medicare Hospice Program guidelines as set forth in 42 CFR Part 418.

B. …

AUTHORITY NOTE: Promulgated in accordance with R.S. 36:254.

HISTORICAL NOTE: Promulgated by the Department of Health and Hospitals, Office of the Secretary, Bureau of Health Services Financing, LR 28:1466 (June 2002), amended LR 30:1024 (May 2004), amended by the Department of Health and Hospitals, Bureau of Health Services Financing, LR 39:

Chapter 35. Recipient Eligibility

§3501. Election of Hospice Care

A. - F. …

G. Election Statement Requirements. The election statement must include:

1. identification of the particular hospice that will provide care to the individual;

2. the individual's or his/her legal representative's acknowledgment that he or she has been given a full understanding of the palliative rather than curative nature of hospice care, as it relates to the individual's terminal illness;

3. acknowledgment that certain Medicaid services, as set forth in §3503 are waived by the election;

4. the effective date of the election, which may be the first day of hospice care or a later date, but may be no earlier than the date of the election statement; and

5. the signature of the individual or his/her legal representative.

H. Duration of Election. An election to receive hospice care will be considered to continue through the initial election period and through the subsequent election periods without a break in care as long as the individual:

1. remains in the care of a hospice;

2. does not revoke the election under the provisions of §3505; and

3. is not discharged from hospice in accordance with §3505.

AUTHORITY NOTE: Promulgated in accordance with R.S. 36:254.

HISTORICAL NOTE: Promulgated by the Department of Health and Hospitals, Office of the Secretary, Bureau of Health Services Financing, LR 19:749 (June 1993), amended LR 28:1466 (June 2002), amended by the Department of Health and Hospitals, Bureau of Health Services Financing, LR 39:

§3503. Waiver of Payment for Other Services

A. - A.2.c. …

B. Individuals who are approved to receive hospice may not receive any other non-waiver home and community-based services, such as long-term personal care services, while they are receiving hospice.

AUTHORITY NOTE: Promulgated in accordance with R.S. 36:254.

HISTORICAL NOTE: Promulgated by the Department of Health and Hospitals, Office of the Secretary, Bureau of Health Services Financing, LR 28:1467 (June 2002), amended by the Department of Health and Hospitals, Bureau of Health Services Financing, LR 39:

§3505. Revoking the Election of Hospice Care/Discharge

A. - A.4. …

5. Re-election of Hospice Benefits. If an election has been revoked in accordance with the provisions of this §3505, the individual or his/her representative may at any time file an election, in accordance with §3501, for any other election period that is still available to the individual.

AUTHORITY NOTE: Promulgated in accordance with R.S. 36:254.

HISTORICAL NOTE: Promulgated by the Department of Health and Hospitals, Office of the Secretary, Bureau of Health Services Financing, LR 28:1467 (June 2002), amended by the Department of Health and Hospitals, Bureau of Health Services Financing, LR 39:

Chapter 37. Provider Requirements

§3701. Requirements for Coverage

A. To be covered, a Certification of Terminal Illness must be completed as set forth in §3703, the Election of Hospice Care Form must be completed in accordance with §3501, and a plan of care must be established in accordance with §3705. A written narrative from the referring physician explaining why the patient has a prognosis of six months or less must be included in the Certificate of Terminal Illness. Prior authorization requirements stated in Chapter 41 of these provisions are applicable to all election periods.

AUTHORITY NOTE: Promulgated in accordance with R.S. 36:254.

HISTORICAL NOTE: Promulgated by the Department of Health and Hospitals, Office of the Secretary, Bureau of Health Services Financing, LR 28:1467 (June 2002), amended by the Department of Health and Hospitals, Bureau of Health Services Financing, LR 39:

§3703. Certification of Terminal Illness

A. - A.1.a. …

b. For the first 90-day period of hospice coverage, the hospice must obtain a verbal certification no later than two calendar days after hospice care is initiated If the verbal certification is not obtained within two calendar days following the initiation of hospice care, a written certification must be made within ten calendar days following the initiation of hospice care. The written certification and Notice of Election must be obtained before requesting prior authorization for hospice care. If these requirements are not met, no payment is made for the days prior to the certification. Instead, payment begins with the day of certification, i.e., the date all certification forms are obtained.

c. For the subsequent periods, a written certification must be included in an approved Prior Authorization packet before a claim may be billed.

2. – 2.c. …

d. If verbal certification is made, the referral from the physician shall be received by a member of the hospice interdisciplinary group (IDG). The entry in the patient's clinical record of the verbal certification shall include, at a minimum:

i. - ii. …

iii. terminal diagnosis(es)and all other diagnosis (es);

iv. - v. …

3. Face-to-Face Encounter

a. A hospice physician or hospice nurse practitioner must have a face-to-face encounter with each hospice patient whose total stay across all hospices is anticipated to reach the third benefit period. The face-to-face encounter must occur prior to, but no more than 30 calendar days prior to, the third benefit period recertification, and every benefit period recertification thereafter, to gather clinical findings to determine continued eligibility for hospice care.

b. The physician or nurse practitioner who performs the face-to-face encounter with the patient must attest in writing that he or she had a face-to-face encounter with the patient, including the date of that visit. The attestation of the nurse practitioner or a non-certifying hospice physician shall state that the clinical findings of that visit were provided to the certifying physician for use in determining continued eligibility for hospice care.

4. Content of Certifications

a. Certification will be based on the physician's or medical director's clinical judgment regarding the normal course of the individual's illness. The certification must conform to the following requirements.

i. The certification must specify that the individual's prognosis is for a life expectancy of six months or less if the terminal illness runs its normal course.

ii. Written clinical information and other documentation that support the medical prognosis must accompany the certification and must be filed in the medical record with the written certification, as set forth in Subparagraph 4 of this Section.

iii. The physician must include a brief written narrative explanation of the clinical findings that support a life expectancy of six months or less as part of the certification and recertification forms, or as an addendum to the certification and recertification forms.

(a). The narrative must reflect the patient's individual clinical circumstances and cannot contain check boxes or standard language used for all patients.

(b). The narrative associated with the third benefit period recertification and every subsequent recertification must include an explanation of why the clinical findings of the face-to-face encounter support a life expectancy of six months or less, and shall not be the same narrative as previously submitted.

b. All certifications and recertifications must be signed and dated by the physician(s), and must include the benefit period dates to which the certification or recertification applies.

5. Sources of Certification

a. For the initial 90-day period, the hospice must obtain written certification statements as provided in §3703.A.1 from:

i. …

ii. the individual's attending physician. The attending physician is a doctor of medicine or osteopathy and is identified by the individual, at the time he or she elects to receive hospice care, as having the most significant role in the determination and delivery of the individual's medical care.

The attending physician is the physician identified within the Medicaid system as the provider to which claims have been paid for services prior to the time of the election of hospice benefits.

b. …

6. Maintenance of Records. Hospice staff must make an appropriate entry in the patient's clinical record as soon as they receive an oral certification and file written certifications in the clinical record.

AUTHORITY NOTE: Promulgated in accordance with R.S. 36:254.

HISTORICAL NOTE: Promulgated by the Department of Health and Hospitals, Office of the Secretary, Bureau of Health Services Financing, LR 19:749 (June 1993), amended LR 28:1468 (June 2002), amended by the Department of Health and Hospitals, Bureau of Health Services Financing, LR 39:

Chapter 39. Covered Services

§3901. Medical and Support Services

A. - A.11.b.iv. …

c. Inpatient Respite Care Day. An inpatient respite care day is a day on which the individual receives care in an approved facility on a short-term basis, not to exceed five days in any one election period, to relieve the family members or other persons caring for the individual at home. An approved facility is one that meets the standards as provided in 42 CFR §418.98(b). This service cannot be delivered to individuals already residing in a nursing facility.

d. General Inpatient Care Day. A general inpatient care day is a day on which an individual receives general inpatient care in an inpatient facility that meets the standards as provided in 42 CFR §418.98(a) and for the purpose of pain control or acute or chronic symptom management which cannot be managed in other settings. General inpatient care shall not exceed five days in any one election period.

AUTHORITY NOTE: Promulgated in accordance with R.S. 36:254.

HISTORICAL NOTE: Promulgated by the Department of Health and Hospitals, Office of the Secretary, Bureau of Health Services Financing, LR 28:1468 (June 2002), amended by the Department of Health and Hospitals, Bureau of Health Services Financing, LR 39:

Chapter 41. Prior Authorization

§4101. Prior Authorization of Hospice Services

A. Prior authorization is required for all election periods as specified in §3501.C of this Subpart. The prognosis of terminal illness will be reviewed. A patient must have a terminal prognosis and not just certification of terminal illness. Authorization will be made on the basis that a patient is terminally ill as defined in federal regulations. These regulations require certification of the patient's prognosis, rather than diagnosis. Authorization will be based on objective clinical evidence contained in the clinical record which supports the medical prognosis that the patient's life expectancy is six months or less if the illness runs its normal course and not simply on the patient's diagnosis.

1. Providers shall submit the appropriate forms and documentation required for prior authorization of hospice services as designated by the department in the Medicaid Program's service and provider manuals, memorandums, etc.

B. Written Notice of Denial. In the case of a denial, a written notice of denial shall be submitted to the hospice, recipient, and nursing facility, if appropriate.

1. Claims will only be paid from the date of the Hospice Notice of Election if the prior authorization request is received within 10 days from the date of election and is approved. If the prior authorization request is received 10 days or more after the date on the Hospice Notice of Election, the approved begin date for hospice services is the date the completed prior authorization packet is received.

C. Appeals. If the hospice or the recipient does not agree with the denial of a hospice prior authorization request, the recipient, or the hospice on behalf of the recipient, can request an appeal of the prior authorization decision. The appeal request must be filed with the Division of Administrative Law within 30 days from the date of the postmark on the denial letter. The appeal proceedings will be conducted in accordance with the Administrative Procedure Act.

AUTHORITY NOTE: Promulgated in accordance with R.S. 36:254.

HISTORICAL NOTE: Promulgated by the Department of Health and Hospitals, Office of the Secretary, Bureau of Health Services Financing, LR 28:1470 (June 2002), amended by the Department of Health and Hospitals, Bureau of Health Services Financing, LR 39:

Chapter 43. Reimbursement

§4303. Levels of Care for Payment

A. - B.3. …

C. Inpatient Respite Care. The inpatient respite care rate is paid for each day the recipient is in an approved inpatient facility and is receiving respite care (see §3901.A.11.c). Respite care may be provided only on an occasional basis and payment for respite care may be made for a maximum of five days at a time including the date of admission but not counting the date of discharge. Payment for the day of discharge in a respite setting shall be at the routine home level-of-care discharged alive rate.

1. …

2. Respite care may not be provided when the hospice patient is a nursing home resident, regardless of the setting, i.e., long-term acute care setting.

D. General Inpatient Care. Payment at the inpatient rate is made when an individual receives general inpatient care in an inpatient facility for pain control or acute or chronic symptom management which cannot be managed in other settings. General inpatient care is a short-term level of care and is not intended to be a permanent solution to a negligent or absent caregiver. A lower level of care must be used once symptoms are under control. General inpatient care and nursing facility or intermediate care facility for persons with intellectual disabilities room and board cannot be reimbursed for the same recipient on the same covered days of service. Payment for general inpatient care may be made for a maximum of five days at a time, including the date of admission, but not counting the date of discharge. Payment for the day of discharge in a general inpatient setting shall be at the routine home level-of-care discharged alive rate.

1. - 2. …

AUTHORITY NOTE: Promulgated in accordance with R.S. 36:254.

HISTORICAL NOTE: Promulgated by the Department of Health and Hospitals, Office of the Secretary, Bureau of Health Services Financing, LR 28:1470 (June 2002), amended by the Department of Health and Hospitals, Bureau of Health Services Financing, LR 39:

§4305. Hospice Payment Rates

A. - A.2. …

a. The hospice is paid for other physicians' services, such as direct patient care services, furnished to individual patients by hospice employees and for physician services furnished under arrangements made by the hospice unless the patient care services were furnished on a volunteer basis. The physician visit for the face-to-face encounter will not be reimbursed by the Medicaid Program.

b. - d.ii. …

AUTHORITY NOTE: Promulgated in accordance with R.S. 36:254.

HISTORICAL NOTE: Promulgated by the Department of Health and Hospitals, Office of the Secretary, Bureau of Health Services Financing, LR 28:1470 (June 2002), LR 34:441 (March 2008), amended by the Department of Health and Hospitals, Bureau of Health Services Financing, LR 39:

§4309. Limitation on Payments for Inpatient Care

A. …

1. During the 12-month period beginning November 1 of each year and ending October 31, the number of inpatient days (both for general inpatient care and inpatient respite care) for any one hospice recipient may not exceed five days per occurrence.

2. - 2.b. …

AUTHORITY NOTE: Promulgated in accordance with R.S. 36:254.

HISTORICAL NOTE: Promulgated by the Department of Health and Hospitals, Office of the Secretary, Bureau of Health Services Financing, LR 28:1472 (June 2002), amended by the Department of Health and Hospitals, Bureau of Health Services Financing, LR 39:

Interested persons may submit written comments to J. Ruth Kennedy, Bureau of Health Services Financing, P.O. Box 91030, Baton Rouge, LA 70821-9030. She is responsible for responding to inquiries regarding this

Emergency Rule. A copy of this Emergency Rule is available for review by interested parties at parish Medicaid offices.

Bruce D. Greenstein
Secretary

1302#070

DECLARATION OF EMERGENCY

Department of Health and Hospitals
Bureau of Health Services Financing

Hospice Services—Repeal of New Enrollments Termination

The Department of Health and Hospitals, Bureau of Health Services Financing hereby rescinds the February 1, 2013 Emergency Rule which terminated new enrollments in the Hospice Program covered under the Medical Assistance Program as authorized by R.S. 36:254.This Emergency Rule was adopted on January 7, 2013 and published in the January 20, 2013 edition of the *Louisiana Register*.This Emergency Rule is promulgated in accordance with the provisions of the Administrative Procedure Act, R.S. 49:953(B)(1) et seq., and shall be in effect for the maximum period allowed under the Act or until adoption of the final Rule, whichever occurs first.

The Department of Health and Hospitals, Bureau of Health Services Financing promulgated an Emergency Rule which amended the provisions governing the Hospice Program in order to terminate new enrollments in the program for recipients 21 years of age and older (*Louisiana Register*, Volume 39, Number 1).

Upon further consideration, the department has now determined that it is necessary to rescind the February 1, 2013 Emergency Rule governing the Hospice Program.

Effective January 30, 2013, the Department of Health and Hospitals, Bureau of Health Services Financing rescinds the Emergency Rule governing the Hospice Program which appeared in the January 20, 2013 edition of the *Louisiana Register* on pages 37-38.

Interested persons may submit written comments to J. Ruth Kennedy, Bureau of Health Services Financing, P.O. Box 91030, Baton Rouge, LA 70821-9030. She is responsible for responding to inquiries regarding this Emergency Rule. A copy of this Emergency Rule is available for review by interested parties at parish Medicaid offices.

Bruce D. Greenstein
Secretary

1302#008

DECLARATION OF EMERGENCY

Department of Health and Hospitals
Bureau of Health Services Financing

Inpatient Hospital Services—Major Teaching Hospitals Supplemental Payments (LAC 50:V.1333)

The Department of Health and Hospitals, Bureau of Health Services Financing adopts LAC 50:V.1333 in the Medical Assistance Program as authorized by R.S. 36:254 and pursuant to Title XIX of the Social Security Act. This Emergency Rule is promulgated in accordance with the provisions of the Administrative Procedure Act, R.S. 49:953.B(1) et seq., and shall be in effect for the maximum period allowed under the Act or until adoption of the final Rule, whichever occurs first.

The Department of Health and Hospitals, Office of the Secretary, Bureau of Health Services Financing amended the provisions governing the reimbursement methodology for inpatient hospital services to provide for a supplemental Medicaid payment to non-rural, non-state acute care hospitals for having a Medicaid inpatient utilization greater than 30 percent and teaching hospitals for furnishing additional graduate medical education services as a result of the suspension of training programs at the Medical Center of Louisiana at New Orleans due to the impact of Hurricane Katrina (*Louisiana Register*, Volume 34, Number 5).

The Department of Health and Hospitals, Bureau of Health Services Financing promulgated an Emergency Rule which amended the provisions governing the reimbursement methodology for inpatient hospital services to provide a supplemental Medicaid payment to acute care hospitals designated as major teaching hospitals to facilitate the development of public-private collaborations in order to preserve access to medically necessary services for Medicaid recipients (*Louisiana Register*, Volume 37,Number 6). This Emergency Rule is being promulgated to continue the provisions of the July 1, 2011 Emergency Rule. This action is being taken to promote the health and welfare of Medicaid recipients by encouraging provider participation in the Medicaid Program so as to assure sufficient access to hospital services.

Effective February 25, 2013, the Department of Health and Hospitals, Bureau of Health Services Financing amends the provisions governing the reimbursement methodology for inpatient hospital services rendered by non-rural, non-state hospitals designated as major teaching hospitals.

Title 50
PUBLIC HEALTH—MEDICAL ASSISTANCE
Part V. Hospital Services
Subpart 1. Inpatient Hospitals
Chapter 13. Teaching Hospitals
Subchapter B. Reimbursement Methodology
§1333. Major Teaching Hospitals

A. …

B. Effective for dates of service on or after July 1, 2011, a quarterly supplemental payment shall be issued to non-rural, non-state acute care hospitals for inpatient services rendered during the quarter. These payments shall be used to facilitate the development of public-private collaborations to preserve access to medically necessary services for Medicaid recipients. Aggregate payments to qualifying hospitals shall not exceed the maximum allowable cap for the quarter.

1. Qualifying Criteria. In order to qualify for the supplemental payments the non-rural, non-state acute care hospital must:

a. be designated as a major teaching hospital by the Department of health and Hospitals in state fiscal year 2011;

b. have provided at least 25,000 Medicaid acute care paid days for state fiscal year 2010 dates of service; and

c. have provided at least 5,000 Medicaid distinct part psychiatric unit paid days for state fiscal year 2010 dates of service.

2. Payments shall be distributed quarterly and shall be calculated using the Medicaid paid days for service dates in state fiscal year 2010 as a proxy for SFY 2012 service dates.

3. Payments are applicable to Medicaid service dates provided during the first quarter of state fiscal year 2012 only and shall not exceed $14,000,000.

AUTHORITY NOTE: Promulgated in accordance with R.S. 36:254 and Title XIX of the Social Security Act.

HISTORICAL NOTE: Promulgated by the Department of Health and Hospitals, Bureau of Health Services Financing, LR 39:

Interested persons may submit written comments to J. Ruth Kennedy, Bureau of Health Services Financing, P.O. Box 91030, Baton Rouge, LA 70821-9030. She is responsible for responding to all inquiries regarding this Emergency Rule. A copy of this Emergency Rule is available for review by interested parties at parish Medicaid offices.

Bruce D. Greenstein
Secretary

1302#071

DECLARATION OF EMERGENCY

Department of Health and Hospitals
Bureau of Health Services Financing

Inpatient Hospital Services—Public-Private Partnerships
Supplemental Payments (LAC 50:V.Chapter 17)

The Department of Health and Hospitals, Bureau of Health Services Financing adopts LAC 50:Chapter 17 in the Medical Assistance Program as authorized by R.S. 36:254 and pursuant to Title XIX of the Social Security Act. This Emergency Rule is promulgated in accordance with the provisions of the Administrative Procedure Act, R.S. 49:953(B)(1) et seq., and shall be in effect for the maximum period allowed under the Act or until adoption of the final Rule, whichever occurs first.

The Department of Health and Hospitals, Bureau of Health Services Financing promulgated an Emergency Rule which amended the provisions governing inpatient hospital services to establish supplemental Medicaid payments to non-state owned hospitals in order to encourage them to take over the operation and management of state-owned and operated hospitals that have terminated or reduced services (*Louisiana Register*, Volume 38, Number 11). Participating non-state owned hospitals shall enter into a cooperative endeavor agreement with the department to support this public-provider partnership initiative. This Emergency Rule is being promulgated to continue the provisions of the November 1, 2012 Emergency Rule. This action is being taken to promote the health and welfare of Medicaid recipients by maintaining recipient access to much needed hospital services.

Effective March 2, 2013, the Department of Health and Hospitals, Bureau of Health Services Financing adopts provisions to establish supplemental Medicaid payments for inpatient hospital services provided by non-state owned hospitals participating in public-private partnerships.

Title 50
PUBLIC HEALTH—MEDICAL ASSISTANCE
Part V. Hospital Services
Subpart 1. Inpatient Hospital Services
Chapter 17. Public-Private Partnerships
§1701. Qualifying Hospitals

A. Non-State Privately Owned Hospitals. Effective for dates of service on or after November 1, 2012, the department shall provide supplemental Medicaid payments for inpatient hospital services rendered by non-state privately owned hospitals that meet the following conditions.

1. Qualifying Criteria. The hospital must be a non-state privately owned and operated hospital that enters into a cooperative endeavor agreement with the Department of Health and Hospitals to increase its provision of inpatient Medicaid and uninsured hospital services by:

a. assuming the management and operation of services at a facility where such services were previously provided by a state owned and operated facility; or

b. providing services that were previously delivered and terminated or reduced by a state owned and operated facility.

B. Non-State Publicly Owned Hospitals. Effective for dates of service on or after November 1, 2012, the department shall make supplemental Medicaid payments for inpatient hospital services rendered by non-state publicly owned hospitals that meet the following conditions.

1. Qualifying Criteria. The hospital must be a non-state publicly owned and operated hospital that enters into a cooperative endeavor agreement with the Department of Health and Hospitals to increase its provision of inpatient Medicaid and uninsured hospital services by:

a. assuming the management and operation of services at a facility where such services were previously provided by a state owned and operated facility; or

b. providing services that were previously delivered and terminated or reduced by a state owned and operated facility.

C. Non-State Free-Standing Psychiatric Hospitals. Effective for dates of service on or after November 1, 2012, the department shall make supplemental Medicaid payments for inpatient psychiatric hospital services rendered by non-state privately or publicly owned hospitals that meet the following conditions.

1. Qualifying Criteria. The hospital must be a non-state privately or publicly owned and operated hospital that enters into a cooperative endeavor agreement with the Department of Health and Hospitals to increase its provision of inpatient Medicaid and uninsured psychiatric hospital services by:

a. assuming the management and operation of services at a facility where such services were previously provided by a state owned and operated facility; or

b. providing services that were previously delivered and terminated or reduced by a state owned and operated facility.

AUTHORITY NOTE: Promulgated in accordance with R.S. 36:254 and Title XIX of the Social Security Act.

HISTORICAL NOTE: Promulgated by the Department of Health and Hospitals, Bureau of Health Services Financing, LR 39:

§1703. Reimbursement Methodology

A. Payments to qualifying hospitals shall be made on a quarterly basis in accordance with 42 CFR 447.272.

AUTHORITY NOTE: Promulgated in accordance with R.S. 36:254 and Title XIX of the Social Security Act.

HISTORICAL NOTE: Promulgated by the Department of Health and Hospitals, Bureau of Health Services Financing, LR 39:

Implementation of the provisions of this Rule may be contingent upon the approval of the U.S. Department of Health and Human Services, Centers for Medicare and Medicaid Services (CMS), if it is determined that submission to CMS for review and approval is required.

Interested persons may submit written comments to J. Ruth Kennedy, Bureau of Health Services Financing, P.O. Box 91030, Baton Rouge, LA 70821-9030. She is responsible for responding to inquiries regarding this Emergency Rule. A copy of this Emergency Rule is available for review by interested parties at parish Medicaid offices.

Bruce D. Greenstein
Secretary

1302#072

DECLARATION OF EMERGENCY

Department of Health and Hospitals
Bureau of Health Services Financing

Intermediate Care Facilities for Persons with Developmental Disabilities—Reimbursement Rate Reduction
(LAC 50:VII.32903)

The Department of Health and Hospitals, Bureau of Health Services Financing amends LAC 50:VII.32903 in the Medical Assistance Program as authorized by R.S. 36:254 and pursuant to Title XIX of the Social Security Act and as directed by House Bill 1 of the 2012 Regular Session of the Louisiana Legislature which states: "The secretary is directed to utilize various cost containment measures to ensure expenditures remain at the level appropriated in this Schedule, including but not limited to precertification, preadmission screening, diversion, fraud control, utilization review and management, prior authorization, service limitations, drug therapy management, disease management, cost sharing, and other measures as permitted under federal law." This Emergency Rule is promulgated in accordance with the provisions of the Administrative Procedure Act, R.S. 49:953(B)(1) et seq., and shall be in effect for the maximum period allowed under the Act or until adoption of the final Rule, whichever occurs first.

As a result of a budgetary shortfall in state fiscal year 2011, the Department of Health and Hospitals, Bureau of Health Services Financing amended the provisions governing the reimbursement methodology for non-state ICFs/DD to reduce the per diem rates (*Louisiana Register*, Volume 37, Number 10).

Due to a budgetary shortfall in state fiscal year 2013, the department promulgated an Emergency Rule which amended the provisions governing the reimbursement methodology for non-state ICFs/DD to further reduce the per diem rates (*Louisiana Register*, Volume 38, Number 7). This Emergency Rule is being promulgated to continue the provisions of the July 1, 2012 Emergency Rule. This action is being taken to avoid a budget deficit in the medical assistance programs.

Taking the proposed per diem rate reduction into consideration, the department has carefully reviewed the proposed rates and is satisfied that they are consistent with efficiency, economy and quality of care and are sufficient to enlist enough providers so that private (non-state) intermediate care facility services for persons with developmental disabilities under the State Plan are available at least to the extent that they are available to the general population in the state.

Effective February 28, 2013, the Department of Health and Hospitals, Bureau of Health Services Financing amends the provisions governing the reimbursement methodology for intermediate care facilities for persons with developmental disabilities to reduce the per diem rates.

Title 50
PUBLIC HEALTH—MEDICAL ASSISTANCE
Part VII. Long Term Care
Subpart 3. Intermediate Care Facilities for Persons with Developmental Disabilities
Chapter 329. Reimbursement Methodology
Subchapter A. Non-State Facilities
§32903. Rate Determination

A. - L. …

M. Effective for dates of service on or after July 1, 2012, the per diem rates for non-state intermediate care facilities for persons with developmental disabilities (ICFs/DD) shall be reduced by 1.5 percent of the per diem rates on file as of June 30, 2012.

AUTHORITY NOTE: Promulgated in accordance with R.S. 36:254 and Title XIX of the Social Security Act.

HISTORICAL NOTE: Promulgated by the Department of Health and Hospitals, Office of the Secretary, Bureau of Health Services Financing, LR 31:2253 (September 2005), amended LR 33:462 (March 2007), LR 33:2202 (October 2007), amended by the Department of Health and Hospitals, Bureau of Health Services Financing, LR 36:1555 (July 2010), amended LR 37:3028 (October 2011), LR 39:

Implementation of the provisions of this Rule may be contingent upon the approval of the U.S. Department of Health and Human Services, Centers for Medicare and Medicaid Services (CMS), if it is determined that submission to CMS for review and approval is required.

Interested persons may submit written comments to J. Ruth Kennedy, Bureau of Health Services Financing, P.O. Box 91030, Baton Rouge, LA 70821-9030. She is responsible for responding to inquiries regarding this Emergency Rule. A copy of this Emergency Rule is available for review by interested parties at parish Medicaid offices.

Bruce D. Greenstein
Secretary

1302#073

DECLARATION OF EMERGENCY

Department of Health and Hospitals
Bureau of Health Services Financing

Laboratory and Radiology Services
Reimbursement Rate Reduction
(LAC 50:XIX.4329 and 4334-4337)

The Department of Health and Hospitals, Bureau of Health Services Financing amends LAC 50: XIX.4329 and §§4334-4337 in the Medical Assistance Program as authorized by R.S. 36:254 and pursuant to Title XIX of the Social Security Act and as directed by House Bill 1 of the 2012 Regular Session of the Louisiana Legislature which states: "The secretary is directed to utilize various cost containment measures to ensure expenditures remain at the level appropriated in this Schedule, including but not limited to precertification, preadmission screening, diversion, fraud control, utilization review and management, prior authorization, service limitations, drug therapy management, disease management, cost sharing, and other measures as permitted under federal law." This Emergency Rule is promulgated in accordance with the provisions of the Administrative Procedure Act, R. S. 49:953(B)(1) et seq., and shall be in effect for the maximum period allowed under the Act or until adoption of the final Rule, whichever occurs first.

As a result of a budgetary shortfall in state fiscal year 2011, the Department of Health and Hospitals, Bureau of Health Services Financing amended the provisions governing the reimbursement methodology for laboratory and radiology services to reduce the reimbursement rates (*Louisiana Register*, Volume 37, Number 10).

Due to a budgetary shortfall in state fiscal year 2013, the department promulgated an Emergency Rule which amended the provisions governing the reimbursement methodology for laboratory and radiology services to reduce the reimbursement rates (*Louisiana Register*, Volume 38, Number 7). This Emergency Rule is being promulgated to continue the provisions of the July 1, 2012 Emergency Rule. This action is being taken to avoid a budget deficit in the medical assistance programs.

Effective February 28, 2013, the Department of Health and Hospitals, Bureau of Health Services Financing amends the provisions governing the reimbursement methodology for laboratory and radiology services to reduce the reimbursement rates.

Title 50
PUBLIC HEALTH—MEDICAL ASSISTANCE
Part XIX. Other Services
Subpart 3. Laboratory and X-Ray
Chapter 43. Billing and Reimbursement

§4329. Laboratory Services (Physicians and Independent Laboratories)

A. - J. ...

K. Effective for dates of service on or after July 1, 2012, the reimbursement rates for laboratory services shall be reduced by 3.7 percent of the fee amounts on file as of June 30, 2012.

AUTHORITY NOTE: Promulgated in accordance with R.S. 46:153, R.S. 49:1008(A), P.L. 98-369, and Title XIX of the Social Security Act.

HISTORICAL NOTE: Promulgated by the Department of Health and Hospitals, Office of the Secretary, Bureau of Health Services Financing, LR 28:1025 (May 2002), amended by the Department of Health and Hospitals, Bureau of Health Services Financing, LR 35:1897 (September 2009), LR 36:1248 (June 2010), LR 36:2563 (November 2010), LR 37:3028 (October 2011), LR 39:

§4334. Radiology Services

A. - I. ...

J. Effective for dates of service on or after July 1, 2012, the reimbursement rates for radiology services shall be reduced by 3.7 percent of the fee amounts on file as of June 30, 2012.

AUTHORITY NOTE: Promulgated in accordance with R.S. 36:254 and Title XIX of the Social Security Act.

HISTORICAL NOTE: Promulgated by the Department of Health and Hospitals, Bureau of Health Services Financing, LR 35:1897 (September 2009), amended LR 36:1248 (June 2010), LR 36:2563 (November 2010), LR 37:3029 (October 2011), LR 39:

§4335. Portable Radiology Services

A. - G. …

H. Effective for dates of service on or after July 1, 2012, the reimbursement rates for portable radiology services shall be reduced by 3.7 percent of the fee amounts on file as of June 30, 2012.

AUTHORITY NOTE: Promulgated in accordance with R.S. 36:254 and Title XIX of the Social Security Act.

HISTORICAL NOTE: Promulgated by the Department of Health and Hospitals, Office of the Secretary, Bureau of Health Services Financing, LR 30:1026 (May 2004), amended by the Department of Health and Hospitals, Bureau of Health Services Financing, LR 35:1898 (September 2009), LR 36:1248 (June 2010), LR 36:2563 (November 2010), LR 37:3029 (October 2011), LR 39:

§4337. Radiation Therapy Centers

A. - G. ...

H. Effective for dates of service on or after July 1, 2012, the reimbursement rates for radiology services provided by radiation therapy centers shall be reduced by 3.7 percent of the fee amounts on file as of June 30, 2012.

AUTHORITY NOTE: Promulgated in accordance with R.S. 36:254 and Title XIX of the Social Security Act.

HISTORICAL NOTE: Promulgated by the Department of Health and Hospitals, Bureau of Health Services Financing, LR 35:1898 (September 2009), amended LR 36:1248 (June 2010), LR 36:2563 (November 2010), LR 37:3029 (October 2011), LR 39:

Implementation of the provisions of this Rule may be contingent upon the approval of the U.S. Department of Health and Human Services, Centers for Medicare and Medicaid Services (CMS), if it is determined that submission to CMS for review and approval is required.

Interested persons may submit written comments to J. Ruth Kennedy, Bureau of Health Services Financing, P.O. Box 91030, Baton Rouge, LA 70821-9030. She is responsible for responding to inquiries regarding this Emergency Rule. A copy of this Emergency Rule is available for review by interested parties at parish Medicaid offices.

Bruce D. Greenstein
Secretary

1302#074

DECLARATION OF EMERGENCY

Department of Health and Hospitals
Bureau of Health Services Financing

LaCHIP Affordable Plan
Dental Program—Reimbursement Rate Reduction
(LAC 50:III.20509)

The Department of Health and Hospitals, Bureau of Health Services Financing adopts LAC 50:III.20509 in the Medical Assistance Program as authorized by R.S. 36:254 and pursuant to Title XIX of the Social Security Act and as directed by House Bill 1 of the 2012 Regular Session of the Louisiana Legislature which states: "The secretary is directed to utilize various cost containment measures to ensure expenditures remain at the level appropriated in this Schedule, including but not limited to precertification, preadmission screening, diversion, fraud control, utilization review and management, prior authorization, service limitations, drug therapy management, disease management, cost sharing, and other measures as permitted under federal law." This Emergency Rule is promulgated in accordance with the provisions of the Administrative Procedure Act, R.S. 49:953(B)(1) et seq., and shall be in effect for the maximum period allowed under the Act or until adoption of the final Rule, whichever occurs first.

The Department of Health and Hospitals, Bureau of Health Services Financing adopted provisions to implement phase five of LaCHIP as a stand-alone program under Title XXI provisions to provide coverage to uninsured children whose family income is from 200 percent up to 250 percent of the FPL (*Louisiana Register*, Volume 34, Number 4).

Due to a budgetary shortfall in state fiscal year 2013, the department promulgated an Emergency Rule which adopted provisions governing the reimbursement methodology for the LaCHIP Affordable Plan Dental Program in order to reduce the reimbursement rates (*Louisiana Register*, Volume 38, Number 7). This Emergency Rule is being promulgated to continue the provisions of the July 1, 2012 Emergency Rule. This action is being taken to avoid a budget deficit in the medical assistance programs.

Effective February 28, 2013, the Department of Health and Hospitals, Bureau of Health Services Financing adopts provisions governing the reimbursement methodology for the LaCHIP Affordable Plan Dental Program to reduce the reimbursement rates.

Title 50
PUBLIC HEALTH—MEDICAL ASSISTANCE
Part III. Eligibility
Subpart 11. State Children's Health Insurance Program
Chapter 205. Louisiana Children's Health Insurance Program (LaCHIP) - Phase V
§20509. Dental Services Reimbursement Methodology

A. Services covered in the LaCHIP Affordable Plan Dental Program shall be reimbursed at the lower of either:

1. the dentist's billed charges minus any third party coverage; or

2. the state's established schedule of fees, which is developed in consultation with the Louisiana Dental Association and the Medicaid dental consultants, minus any third party coverage.

B. Effective for dates of service on or after July 1, 2012, the reimbursement fees for LaCHIP Affordable Plan dental services shall be reduced to the following percentages of the 2009 National Dental Advisory Service Comprehensive Fee Report 70th percentile, unless otherwise stated in this Chapter:

1. 65 percent for the following oral evaluation services:
   a. periodic oral examination;
   b. oral examination-patients under 3 years of age; and
   c. comprehensive oral examination-new patients;

2. 62 percent for the following annual and periodic diagnostic and preventive services:
   a. radiographs-periapical, first film;
   b. radiographs-periapical, each additional film;
   c. radiographs-panoramic film;
   d. diagnostic casts;
   e. prophylaxis-adult and child;
   f. topical application of fluoride, adult and child (prophylaxis not included); and
   g. topical fluoride varnish, therapeutic application for moderate to high caries risk patients (under six years of age);

3. 45 percent for the following diagnostic and adjunctive general services:
   a. oral/facial image;
   b. non-intravenous conscious sedation; and
   c. hospital call; and

4. 56 percent for the remainder of the dental services.

C. Removable prosthodontics and orthodontic services are excluded from the July 1, 2012 rate reduction.

AUTHORITY NOTE: Promulgated in accordance with R.S. 36:254 and Title XXI of the Social Security Act.

HISTORICAL NOTE: Promulgated by the Department of Health and Hospitals, Bureau of Health Services Financing, LR 39:

Implementation of the provisions of this Rule may be contingent upon the approval of the U.S. Department of Health and Human Services, Centers for Medicare and Medicaid Services (CMS), if it is determined that submission to CMS for review and approval is required.

Interested persons may submit written comments to J. Ruth Kennedy, Bureau of Health Services Financing, P.O. Box 91030, Baton Rouge, LA 70821-9030. She is responsible for responding to inquiries regarding this Emergency Rule. A copy of this Emergency Rule is available for review by interested parties at parish Medicaid offices.

Bruce D. Greenstein
Secretary

1302#075

DECLARATION OF EMERGENCY

Department of Health and Hospitals
Bureau of Health Services Financing

Medical Transportation Program
Emergency Ambulance Services
Reimbursement Rate Reduction
(LAC 50:XXVII.325 and 353)

The Department of Health and Hospitals, Bureau of Health Services Financing amends LAC 50:XXVII.325 and §353 in the Medical Assistance Program as authorized by R.S. 36:254 and pursuant to Title XIX of the Social Security Act and as directed by House Bill 1 of the 2012 Regular Session of the Louisiana Legislature which states: "The secretary is directed to utilize various cost containment measures to ensure expenditures remain at the level appropriated in this Schedule, including but not limited to precertification, preadmission screening, diversion, fraud control, utilization review and management, prior authorization, service limitations, drug therapy management, disease management, cost sharing, and other measures as permitted under federal law." This Emergency Rule is promulgated in accordance with the provisions of the Administrative Procedure Act, R.S. 49:953(B)(1) et seq., and shall be in effect for the maximum period allowed under the Act or until adoption of the final Rule, whichever occurs first.

As a result of a budgetary shortfall in state fiscal year 2011, the Department of Health and Hospitals, Bureau of Health Services Financing amended the provisions governing the reimbursement methodology for emergency medical transportation services to reduce the reimbursement rates (*Louisiana Register*, Volume 37, Number 10).

As a result of a budgetary shortfall in state fiscal year 2013, the department promulgated an Emergency Rule which amended the provisions governing the reimbursement methodology for emergency medical transportation services to reduce the reimbursement rates (*Louisiana Register*, Volume 38, Number 7). This Emergency Rule is being promulgated to continue the provisions of the July 1, 2012 Emergency Rule. This action is being taken to avoid a budget deficit in the medical assistance programs.

Effective February 28, 2013, the Department of Health and Hospitals, Bureau of Health Services Financing amends the provisions governing the reimbursement methodology for emergency medical transportation services to reduce the reimbursement rates.

Title 50
PUBLIC HEALTH—MEDICAL ASSISTANCE
Part XXVII. Medical Transportation Program
Chapter 3. Emergency Medical Transportation
Subchapter B. Ground Transportation
§325. Reimbursement

A. - H. …

I. Effective for dates of service on or after July 1, 2012, the reimbursement rates for emergency ambulance transportation services shall be reduced by 5.25 percent of the rates on file as of June 30, 2012.

AUTHORITY NOTE: Promulgated in accordance with R.S. 36:254 and Title XIX of the Social Security Act.

HISTORICAL NOTE: Promulgated by the Department of Health and Hospitals, Office of the Secretary, Bureau of Health Services Financing, LR 34:878 (May 2008), amended by the Department of Health and Hospitals, Bureau of Health Services Financing, LR 36:1248 (June 2010), amended LR 36:2564 (November 2010), amended LR 37:3029 (October 2011), LR 39:

Subchapter C. Aircraft Transportation
§353. Reimbursement

A. - F. …

G. Effective for dates of service on or after July 1, 2012, the reimbursement rates for fixed winged and rotor winged emergency air ambulance services shall be reduced by 5.25 percent of the rates on file as of June 30, 2012.

AUTHORITY NOTE: Promulgated in accordance with R.S. 36:254 and Title XIX of the Social Security Act.

HISTORICAL NOTE: Promulgated by the Department of Health and Hospitals, Office of the Secretary, Bureau of Health Services Financing, LR 35:70 (January 2009), amended by the Department of Health and Hospitals, Bureau of Health Services Financing, LR 36:2594 (November 2010), amended LR 37:3029 (October 2011), LR 39:

Implementation of the provisions of this Rule may be contingent upon the approval of the U.S. Department of Health and Human Services, Centers for Medicare and Medicaid Services (CMS), if it is determined that submission to CMS for review and approval is required.

Interested persons may submit written comments to J. Ruth Kennedy, Bureau of Health Services Financing, P.O. Box 91030, Baton Rouge, LA 70821-9030. She is responsible for responding to inquiries regarding this Emergency Rule. A copy of this Emergency Rule is available for review by interested parties at parish Medicaid offices.

Bruce D. Greenstein
Secretary

1302#076

DECLARATION OF EMERGENCY

Department of Health and Hospitals
Bureau of Health Services Financing

Medical Transportation Program
Emergency Ambulance Services
Supplemental Payments
(LAC 50:XXVII.327 and 355)

The Department of Health and Hospitals, Bureau of Health Services Financing amends LAC 50:XXVII.327 and §355 in the Medical Assistance Program as authorized by R.S. 36:254 and pursuant to Title XIX of the Social Security Act. This Emergency Rule is promulgated in accordance with the provisions of the Administrative Procedure Act, R.S. 49:953(B)(1) et seq., and shall be in effect for the maximum period allowed under the Act or until adoption of the final Rule, whichever occurs first.

The Department of Health and Hospitals, Bureau of Health Services Financing provides reimbursement for emergency ambulance transportation services. The department promulgated an Emergency Rule which established supplemental payments for governmental ambulance providers who render emergency medical transportation services to low income and needy patients in the state of Louisiana (*Louisiana Register*, Volume 37,

Number 6). The department promulgated an Emergency Rule which amended the provisions of the July 1, 2011 Emergency Rule to allow supplemental payments for all ambulance providers who render emergency medical transportation services to low income and needy patients (*Louisiana Register*, Volume 37, Number 7). The July 20, 2011 Emergency Rule was amended to allow supplemental payments to providers of air ambulance transportation services (*Louisiana Register*, Volume 37, Number 8). The department promulgated an Emergency Rule which rescinded and replaced the July 1, 2011, the July 20, 2011, and the August 20, 2011 Emergency Rules in order to promulgate clear and concise provisions governing supplemental payments for emergency ambulance services (*Louisiana Register*, Volume 37, Number 9). The department promulgated an Emergency Rule which amended the September 20, 2011 Emergency Rule to clarify the provisions governing supplemental payments for emergency ambulance services (*Louisiana Register*, Volume 37, Number 12). The department promulgated an Emergency Rule which amended the December 20, 2011 Emergency Rule to further clarify the provisions governing supplemental payments for emergency ambulance services (Loui*siana Register*, Volume 38, Number 3). This Emergency Rule is being promulgated to continue the provisions of the March 20, 2012 Emergency Rule. This action is being taken to promote the health and welfare of Medicaid recipients by ensuring continued access to emergency ambulance services.

Effective March 18, 2013, the Department of Health and Hospitals, Bureau of Health Services Financing amends the provisions governing supplemental payments for emergency medical transportation services rendered by ambulance providers.

Title 50
PUBLIC HEALTH—MEDICAL ASSISTANCE
Part XXVII. Medical Transportation Program
Chapter 3. Emergency Medical Transportation
Subchapter B. Ground Transportation
§327. Supplemental Payments for Ambulance Providers

A. Effective for dates of service on or after September 20, 2011, quarterly supplemental payments shall be issued to qualifying ambulance providers for emergency medical transportation services rendered during the quarter.

B. Qualifying Criteria. Ambulance service providers must meet the following requirements in order to qualify to receive supplemental payments. The ambulance service provider must be:

1. licensed by the state of Louisiana;
2. enrolled as a Louisiana Medicaid provider;
3. provider of emergency medical transportation or air ambulance services pursuant to 42 CFR 440.170; and
4. be affiliated with the Statewide Ambulance Service District.

C. Payment Methodology. The supplemental payment to each qualifying ambulance service provider will not exceed the sum of:

1. the difference between the Medicaid payments otherwise made to these qualifying providers for emergency medical transportation and air ambulance services and the average amount that would have been paid at the equivalent community rate; and
2. the difference between the payments made to these qualifying providers for emergency medical transportation and air ambulance services provided to uninsured patients and the average amount that would have been paid at the equivalent community rate.

D. The supplemental payment will be determined in a manner to bring payments for these services up to the community rate level. The community rate is defined as the average amount payable by commercial insurers for the same services.

E. Supplemental Payment Calculation. The following methodology shall be used to establish the quarterly supplemental payment for ambulance providers:

1. The department shall identify Medicaid ambulance service providers that were qualified to receive supplemental Medicaid reimbursement for emergency medical transportation services and air ambulance services during the quarter.
2. For each Medicaid ambulance service provider described in Paragraph E.1, the department shall identify the emergency medical transportation and air ambulance services for which the Medicaid ambulance service providers were eligible to be reimbursed.
3. For each Medicaid ambulance service provider described in Paragraph E.1, the department shall calculate the reimbursement paid to the Medicaid ambulance service providers for the emergency medical transportation and air ambulance services identified under Paragraph E.2.
4. For each Medicaid ambulance service provider described in Paragraph E.1, the department shall calculate the Medicaid ambulance service provider's equivalent community rate for each of the Medicaid ambulance service provider's services identified under E.2.
5. For each Medicaid ambulance service provider described in Paragraph E.1, the department shall subtract an amount equal to the reimbursement calculation for each of the emergency medical transportation and air ambulance services under Paragraph E.3 from an amount equal to the amount calculated for each of the emergency medical transportation and air ambulance services under Paragraph E.4.
6. For each Medicaid ambulance service provider described in Paragraph E.1, the department shall calculate the sum of each of the amounts calculated for emergency medical transportation and air ambulance services under Paragraph E.5.
7. For each Medicaid ambulance service provider described in Paragraph E.1, the department shall calculate each emergency ambulance service provider's upper payment limit by totaling the provider’s total Medicaid payment differential from Paragraph E.6.
8. The department will reimburse providers based on the following criteria:

a. For ambulance service providers identified in Paragraph E.1 located in large urban areas and owned by governmental entities, reimbursement will be up to 130 percent of the provider’s average commercial rate calculated in Paragraph E.7. Aggregate payment will never exceed the maximum as defined in Subsection H. below.

b. For all other ambulance service providers identified in Paragraph E.1 reimbursement will be up to 80 percent of the provider's average commercial rate calculated in Paragraph E.7.

9. - 17. Repealed.

F. Calculation of Average Commercial Rate. The supplemental payment will be determined in a manner to bring payments for these services up to the average commercial rate level.

1. For purposes of these provisions, the average community rate level is defined as the average amount payable by the commercial payers for the same services.

2. The state will align the paid Medicaid claims with the Medicare fees for each HCPCS or CPT code for the ambulance provider and calculate the Medicare payment for those claims. The state will then calculate an overall Medicare to commercial conversion factor for each ambulance provider by dividing the total amount of the average commercial payments for the claims by the total Medicare payments for the claims. The commercial to Medicare ratio for each provider will be re-determined at least every three years.

G. The supplemental payment will be made effective for emergency medical transportation provided on or after September 20, 2011. This payment is based on the average amount that would have been paid at the equivalent community rate. After the initial calculation for fiscal year 2011-2012, the department will rebase the equivalent community rate using adjudicated claims data for services from the most recently completed fiscal year. This calculation may be made annually, but shall be made no less than every three years.

H. The total amount to be paid by the state to qualified Medicaid ambulance service providers for supplemental Medicaid payments shall not exceed the total of the Medicaid payment differentials calculated under §327.E.6 for all qualified Medicaid ambulance service providers.

AUTHORITY NOTE: Promulgated in accordance with R.S. 36:254 and Title XIX of the Social Security Act.

HISTORICAL NOTE: Promulgated by the Department of Health and Hospitals, Bureau of Health Services Financing, LR 39:

Subchapter C. Air Transportation

§355. Supplemental Payments for Ambulance Providers

A. Effective for dates of service on or after September 20, 2011, quarterly supplemental payments shall be issued to qualifying ambulance providers for emergency medical air transportation services rendered during the quarter.

B. Qualifying Criteria. Ambulance service providers must meet the following requirements in order to qualify to receive supplemental payments. The ambulance service provider must be:

1. licensed by the state of Louisiana;

2. enrolled as a Louisiana Medicaid provider;

3. provider of emergency medical transportation or air ambulance services pursuant to 42 CFR 440.170; and

4. be affiliated with the Statewide Ambulance Service District.

C. Payment Methodology. The supplemental payment to each qualifying ambulance service provider will not exceed the sum of:

1. the difference between the Medicaid payments otherwise made to these qualifying providers for emergency medical transportation and air ambulance services and the average amount that would have been paid at the equivalent community rate; and

2. the difference between the payments made to these qualifying providers for emergency medical transportation and air ambulance services provided to uninsured patients and the average amount that would have been paid at the equivalent community rate.

D. The supplemental payment will be determined in a manner to bring payments for these services up to the community rate level. The community rate is defined as the average amount payable by commercial insurers for the same services.

E. Supplemental Payment Calculation. The following methodology shall be used to establish the quarterly supplemental payment for ambulance providers:

1. The department shall identify Medicaid ambulance service providers that were qualified to receive supplemental Medicaid reimbursement for emergency medical transportation services and air ambulance services during the quarter.

2. For each Medicaid ambulance service provider described in Paragraph E.1, the department shall identify the emergency medical transportation and air ambulance services for which the Medicaid ambulance service providers were eligible to be reimbursed.

3. For each Medicaid ambulance service provider described in Paragraph E.1, the department shall calculate the reimbursement paid to the Medicaid ambulance service providers for the emergency medical transportation and air ambulance services identified under E.2.

4. For each Medicaid ambulance service provider described in Paragraph E.1, the department shall calculate the Medicaid ambulance service provider's equivalent community rate for each of the Medicaid ambulance service provider's services identified under Paragraph E.2.

5. For each Medicaid ambulance service provider described in Paragraph E.1, the department shall subtract an amount equal to the reimbursement calculation for each of the emergency medical transportation and air ambulance services under Paragraph E.3 from an amount equal to the amount calculated for each of the emergency medical transportation and air ambulance services under Paragraph E.4.

6. For each Medicaid ambulance service provider described in Paragraph E.1, the department shall calculate the sum of each of the amounts calculated for emergency medical transportation and air ambulance services under Paragraph E.5.

7. For each Medicaid ambulance service provider described in Paragraph E.1, the department shall calculate each emergency ambulance service provider's upper payment limit by totaling the provider's total Medicaid payment differential from Paragraph B.6.

8. The department will reimburse providers based on the following criteria:

a. For ambulance service providers identified in Paragraph E.1. located in large urban areas and owned by governmental entities, reimbursement will be up to 130 percent of the provider's average commercial rate calculated in Paragraph E.7. Aggregate payment will never exceed the maximum as defined in Section H.

b. For all other ambulance service providers identified in Paragraph E.1. reimbursement will be up to 80 percent of the provider's average commercial rate calculated in Paragraph E.7.

9. - 17. Repealed.

F. Calculation of Average Commercial Rate. The supplemental payment will be determined in a manner to bring payments for these services up to the average commercial rate level.

1. For purposes of these provisions, the average commercial rate level is defined as the average amount payable by the commercial payers for the same services.

2. The state will align the paid Medicaid claims with the Medicare fees for each HCPCS or CPT code for the ambulance provider and calculate the Medicare payment for those claims. The state will then calculate an overall Medicare to commercial conversion factor for each ambulance provider by dividing the total amount of the average commercial payments for the claims by the total Medicare payments for the claims. The commercial to Medicare ratio for each provider will be re-determined at least every three years.

G. The supplemental payment will be made effective for air ambulance services provided on or after September 20, 2011. This payment is based on the average amount that would have been paid at the equivalent community rate. After the initial calculation for fiscal year 2011-2012, the department will rebase the equivalent community rate using adjudicated claims data for services from the most recently completed fiscal year. This calculation may be made annually, but shall not be made less often than every three years.

H. The total amount to be paid by the state to qualified Medicaid ambulance service providers for supplemental Medicaid payments shall not exceed the total of the Medicaid payment differentials calculated under §327.E.6 for all qualified Medicaid ambulance service providers.

AUTHORITY NOTE: Promulgated in accordance with R.S. 36:254 and Title XIX of the Social Security Act.

HISTORICAL NOTE: Promulgated by the Department of Health and Hospitals, Bureau of Health Services Financing, LR 39:

Implementation of the provisions of this Rule may be contingent upon the approval of the U.S. Department of Health and Human Services, Centers for Medicare and Medicaid Services (CMS), if it is determined that submission to CMS for review and approval is required.

Interested persons may submit written comments to J. Ruth Kennedy, Bureau of Health Services Financing, P.O. Box 91030, Baton Rouge, LA 70821-9030. She is responsible for responding to inquiries regarding this Emergency Rule. A copy of this Emergency Rule is available for review by interested parties at parish Medicaid offices.

Bruce D. Greenstein
Secretary

1302#077

DECLARATION OF EMERGENCY

Department of Health and Hospitals
Bureau of Health Services Financing

Nursing Facilities—Reimbursement Methodology
Low Income and Needy Care Collaboration
(LAC 50:II.20023)

The Department of Health and Hospitals, Bureau of Health Services Financing adopts LAC 50:II.20023 in the Medical Assistance Program as authorized by R.S. 36:254 and pursuant to Title XIX of the Social Security Act. This Emergency Rule is promulgated in accordance with the provisions of the Administrative Procedure Act, R.S. 49:953(B)(1) et seq., and shall be in effect for the maximum period allowed under the Act or until adoption if the final Rule, whichever occurs first.

The Department of Health and Hospitals, Bureau of Health Services Financing promulgated an Emergency Rule which amended the provisions governing the reimbursement methodology for nursing facilities to adopt provisions to establish a supplemental Medicaid payment for nursing facilities who enter into an agreement with a state or local governmental entity for the purpose of providing health care services to low income and needy patients (*Louisiana Register*, Volume 37, Number 11). This Emergency Rule is being promulgated to continue the provisions of the November 1, 2011 Emergency Rule. This action is being taken to secure new federal funding and to promote the public health and welfare of Medicaid recipients by ensuring sufficient provider participation.

Effective February 27, 2013, the Department of Health and Hospitals, Bureau of Health Services Financing amends the provisions governing the reimbursement methodology for nursing facilities to establish a supplemental Medicaid payment to nursing facilities who participate in the Low Income and Needy Care Collaboration.

Title 50
PUBLIC HEALTH—MEDICAL ASSISTANCE
Part II. Nursing Facilities
Subpart 5. Reimbursement
Chapter 200. Reimbursement Methodology
§20023. Low Income and Needy Care Collaboration

A. Effective for dates of service on or after November 1, 2011, quarterly supplemental payments shall be issued to qualifying nursing facilities for services rendered during the quarter. Maximum aggregate payments to all qualifying nursing facilities shall not exceed the available upper payment limit per state fiscal year.

B. Qualifying Criteria. In order to qualify for the supplemental payment, the nursing facility must be affiliated with a state or local governmental entity through a Low Income and Needy Care Nursing Facility Collaboration Agreement.

1. A nursing facility is defined as a currently licensed and certified nursing facility which is owned or operated by a private entity or non-state governmental entity.

2. A Low Income and Needy Care Nursing Facility Collaboration Agreement is defined as an agreement between a nursing facility and a state or local governmental entity to collaborate for purposes of providing healthcare services to low income and needy patients.

C. Each qualifying nursing facility shall receive quarterly supplemental payments for nursing facility services. Quarterly payment distribution shall be limited to one-fourth of the aggregated difference between each qualifying nursing facility's Medicare rate and Medicaid payments the nursing facility receives for covered services provided to Medicaid recipients during a 12 consecutive month period. Medicare rates in effect for the dates of service included in the supplemental payment period will be used to establish the upper payment limit. Medicaid payments will be used for the same time period.

AUTHORITY NOTE: Promulgated in accordance with R.S. 36:254 and Title XIX of the Social Security Act.

HISTORICAL NOTE: Promulgated by the Department of Health and Hospitals, Bureau of Health Services Financing, LR 39:

Implementation of the provisions of this Rule may be contingent upon the approval of the U.S. Department of Health and Human Services, Centers for Medicare and Medicaid Services (CMS), if it is determined that submission to CMS for review and approval is required.

Interested persons may submit written comments to J. Ruth Kennedy, Bureau of Health Services Financing, P.O. Box 91030, Baton Rouge, LA 70821-9030. She is responsible for responding to inquiries regarding this Emergency Rule. A copy of this Emergency Rule is available for review by interested parties at parish Medicaid offices.

Bruce D. Greenstein
Secretary

1302#078

DECLARATION OF EMERGENCY

Department of Health and Hospitals
Bureau of Health Services Financing

Nursing Facilities
Reimbursement Methodology
Private Room Conversions
(LAC 50:II.20010)

The Department of Health and Hospitals, Bureau of Health Services Financing amends LAC 50:II.20010 in the Medical Assistance Program as authorized by R.S. 36:254 and pursuant to Title XIX of the Social Security Act. This Emergency Rule is promulgated in accordance with the provisions of the Administrative Procedure Act, R.S. 49:953(B)(1) et seq., and shall be in effect for the maximum period allowed under the Act or until adoption if the final Rule, whichever occurs first.

The Department of Health and Hospitals, Office of the Secretary, Bureau of Health Services Financing amended the provisions governing the reimbursement methodology for nursing facilities to allow for additional payments for private room conversions when a Medicaid participating nursing facility converts one or more semi-private rooms to private rooms for occupancy by Medicaid recipients (*Louisiana Register*, Volume 33, Number 8). Act 150 of the 2010 Regular Session of the Louisiana Legislature directed the department to increase the fair rental value minimum occupancy percentage from 70 percent to 85 percent. The department promulgated an Emergency Rule which amended the provisions governing the reimbursement methodology for nursing facilities to ensure that the provisions governing private room conversions are consistent with the increase in the fair rental value minimum occupancy percentage which was adopted on July 1, 2011 (*Louisiana Register*, Volume 37, Number 10). This Emergency Rule is being promulgated to continue the provisions of the November 1, 2011 Emergency Rule. This action is being taken in order to avoid a budget deficit in the medical assistance programs.

Effective February 27, 2013, the Department of Health and Hospitals, Bureau of Health Services Financing amends the provisions governing the reimbursement methodology for nursing facilities.

Title 50
PUBLIC HEALTH—MEDICAL ASSISTANCE
Part II. Nursing Facilities
Subpart 5. Reimbursement
Chapter 200. Reimbursement Methodology
§20010. Additional Payments and Square Footage Adjustments for Private Room Conversion [Formerly LAC 50:VII.1310]

A. - D.2.c. ...

3. Resident days used in the fair rental value per diem calculation will be the greater of the annualized actual resident days from the base year cost report or 85 percent of the revised annual bed days available after the change in licensed beds.

D.4 - E.2. ...

AUTHORITY NOTE: Promulgated in accordance with R.S. 36:254, R.S. 46:2742, and Title XIX of the Social Security Act.

HISTORICAL NOTE: Promulgated by the Department of Health and Hospitals, Office of the Secretary, Bureau of Health Services Financing, LR 33:1646 (August 2007), amended by the Department of Health and Hospitals, Bureau of Health Services Financing, LR 39:

Interested persons may submit written comments to J. Ruth Kennedy, Bureau of Health Services Financing, P.O. Box 91030, Baton Rouge, LA 70821-9030. She is responsible for responding to inquiries regarding this Emergency Rule. A copy of this Emergency Rule is available for review by interested parties at parish Medicaid offices.

Bruce D. Greenstein
Secretary

1302#079

DECLARATION OF EMERGENCY

Department of Health and Hospitals
Bureau of Health Services Financing

Nursing Facilities—Reimbursement Rate Reduction
After State Fiscal Year 2013 (LAC 50:II.20005)

The Department of Health and Hospitals, Bureau of Health Services Financing amends LAC 50:II.20005 in the Medical Assistance Program as authorized by R.S. 36:254 and pursuant to Title XIX of the Social Security Act and as directed by House Bill 1 of the 2012 Regular Session of the Louisiana Legislature which states: "The secretary is directed to utilize various cost containment measures to ensure expenditures remain at the level appropriated in this Schedule, including but not limited to precertification, preadmission screening, diversion, fraud control, utilization review and management, prior authorization, service limitations, drug therapy management, disease management, cost sharing, and other measures as permitted under federal law." This Emergency Rule is promulgated in accordance with the provisions of the Administrative Procedure Act, R.S. 49:953(B)(1)et seq., and shall be in effect for the maximum period allowed under the Act or until adoption of the final Rule, whichever occurs first.

The Department of Health and Hospitals, Bureau of Health Services Financing amended the provisions governing the reimbursement methodology for nursing facilities to reduce the per diem rates paid to non-state nursing facilities in order to remove the rebased amount and sunset the 2011-2012 nursing facility rate rebasing (*Louisiana Register*, Volume 38, Number 5).

As a result of a budgetary shortfall in state fiscal year 2013, the department promulgated an Emergency Rule which amended the provisions governing the reimbursement methodology for non-state nursing facilities to further reduce the reimbursement rates (*Louisiana Register*, Volume 38, Number 7).

The Department of Health and Hospitals, Bureau of Health Services Financing promulgated an Emergency Rule which amended the provisions of the July 1, 2012 Emergency Rule governing the SFY 2013 rate reduction to revise the reduction of the per diem rate (*Louisiana Register*, Volume 38, Number 8). This Emergency Rule is being promulgated to continue the provisions of the July 20, 2012 Emergency Rule. This action is being taken to avoid a budget deficit in the medical assistance programs.

Effective March 19, 2013, the Department of Health and Hospitals, Bureau of Health Services Financing amends the provisions governing the reimbursement methodology for non-state nursing facilities.

Title 50
PUBLIC HEALTH—MEDICAL ASSISTANCE
Part II. Nursing Facilities
Subpart 5. Reimbursement
Chapter 200. Reimbursement Methodology
§20005. Rate Determination
[Formerly LAC 50:VII.1305]

A. - K. …

L. Effective for dates of service on or after July 20, 2012, the average daily rates for non-state nursing facilities shall be reduced by 1.15 percent per day of the average daily rate on file as of July 19, 2012 after the sunset of the state fiscal year 2012 rebase and after the state fiscal year 2013 rebase.

AUTHORITY NOTE: Promulgated in accordance with R.S. 36:254 and Title XIX of the Social Security Act.

HISTORICAL NOTE: Promulgated by the Department of Health and Hospitals, Office of the Secretary, Bureau of Health Services Financing, LR 28:1791 (August 2002), amended LR 31:1596 (July 2005), LR 32:2263 (December 2006), LR 33:2203 (October 2007), amended by the Department of Health and Hospitals, Bureau of Health Services Financing, LR 36:325 (February 2010), repromulgated LR 36:520 (March 2010), amended LR 36:1556 (July 2010), LR 36:1782 (August 2010), LR 36:2566 (November 2010), amended LR 37:902 (March 2011), LR 37:1174 (April 2011), amended LR 37:2631 (September 2011), LR 38:1241 (May 2012), LR 39:

Implementation of the provisions of this Rule may be contingent upon the approval of the U.S. Department of Health and Human Services, Centers for Medicare and Medicaid Services (CMS), if it is determined that submission to CMS for review and approval is required.

Interested persons may submit written comments to J. Ruth Kennedy, Bureau of Health Services Financing, P.O. Box 91030, Baton Rouge, LA 70821-9030. She is responsible for responding to inquiries regarding this Emergency Rule. A copy of this Emergency Rule is available for review by interested parties at parish Medicaid offices.

Bruce D. Greenstein
Secretary

1302#080

DECLARATION OF EMERGENCY

Department of Health and Hospitals
Bureau of Health Services Financing

Nursing Facilities—Reimbursement Rate Reduction
Before State Fiscal Year 2013 (LAC 50:II.20005)

The Department of Health and Hospitals, Bureau of Health Services Financing amends LAC 50:II.20005 in the Medical Assistance Program as authorized by R.S. 36:254 and pursuant to Title XIX of the Social Security Act and as directed by House Bill 1 of the 2012 Regular Session of the Louisiana Legislature which states: "The secretary is directed to utilize various cost containment measures to ensure expenditures remain at the level appropriated in this Schedule, including but not limited to precertification, preadmission screening, diversion, fraud control, utilization review and management, prior authorization, service limitations, drug therapy management, disease management, cost sharing, and other measures as permitted under federal law." This proposed Rule is promulgated in accordance with the provisions of the Administrative Procedure Act, R.S. 49: 953(B)(1) et seq., and shall be in effect for the maximum period allowed under the Act or until adoption of the final Rule, whichever occurs first.

The Department of Health and Hospitals, Bureau of Health Services Financing amended the provisions governing the reimbursement methodology for nursing facilities to reduce the per diem rates paid to non-state nursing facilities in order to remove the rebased amount and

sunset the 2011-2012 nursing facility rate rebasing (*Louisiana Register*, Volume 38, Number 5).

As a result of a budgetary shortfall in state fiscal year 2013, the department promulgated an Emergency Rule which amended the provisions governing the reimbursement methodology for non-state nursing facilities to reduce the reimbursement rates (*Louisiana Register*, Volume 38, Number 7). This Emergency Rule is being promulgated to continue the provisions of the July 1, 2012 Emergency Rule). This action is being taken to avoid a budget deficit in the medical assistance programs.

Effective February 28, 2013, the Department of Health and Hospitals, Bureau of Health Services Financing amends the provisions governing the reimbursement methodology for non-state nursing facilities to reduce the reimbursement rates.

Title 50
PUBLIC HEALTH—MEDICAL ASSISTANCE
Part II. Nursing Facilities
Subpart 5. Reimbursement
Chapter 200. Reimbursement Methodology
§20005. Rate Determination
[Formerly LAC 50:VII.1305]

A. - I. …

J. Effective for dates of service on or after July 1, 2012, the average daily rates for non-state nursing facilities shall be reduced by $4.11 per day of the average daily rate on file as of June 30, 2012 after the sunset of the state fiscal year 2012 rebase and before the state fiscal year 2013 rebase.

AUTHORITY NOTE: Promulgated in accordance with R.S. 36:254 and Title XIX of the Social Security Act.

HISTORICAL NOTE: Promulgated by the Department of Health and Hospitals, Office of the Secretary, Bureau of Health Services Financing, LR 28:1791 (August 2002), amended LR 31:1596 (July 2005), LR 32:2263 (December 2006), LR 33:2203 (October 2007), amended by the Department of Health and Hospitals, Bureau of Health Services Financing, LR 36:325 (February 2010), repromulgated LR 36:520 (March 2010), amended LR 36:1556 (July 2010), LR 36:1782 (August 2010), LR 36:2566 (November 2010), amended LR 37:902 (March 2011), LR 37:1174 (April 2011), amended LR 37:2631 (September 2011), LR 38:1241 (May 2012), LR 39:

Implementation of the provisions of this Rule may be contingent upon the approval of the U.S. Department of Health and Human Services, Centers for Medicare and Medicaid Services (CMS), if it is determined that submission to CMS for review and approval is required.

Interested persons may submit written comments to J. Ruth Kennedy, Bureau of Health Services Financing, P.O. Box 91030, Baton Rouge, LA 70821-9030. She is responsible for responding to inquiries regarding this Emergency Rule. A copy of this Emergency Rule is available for review by interested parties at parish Medicaid offices.

Bruce D. Greenstein
Secretary

1302#081

DECLARATION OF EMERGENCY

Department of Health and Hospitals
Bureau of Health Services Financing

Pediatric Day Health Care Program
Reimbursement Rate Reduction
(LAC 50:XV.28101)

The Department of Health and Hospitals, Bureau of Health Services Financing amends LAC 50:XV.28101 in the Medical Assistance Program as authorized by R.S. 36:254 and pursuant to Title XIX of the Social Security Act and as directed by House Bill 1 of the 2012 Regular Session of the Louisiana Legislature which states: "The secretary is directed to utilize various cost containment measures to ensure expenditures remain at the level appropriated in this Schedule, including but not limited to precertification, preadmission screening, diversion, fraud control, utilization review and management, prior authorization, service limitations, drug therapy management, disease management, cost sharing, and other measures as permitted under federal law." This Emergency Rule is promulgated in accordance with the provisions of the Administrative Procedure Act, R.S. 49:953(B)(1) et seq., and shall be in effect for the maximum period allowed under the Act or until adoption of the final Rule, whichever occurs first.

The Department of Health and Hospitals, Bureau of Health Services Financing adopted provisions to implement pediatric day health care services as an optional covered service in the Medical Assistance Program (*Louisiana Register*, Volume 36, Number 7).

Due to a budgetary shortfall in state fiscal year 2013, the department promulgated an Emergency Rule which amended the provisions governing the reimbursement methodology for pediatric day health care services to reduce the reimbursement rates (*Louisiana Register*, Volume 38, Number 7). This Emergency Rule is being promulgated to continue the provisions of the July 1, 2012 Emergency Rule. This action is being taken to avoid a budget deficit in the medical assistance programs.

Effective February 28, 2013, the Department of Health and Hospitals, Bureau of Health Services Financing amends the provisions governing the reimbursement methodology for pediatric day health care services to reduce the reimbursement rates.

Title 50
PUBLIC HEALTH—MEDICAL ASSISTANCE
Part XV. Services for Special Populations
Subpart 19. Pediatric Day Health Care
Chapter 281. Reimbursement Methodology
§28101. General Provisions

A. - B. ...

C. Effective for dates of service on or after July 1, 2012, the reimbursement for pediatric day health care services shall be reduced by 3.7 percent of the rates in effect on June 30, 2012.

AUTHORITY NOTE: Promulgated in accordance with R.S. 36:254 and Title XIX of the Social Security Act.

HISTORICAL NOTE: Promulgated by the Department of Health and Hospitals, Bureau of Health Services Financing, LR 36:1558 (July 2010), amended LR 39:

Implementation of the provisions of this Rule may be contingent upon the approval of the U.S. Department of Health and Human Services, Centers for Medicare and Medicaid Services (CMS), if it is determined that submission to CMS for review and approval is required.

Interested persons may submit written comments to J. Ruth Kennedy, Bureau of Health Services Financing, P.O. Box 91030, Baton Rouge, LA 70821-9030. She is responsible for responding to inquiries regarding this Emergency Rule. A copy of this Emergency Rule is available for review by interested parties at parish Medicaid offices.

Bruce D. Greenstein
Secretary

1302#082

DECLARATION OF EMERGENCY

Department of Health and Hospitals
Bureau of Health Services Financing
and
Office of Aging and Adult Services

Personal Care Services—Long Term
Cost Reporting Requirements (LAC 50:XV.12919)

The Department of Health and Hospitals, Bureau of Health Services Financing and the Office of Aging and Adult Services adopt LAC 50:XV.12919 in the Medical Assistance Program as authorized by R.S. 36:254 and pursuant to Title XIX of the Social Security Act. This Emergency Rule is promulgated in accordance with the provisions of the Administrative Procedure Act, R.S. 49:953(B)(1) et seq., and shall be in effect for the maximum period allowed under the Act or until adoption of the final Rule, whichever occurs first.

Act 299 of the 2011 Regular Session of the Louisiana Legislature directed the Department of Health and Hospitals to establish mandatory cost reporting requirements for providers of home and community-based services to verify expenditures and for use in determining appropriate reimbursement rates. In compliance with Act 299, the Department of Health and Hospitals, Bureau of Health Services Financing and the Office of Aging and Adult Services promulgated an Emergency Rule which adopted provisions establishing cost reporting requirements for providers of long-term personal care services (*Louisiana Register*, Volume 38, Number 7). This Emergency Rule is being promulgated to continue the provisions of the July 1, 2012 Emergency Rule. This action is being taken to promote the health and welfare of Medicaid recipients and to ensure that these services are rendered in an efficient and cost-effective manner

Effective February 28, 2013, the Department of Health and Hospitals, Bureau of Health Services Financing and the Office of Aging and Adult Services adopt provisions to establish cost reporting requirements for providers of long-term personal care services.

Title 50
PUBLIC HEALTH—MEDICAL ASSISTANCE
Part XV. Services for Special Populations
Subpart 9. Personal Care Services
Chapter 129. Long Term Care
§12919. Cost Reporting Requirements

A. Effective July 1, 2012, the department shall implement mandatory cost reporting requirements for providers of long-term personal care services. The cost reports will be used to verify expenditures and to support rate setting for the services rendered to Medicaid recipients.

B. Each LT-PCS provider shall complete the DHH approved cost report and submit the cost report(s) to the department no later than five months after the state fiscal year ends (June 30).

AUTHORITY NOTE: Promulgated in accordance with R.S. 36:254 and Title XIX of the Social Security Act.

HISTORICAL NOTE: Promulgated by the Department of Health and Hospitals, Bureau of Health Services Financing and the Office of Aging and Adult Services, LR 39:

Implementation of the provisions of this Rule may be contingent upon the approval of the U.S. Department of Health and Human Services, Centers for Medicare and Medicaid Services (CMS), if it is determined that submission to CMS for review and approval is required.

Interested persons may submit written comments to J. Ruth Kennedy, Bureau of Health Services Financing, P.O. Box 91030, Baton Rouge, LA 70821-9030. She is responsible for responding to inquiries regarding this Emergency Rule. A copy of this Emergency Rule is available for review by interested parties at parish Medicaid offices.

Bruce D. Greenstein
Secretary

1302#083

DECLARATION OF EMERGENCY

Department of Health and Hospitals
Bureau of Health Services Financing
and
Office of Aging and Adult Services

Personal Care Services—Long Term
Reimbursement Rate Reduction (LAC 50:XV.12917)

The Department of Health and Hospitals, Bureau of Health Services Financing and the Office of Aging and Adult Services amend LAC 50:XV.12917 in the Medical Assistance Program as authorized by R.S. 36:254 and pursuant to Title XIX of the Social Security Act and as directed by House Bill 1 of the 2012 Regular Session of the Louisiana Legislature which states: "The secretary is directed to utilize various cost containment measures to ensure expenditures remain at the level appropriated in this Schedule, including but not limited to precertification, preadmission screening, diversion, fraud control, utilization review and management, prior authorization, service limitations, drug therapy management, disease management, cost sharing, and other measures as permitted under federal law." This Emergency Rule is promulgated in accordance with the provisions of the Administrative Procedure Act, R.S. 49:953(B)(1) et seq., and shall be in effect for the

maximum period allowed under the Act or until adoption of the final Rule, whichever occurs first.

Due to a continuing budgetary shortfall, the Department of Health and Hospitals, Bureau of Health Services Financing amended the provisions governing the reimbursement methodology for long-term personal care services to reduce the reimbursement rates (Louisiana Register, Volume 37, Number 11).

As a result of a budgetary shortfall in state fiscal year 2013, the department promulgated an Emergency Rule which amended the provisions governing the reimbursement methodology for long-term personal care services to reduce the reimbursement rates (*Louisiana Register*, Volume 38, Number 7). This Emergency Rule is being promulgated to continue the provisions of the July 1, 2012 Emergency Rule. This action is being taken to avoid a budget deficit in the medical assistance programs.

Effective February 28, 2013, the Department of Health and Hospitals, Bureau of Health Services Financing amends the provisions governing the reimbursement methodology for long-term personal care services to reduce the reimbursement rates.

Title 50
PUBLIC HEALTH—MEDICAL ASSISTANCE
Part XV. Services for Special Populations
Subpart 9. Personal Care Services
Chapter 129. Long-Term Care
§12917. Reimbursement Methodology

A. - H.2....

I. Effective for dates of service on or after July 1, 2012, the reimbursement rate for long-term personal care services furnished to one participant shall be reduced by 1.5 percent of the rate on file as of June 30, 2012.

AUTHORITY NOTE: Promulgated in accordance with R.S. 36:254 and Title XIX of the Social Security Act.

HISTORICAL NOTE: Promulgated by the Department of Health and Hospitals, Office of the Secretary, Bureau of Health Services Financing, LR 29:913 (June 2003), amended by the Department of Health and Hospitals, Office of Aging and Adult Services, LR 34:253 (February 2008), LR 34:2581 (December 2008), amended by the Department of Health and Hospitals, Bureau of Health Services Financing and the Office of Aging and Adult Services, LR 35:1901 (September 2009), LR 36:1251 (June 2010), LR 37:3267 (November 2011), LR 39:

Implementation of the provisions of this Rule may be contingent upon the approval of the U.S. Department of Health and Human Services, Centers for Medicare and Medicaid Services (CMS), if it is determined that submission to CMS for review and approval is required.

Interested persons may submit written comments to J. Ruth Kennedy, Bureau of Health Services Financing, P.O. Box 91030, Baton Rouge, LA 70821-9030. She is responsible for responding to inquiries regarding this Emergency Rule. A copy of this Emergency Rule is available for review by interested parties at parish Medicaid offices.

Bruce D. Greenstein
Secretary

1302#084

DECLARATION OF EMERGENCY

Department of Health and Hospitals
Bureau of Health Services Financing

Pharmacy Benefits Management Program
Methods of Payment (LAC 50:XXIX.105 and Chapter 9)

The Department of Health and Hospitals, Bureau of Health Services Financing amends LAC 50:XXIX.105 and Chapter 9 in the Medical Assistance Program as authorized by R.S. 36:254 and pursuant to Title XIX of the Social Security Act. This Emergency Rule is promulgated in accordance with the provisions of the Administrative Procedure Act, R.S. 49:953(B)(1) et seq., and shall be in effect for the maximum period allowed under the Act or until adoption of the final Rule, whichever occurs first.

The Department of Health and Hospitals, Bureau of Health Services Financing provides coverage and reimbursement for prescription drugs to Medicaid eligible recipients enrolled in the Medicaid Program. Act 10 of the 2009 Regular Session of the Louisiana Legislature provided that the department may redefine the reimbursement methodology for multiple source drugs in establishing the state maximum allowable cost (MAC) in order to control expenditures to the level of appropriations for the Medicaid Program. In accordance with the provisions of Act 10, the department promulgated an Emergency Rule to redefine the Louisiana maximum allowable cost (LMAC) (*Louisiana Register*, Volume 36, Number 1). In addition, the dispensing fee was increased for drugs with an LMAC.

The department subsequently determined that it was necessary to repeal the January 1, 2010 Emergency Rule in its entirety and amend the provisions governing the methods of payment for prescription drugs to redefine the LMAC (*Louisiana Register*, Volume 36, Number 2). The department promulgated an Emergency Rule to amend the February 1, 2010 Emergency Rule to revise the provisions governing the methods of payment for prescription drugs to further redefine the LMAC and increase the dispensing fee (*Louisiana Register*, Volume 36, Number 3). The department determined that it was necessary to repeal the March 1, 2010 Emergency Rule in its entirety and promulgated an Emergency Rule to amend the provisions governing the methods of payment for prescription drugs to revise the LMAC provisions (*Louisiana Register*, Volume 36, Number 3). The department subsequently promulgated an Emergency Rule to repeal the March 20, 2010 Emergency Rule in its entirety in order to revise the provisions governing the methods of payment for prescription drugs and the dispensing fee (*Louisiana Register*, Volume 38, Number 9).

The department promulgated an Emergency Rule which amended the provisions of the September 5, 2012 Emergency Rule to further revise the provisions governing the methods of payment for prescription drugs and the dispensing fee (*Louisiana Register*, Volume 38, Number 11). This Emergency Rule is being promulgated to continue the provisions of the November 1, 2012 Emergency Rule. This

action is being taken to avoid a budget deficit in the medical assistance programs.

Effective March 2, 2013, the Department of Health and Hospitals, Bureau of Health Services Financing amends the provisions governing the methods of payment for prescription drugs covered under the Pharmacy Benefits Management Program.

Title 50
PUBLIC HEALTH—MEDICAL ASSISTANCE
Part XXIX. Pharmacy

Chapter 1. General Provisions

§105. Medicaid Pharmacy Benefits Management System Point of Sale—Prospective Drug Utilization Program

A - B. …

C. Formulary Management. The formulary is managed through the use of federal upper limits (FUL). Federal upper limits provide for dispensing of multiple source drugs at established limitations unless the prescribing physician specifies that the brand product is medically necessary for a patient. Establishment of co-payments also provides for formulary management. The Medicaid Program has established a broad formulary with limited exceptions.

D. Reimbursement Management. The cost of pharmaceutical care is managed through estimated acquisition cost (EAC) of drug ingredient costs through average acquisition cost (AAC) or through wholesale acquisition cost (WAC) when no AAC is assigned; and compliance with federal upper limits regulations, and the establishment of the dispensing fee, drug rebates, and copayments.

E. - H.

I. POS/PRO-DUR Requirements Provider Participation

1. - 5. …

6. Pharmacy providers and physicians may obtain assistance with clinical questions from the University of Louisiana at Monroe, School of Pharmacy.

I.7. - L. …

AUTHORITY NOTE: Promulgated in accordance with R.S, 46:153, Title XIX of the Social Security Act, and the 1995-96 General Appropriate Act.

HISTORICAL NOTE: Promulgated by the Department of Health and Hospitals, Office of the Secretary, Bureau of Health Services Financing, LR 32:1053 (June 2006), amended by the Department of Health and Hospitals, Bureau of Health Services Financing, LR 39:

Chapter 9. Methods of Payment

Subchapter A. General Provisions

§901. Definitions

Average Acquisition Cost (AAC)—the average of payments that pharmacists made to purchase a drug product, as determined through the collection and review of pharmacy invoices and other information deemed necessary by the Medicaid Program, and in accordance with applicable state and federal law.

Average Wholesale Price—Repealed.

* * *

Dispensing Fee—the fee paid by the Medicaid Program to reimburse for the professional services provided by a pharmacist when dispensing a prescription, including the provider fee assessed for each prescription filled in the state of Louisiana or shipped into the state of Louisiana per legislative mandate.

* * *

Single Source Drug—a drug mandated or sold by one manufacturer or labeler.

Usual and Customary Charge—a pharmacy's charge to the general public that reflects all advertised savings, discounts, special promotions, or other programs, including membership-based discounts initiated to reduce prices for product costs available to the general public, a special population, or an inclusive category of customers.

Wholesale Acquisition Cost (WAC)—the manufacturer's published catalog price for a drug product to wholesalers as reported to Medicaid by one or more national compendia on a weekly basis.

AUTHORITY NOTE: Promulgated in accordance with R.S. 36:254 and Title XIX of the Social Security Act.

HISTORICAL NOTE: Promulgated by the Department of Health and Hospitals, Office of the Secretary, Bureau of Health Services Financing, LR 32:1061 (June 2006), amended LR 34:87 (January 2008), amended by the Department of Health and Hospitals, Bureau of Health Services Financing, LR 36:1558 (July 2010), LR 39:

Subchapter B. Dispensing Fee

§915. General Provisions

A. The dispensing fee shall be set by the department and reviewed periodically for reasonableness and, when deemed appropriate by the Medicaid Program, may be adjusted considering such factors as fee studies or surveys.

Adjustment Factors. - Overhead Year. Repealed.

B. Provider participation in the Louisiana dispensing fee survey shall be mandatory. Failure to cooperate in the Louisiana dispensing fee survey by a provider shall result in removal from participation as a provider of pharmacy services in the Medicaid Program. Any provider removed from participation shall not be allowed to re-enroll until a dispensing fee survey document is properly completed and submitted to the bureau.

AUTHORITY NOTE: Promulgated in accordance with R.S. 46:153 and Title XIX of the Social Security Act.

HISTORICAL NOTE: Promulgated by the Department of Health and Hospitals, Bureau of Health Services Financing, LR 36:1558 (July 2010), amended LR 39:

§917. Maximum Allowable Overhead Cost Calculation

Repealed.

AUTHORITY NOTE: Promulgated in accordance with R.S. 46:153 and Title XIX of the Social Security Act.

HISTORICAL NOTE: Promulgated by the Department of Health and Hospitals, Bureau of Health Services Financing, LR 36:1559 (July 2010), repealed LR 39:

§919. Parameters and Limitations

Repealed.

AUTHORITY NOTE: Promulgated in accordance with R.S. 46:153 and Title XIX of the Social Security Act.

HISTORICAL NOTE: Promulgated by the Department of Health and Hospitals, Bureau of Health Services Financing, LR 36:1560 (July 2010), repealed LR 39:

§921. Interim Adjustment to Overhead Cost

Repealed.

AUTHORITY NOTE: Promulgated in accordance with R.S. 46:153 and Title XIX of the Social Security Act.

HISTORICAL NOTE: Promulgated by the Department of Health and Hospitals, Bureau of Health Services Financing, LR 36:1560 (July 2010), repealed LR 39:

§923. Cost Survey

Repealed.

AUTHORITY NOTE: Promulgated in accordance with R.S. 46:153 and Title XIX of the Social Security Act.

HISTORICAL NOTE: Promulgated by the Department of Health and Hospitals, Bureau of Health Services Financing, LR 36:1560 (July 2010), repealed LR 39:

§925. Dispensing Fee

Repealed.

AUTHORITY NOTE: Promulgated in accordance with R.S. 46:153 and Title XIX of the Social Security Act.

HISTORICAL NOTE: Promulgated by the Department of Health and Hospitals, Office of the Secretary, Bureau of Health Services Financing, LR 32:1064 (June 2006), amended LR 34:88 (January 2008), amended by the Department of Health and Hospitals, Bureau of Health Services Financing, LR 36:1561 (July 2010), repealed LR 39:

Subchapter C. Estimated Acquisition Cost

§935. Estimated Acquisition Cost Formula

A. *Estimated Acquisition Cost (EAC)*—the average acquisition cost of the drug dispensed adjusted by a multiplier of 1.1 for multiple source drugs and a multiplier of 1.01 for single-source drugs. If there is not an AAC available, the EAC is equal to the wholesale acquisition cost, as reported in the drug pricing compendia utilized by the department's fiscal intermediary. For department-defined specialty therapeutic classes, the EAC is the wholesale acquisition cost adjusted by a multiplier of 1.05.

B. - B.4.c. Repealed.

AUTHORITY NOTE: Promulgated in accordance with R.S. 36:254 and Title XIX of the Social Security Act.

HISTORICAL NOTE: Promulgated by the Department of Health and Hospitals, Office of the Secretary, Bureau of Health Services Financing, LR 32:1064 (June 2006), amended LR 34:88 (January 2008), amended by the Department of Health and Hospitals, Bureau of Health Services Financing, LR 36:1561 (July 2010), amended LR 39:

Subchapter D. Maximum Allowable Costs

§945. Reimbursement Methodology

A. Maximum Pharmaceutical Price Schedule

1. …
2. Repealed.

B. Payment will be made for medications in accordance with the payment procedures for any eligible person who has identified himself to the provider by presenting his identification card which shows his eligibility. The department advises participating pharmacists regarding payable medication.

C. - F. …

AUTHORITY NOTE: Promulgated in accordance with R.S. 36:254 and Title XIX of the Social Security Act.

HISTORICAL NOTE: Promulgated by the Department of Health and Hospitals, Office of the Secretary, Bureau of Health Services Financing, LR 32:1064 (June 2006), amended LR 34:88 (January 2008), amended by the Department of Health and Hospitals, Bureau of Health Services Financing, LR 36:1561 (July 2010), LR 39:

§949. Cost Limits

A. - A.3.c. …

B. The department shall make payments for single source drugs based on the lower of:

1. estimated acquisition cost (EAC) plus the dispensing fee; or
2. the provider's usual and customary charges to the general public not to exceed the department's "Maximum Pharmaceutical Price Schedule."

General Public—all other non-Medicaid prescriptions including:

i. third party insurance;
ii. pharmacy benefit management; or
iii. cash.

3. Repealed.

C. The department shall make payments for multiple source drugs other than drugs subject to physician certifications based on the lower of:

1. estimated acquisition cost plus the dispensing fee;
2. federal upper limits plus the dispensing fee; or
3. the provider's usual and customary charges to the general public not to exceed the department's "Maximum Pharmaceutical Price Schedule."

General Public—all other non-Medicaid prescriptions including:

i. third party insurance;
ii. pharmacy benefit management; or
iii. cash.

4. Repealed.

D. - E.2. …

AUTHORITY NOTE: Promulgated in accordance with R.S. 36:254 and Title XIX of the Social Security Act.

HISTORICAL NOTE: Promulgated by the Department of Health and Hospitals, Office of the Secretary, Bureau of Health Services Financing, LR 32:1065 (June 2006), amended LR 34:88 (January 2008), amended by the Department of Health and Hospitals, Bureau of Health Services Financing, LR 36:1561 (July 2010), LR 39:

Subchapter E. 340B Program

§961. Definitions

* * *

Estimated Acquisition Cost (EAC)—the average acquisition cost of the drug dispensed adjusted by a multiplier of 1.1 for multiple source drugs and a multiplier of 1.01 for single-source drugs. If there is not an AAC available, the *EAC* is equal to the wholesale acquisition cost, as reported in the drug pricing compendia utilized by the department's fiscal intermediary. For department-defined specialty therapeutic classes, the *EAC* is the wholesale acquisition cost adjusted by a multiplier of 1.05.

* * *

Wholesale Acquisition Cost (WAC)—the manufacturer's published catalog price for a drug product to wholesalers as reported to Medicaid by one or more national compendia on a weekly basis.

* * *

AUTHORITY NOTE: Promulgated in accordance with R.S. 36:254 and Title XIX of the Social Security Act.

HISTORICAL NOTE: Promulgated by the Department of Health and Hospitals, Office of the Secretary, Bureau of Health Services Financing, LR 32:1066 (June 2006), amended by the Department of Health and Hospitals, Bureau of Health Services Financing, LR 39:

§963. Reimbursement

A. - B. …

C. Dispensing Fees. The covered entity shall be paid a dispensing fee of $10.51 for each prescription dispensed to a Medicaid patient. With respect to contract pharmacy arrangements in which the contract pharmacy also serves as the covered entity's billing agent, the contract pharmacy shall be paid the $10.51 dispensing fee on behalf of the covered entity.

AUTHORITY NOTE: Promulgated in accordance with R.S. 36:254 and Title XIX of the Social Security Act.

HISTORICAL NOTE: Promulgated by the Department of Health and Hospitals, Office of the Secretary, Bureau of Health Services Financing, LR 32:1066 (June 2006), amended LR 34:88 (January 2008), amended by the Department of Health and Hospitals, Bureau of Health Services Financing, LR 36:1561 (July 2010), LR 39:

Subchapter F. Anti-hemophilia Drugs

§971. Reimbursement

A. Anti-hemophilia drugs purchased by a covered entity through the 340B Program and dispensed to Medicaid recipients shall be billed to Medicaid at actual 340B acquisition cost plus 10 percent and the dispensing fee unless the covered entity has implemented the Medicaid carve-out option. If the covered entity has implemented the Medicaid carve-out option, such drugs shall be reimbursed at EAC plus the dispensing fee or the billed charges, whichever is less.

B. Anti-hemophilia drugs purchased by a non-340B covered entity shall be reimbursed at EAC plus the dispensing fee.

AUTHORITY NOTE: Promulgated in accordance with R.S. 36:254 and Title XIX of the Social Security Act.

HISTORICAL NOTE: Promulgated by the Department of Health and Hospitals, Office of the Secretary, Bureau of Health Services Financing, LR 34:881 (May 2008), amended by the Department of Health and Hospitals, Bureau of Health Services Financing, LR 39:

Implementation of the provisions of this Rule may be contingent upon the approval of the U.S. Department of Health and Human Services, Centers for Medicare and Medicaid Services (CMS), if it is determined that submission to CMS for review and approval is required.

Interested persons may submit written comments to J. Ruth Kennedy, Bureau of Health Services Financing, P.O. Box 91030, Baton Rouge, LA 70821-9030. She is responsible for responding to all inquiries regarding this Emergency Rule. A copy of this Emergency Rule is available for review by interested parties at parish Medicaid offices.

Bruce D. Greenstein
Secretary

1302#085

DECLARATION OF EMERGENCY

Department of Health and Hospitals
Bureau of Health Services Financing

Professional Services Program
Anesthesia Services
Reimbursement Rate Reduction
(LAC 50:IX.15133 and 15135)

The Department of Health and Hospitals, Bureau of Health Services Financing amends LAC 50:IX.15133 and §15135 in the Medical Assistance Program as authorized by R.S. 36:254 and pursuant to Title XIX of the Social Security Act and as directed by House Bill 1 of the 2012 Regular Session of the Louisiana Legislature which states: "The secretary is directed to utilize various cost containment measures to ensure expenditures remain at the level appropriated in this Schedule, including but not limited to precertification, preadmission screening, diversion, fraud control, utilization review and management, prior authorization, service limitations, drug therapy management, disease management, cost sharing, and other measures as permitted under federal law." This Emergency Rule is promulgated in accordance with the provisions of the Administrative Procedure Act, R.S. 49:953(B)(1) et seq., and shall be in effect for the maximum period allowed under the Act or until adoption of the final Rule, whichever occurs first.

The Department of Health and Hospitals, Bureau of Health Services Financing amended the provisions governing anesthesia services in order to revise the formula-based reimbursement methodology for services rendered by physicians and certified registered nurse anesthetists (CRNAs), and to reorganize these provisions in a clear and concise manner in the *Louisiana Administrative Code* (*Louisiana Register*, Volume 36, Number 6).

As a result of a budgetary shortfall in state fiscal year 2013, the department promulgated an Emergency Rule which amended the provisions governing the reimbursement methodology for anesthesia services to reduce the reimbursement rates (*Louisiana Register*, Volume 38, Number 7). The department promulgated an Emergency Rule that amended the July 1, 2012 Emergency Rule to adjust the rate reduction and to include certified registered nurse anesthetists in the rate reduction (*Louisiana Register*, Volume 38, Number 8). This Emergency Rule is being promulgated to continue the provisions of the July 20, 2012 Emergency Rule. This action is being taken to avoid a budget deficit in the medical assistance programs.

Effective March 19, 2013, the Department of Health and Hospitals, Bureau of Health Services Financing amends the provisions governing the reimbursement methodology for anesthesia services.

Title 50
PUBLIC HEALTH—MEDICAL ASSISTANCE
Part IX. Professional Services Program
Subpart 15. Reimbursement

Chapter 151. Reimbursement Methodology

Subchapter D. Anesthesia Services

§15133. Formula-Based Reimbursement

A. - C.2. ...

D. Effective for dates of service on or after July 1, 2012, the reimbursement for formula-based anesthesia services shall be reduced by 3.7 percent of the rates in effect on June 30, 2012.

E. Effective for dates of service on or after July 20, 2012, the 3.7 percent reimbursement rate reduction for formula-based anesthesia services shall be adjusted to 3.4 percent of the rates in effect on June 30, 2012.

F. Effective for dates of service on or after July 20, 2012, the reimbursement for formula-based anesthesia services rendered by a CRNA shall be reduced by 3.4 percent of the rates in effect on July 19, 2012.

AUTHORITY NOTE: Promulgated in accordance with R.S. 36:254 and Title XIX of the Social Security Act.

HISTORICAL NOTE: Promulgated by the Department of Health and Hospitals, Bureau of Health Services Financing, LR 36:1251 (June 2010), amended LR 36:2282 (October 2010), LR 39:

§15135. Flat Fee Reimbursement

A. - D.1. ...

E. Effective for dates of service on or after July 1, 2012, the flat fee reimbursement rates paid for anesthesia services shall be reduced by 3.7 percent of the rates in effect on June 30, 2012.

F. Effective for dates of service on or after July 20, 2012, the 3.7 percent rate reduction for flat fee reimbursement of anesthesia services shall be adjusted to 3.4 percent of the rates in effect on June 30, 2012.

G. Effective for dates of service on or after July 20, 2012, the flat fee reimbursement for anesthesia services rendered by a CRNA shall be reduced by 3.4 percent of the rates in effect on July 19, 2012.

AUTHORITY NOTE: Promulgated in accordance with R.S. 36:254 and Title XIX of the Social Security Act.

HISTORICAL NOTE: Promulgated by the Department of Health and Hospitals, Bureau of Health Services Financing, LR 36:1251 (June 2010), amended LR 39:

Implementation of the provisions of this Rule may be contingent upon the approval of the U.S. Department of Health and Human Services, Centers for Medicare and Medicaid Services (CMS), if it is determined that submission to CMS for review and approval is required.

Interested persons may submit written comments to J. Ruth Kennedy, Bureau of Health Services Financing, P.O. Box 91030, Baton Rouge, LA 70821-9030. She is responsible for responding to inquiries regarding this Emergency Rule. A copy of this Emergency Rule is available for review by interested parties at parish Medicaid offices.

Bruce D. Greenstein
Secretary

1302#086

DECLARATION OF EMERGENCY

Department of Health and Hospitals
Bureau of Health Services Financing

Professional Services Program—Family Planning Services
Reimbursement Rate Reduction (LAC 50:IX.15143)

The Department of Health and Hospitals, Bureau of Health Services Financing amends LAC 50:IX.15143 in the Medical Assistance Program as authorized by R.S. 36:254 and pursuant to Title XIX of the Social Security Act and as directed by House Bill 1 of the 2012 Regular Session of the Louisiana Legislature which states: "The secretary is directed to utilize various cost containment measures to ensure expenditures remain at the level appropriated in this Schedule, including but not limited to precertification, preadmission screening, diversion, fraud control, utilization review and management, prior authorization, service limitations, drug therapy management, disease management, cost sharing, and other measures as permitted under federal law." This Emergency Rule is promulgated in accordance with the provisions of the Administrative Procedure Act, R.S. 49:953(B)(1) et seq., and shall be in effect for the maximum period allowed under the Act or until adoption of the final Rule, whichever occurs first.

As a result of a budgetary shortfall in state fiscal year 2010, the Department of Health and Hospitals, Bureau of Health Services Financing amended the provisions governing the Professional Services Program to reduce the reimbursement rates for family planning services and to promulgate these provisions in a codified format for inclusion in the *Louisiana Administrative Code* (*Louisiana Register*, Volume 36, Number 11).

Due to a budgetary shortfall in state fiscal year 2013, the department promulgated an Emergency Rule which amended the provisions governing the reimbursement methodology for family planning services to reduce the reimbursement rates (*Louisiana Register*, Volume 38, Number 7). The department has now determined that it is necessary to amend the July 1, 2012 Emergency Rule in order to adjust the rate reduction. This action is being taken to avoid a budget deficit in the medical assistance programs.

Effective February 20, 2013, the Department of Health and Hospitals, Bureau of Health Services Financing amends the provisions of the July 1, 2012 Emergency Rule governing the Professional Services Program which reduced the reimbursement rates paid for family planning services.

Title 50
PUBLIC HEALTH—MEDICAL ASSISTANCE
Part IX. Professional Services Program
Subpart 15. Reimbursement
Chapter 151. Reimbursement Methodology
Subchapter E. Family Planning Services
§15143. Reimbursement

A. - C. ...

D. Effective for dates of service on or after July 1, 2012, the reimbursement rates for family planning services rendered by a physician shall be reduced by 3.7 percent of the rates in effect on June 30, 2012.

1. Effective for dates of service on or after February 20, 2013, the 3.7 percent reimbursement rate reduction for family planning services rendered by a physician shall be adjusted to 3.4 percent of the rates in effect on June 30, 2012.

E. - E.3.a. …

AUTHORITY NOTE: Promulgated in accordance with R.S. 36:254 and Title XIX of the Social Security Act.

HISTORICAL NOTE: Promulgated by the Department of Health and Hospitals, Bureau of Health Services Financing, LR 36:2566 (November 2010), amended by the Department of Health and Hospitals, Bureau of Health Services Financing and the Office of Public Health, LR 39:96 (January 2013), amended by the Department of Health and Hospitals, Bureau of Health Services Financing, LR 39:

Implementation of the provisions of this Rule may be contingent upon the approval of the U.S. Department of Health and Human Services, Centers for Medicare and Medicaid Services (CMS), if it is determined that submission to CMS for review and approval is required.

Interested persons may submit written comments to J. Ruth Kennedy, Bureau of Health Services Financing, P.O. Box 91030, Baton Rouge, LA 70821-9030. She is responsible for responding to inquiries regarding this Emergency Rule. A copy of this Emergency Rule is available for review by interested parties at parish Medicaid offices.

Bruce D. Greenstein
Secretary

1302#052

DECLARATION OF EMERGENCY

Department of Health and Hospitals
Bureau of Health Services Financing

Professional Services Program—Immunizations
Reimbursement Methodology (LAC 50:IX.8305 and 8505)

The Department of Health and Hospitals, Bureau of Health Services Financing amends LAC 50:IX.8305 and §8505 in the Medical Assistance Program as authorized by R.S. 36:254 and pursuant to Title XIX of the Social Security Act. This Emergency Rule is promulgated in accordance with the provisions of the Administrative Procedure Act, R.S. 49:953(B)(1) et seq., and shall be in effect for the maximum period allowed under the Act or until adoption of the final Rule, whichever occurs first.

The Department of Health and Hospitals, Bureau of Health Services Financing and the Office of Public Health (OPH) adopted provisions to establish Medicaid payment of uncompensated care costs for the administration of vaccines rendered by OPH to Medicaid eligible recipients (*Louisiana Register*, Volume 39, Number 1).

The Patient Protection and Affordable Care Act (PPACA) requires states to reimburse certain primary care services, including the administration of specified immunizations (if they were covered), at an increased rate. In compliance with PPACA and federal regulations, the department promulgated an Emergency Rule which amended the provisions governing the reimbursement methodology for Medicaid payments to providers for the administration of certain vaccines to children to increase the reimbursement rates (*Louisiana Register*, Volume 39, Number 1). The provisions governing an increase in rates for the administration of certain vaccines to adults were inadvertently omitted from the January 1, 2013 Emergency Rule. Therefore, the department now proposes to amend the January 1, 2013 Emergency Rule in order to incorporate provisions governing an increase in rates for the administration of certain vaccines to adults and to revise the payment methodology.

This action is being taken to avoid federal sanctions and to secure enhanced federal funding. It is anticipated that this amendment will increase expenditures in the Medicaid Program by an additional $25,053 for state fiscal year 2012-2013. The total increase in expenditures in the Medicaid Program for the administration of children's and adult immunizations is $36,160 for state fiscal year 2012-2013.

Effective February 20, 2013, the Department of Health and Hospitals, Bureau of Health Services Financing amends the provisions of the January 1, 2013 Emergency Rule governing the reimbursement methodology for the administration of immunizations.

Title 50
PUBLIC HEALTH—MEDICAL ASSISTANCE
Part IX. Professional Services Program
Subpart 7. Immunizations
Chapter 83. Children's Immunizations
§8305. Reimbursement Methodology

A. - C.3.a. ...

D. Effective for dates of service on or after January 1, 2013-December 31, 2014, certain vaccine administration services shall be reimbursed at payment rates consistent with the methodologies that apply to such services and physicians under Part B of Title XVIII of the Social Security Act (Medicare) and the Vaccines for Children (VFC) Program.

1. The following vaccine service codes, when covered by the Medicaid Program and provided under the VFC Program, shall be reimbursed at an increased rate:

a. 90471, 90472, 90473 and 90474; or

b. their successor codes as specified by the U.S. Department of Health and Human Services.

2. Qualifying Criteria. Reimbursement shall be limited to specified services furnished by a physician, either a doctor of osteopathy or a medical doctor or under the personal supervision of a physician, who attests to a specialty or subspecialty designation in family medicine, general internal medicine or pediatrics, and also attests to meeting one or more of the following criteria:

a. certification as a specialist or subspecialist within family medicine, general internal medicine or pediatric medicine by the American Board of Medical Specialists (ABMS), the American Board of Physician Specialties (ABPS), or the American Osteopathic Association (AOA); or

b. specified evaluation and management and vaccine services that equal at least 60 percent of total Medicaid codes paid during the most recently completed calendar year, or for newly eligible physicians the prior month.

3. Payment Methodology. For vaccine administration services provided under the Vaccines for Children Program in calendar years 2013 and 2014, the reimbursement shall be the lesser of the:

a. regional maximum administration fee; or

b. Medicare fee schedule rate in calendar years 2013 or 2014 that reflects the mean value over all parishes (counties) of the rate for each of the specified code(s) or, if greater, the payment rates that would be applicable in those years using the calendar year 2009 Medicare physician fee schedule conversion factor multiplied by the calendar year 2013 and 2014 relative value units in accordance with 42 CFR 447.405 as approved by the Centers for Medicare and Medicaid Services.

4. The department shall make a payment to the provider for the difference between the Medicaid rate and the increased rate, if any.

AUTHORITY NOTE: Promulgated in accordance with R.S. 36:254 and Title XIX of the Social Security Act.

HISTORICAL NOTE: Promulgated by the Department of Health and Hospitals, Office of the Secretary, Bureau of Health Services Financing, LR 35:71 (January 2009), amended by the Department of Health and Hospitals, Bureau of Health Services Financing and the Office of Public Health, LR 39:96 (January 2013), amended by the Department of Health and Hospitals, Bureau of Health Services Financing, LR 39:

Chapter 85. Adult Immunizations
§8505. Reimbursement Methodology

A. - B.3.a. …

C. Effective for dates of service on or after January 1, 2013-December 31, 2014, certain vaccine administration services shall be reimbursed at payment rates consistent with the methodology that applies to such services and physicians under Part B of Title XVIII of the Social Security Act (Medicare).

1. The following vaccine service codes, when covered by the Medicaid Program, shall be reimbursed at an increased rate:

a. 90471, 90472, 90473 and 90474; or

b. their successor codes as specified by the U.S. Department of Health and Human Services.

2. Qualifying Criteria. Reimbursement shall be limited to specified services furnished by a physician, either a doctor of osteopathy or a medical doctor or under the personal supervision of a physician, who attests to a specialty or subspecialty designation in family medicine, general internal medicine or pediatrics, and also attests to meeting one or more of the following criteria:

a. certification as a specialist or subspecialist within family medicine, general internal medicine or pediatric medicine by the American Board of Medical Specialists (ABMS), the American Board of Physician Specialties (ABPS), or the American Osteopathic Association (AOA); or

b. specified evaluation and management and vaccine services that equal at least 60 percent of total Medicaid codes paid during the most recently completed calendar year, or for newly eligible physicians the prior month.

3. Payment Methodology. For vaccine administration services provided in calendar years 2013 and 2014, the reimbursement shall be the lesser of the:

a. Medicare fee schedule rate in calendar years 2013 or 2014 that reflects the mean value over all parishes (counties) of the rate for each of the specified code(s) or, if greater, the payment rates that would be applicable in those years using the calendar year 2009 Medicare physician fee schedule conversion factor multiplied by the calendar year 2013 and 2014 relative value units in accordance with 42 CFR 447.405 as approved by the Centers for Medicare and Medicaid Services; or

b. provider's actual billed charges for the service.

4. The department shall make a payment to the provider for the difference between the Medicaid rate and the increased rate, if any.

AUTHORITY NOTE: Promulgated in accordance with R.S. 36:254 and Title XIX of the Social Security Act.

HISTORICAL NOTE: Promulgated by the Department of Health and Hospitals, Bureau of Health Services Financing and the Office of Public Health, LR 39:97 (January 2013), amended by the Department of Health and Hospitals, Bureau of Health Services Financing, LR 39:

Implementation of the provisions of this Rule may be contingent upon the approval of the U.S. Department of Health and Human Services, Centers for Medicare and Medicaid Services (CMS), if it is determined that submission to CMS for review and approval is required.

Interested persons may submit written comments to J. Ruth Kennedy, Bureau of Health Services Financing, P.O. Box 91030, Baton Rouge, LA 70821-9030. She is responsible for responding to all inquiries regarding this Emergency Rule. A copy of this Emergency Rule is available for review by interested parties at parish Medicaid offices.

Bruce D. Greenstein
Secretary

1302#053

DECLARATION OF EMERGENCY

Department of Health and Hospitals
Bureau of Health Services Financing

Professional Services Program—Physicians Services Reimbursement Methodology (LAC 50:IX.15113)

The Department of Health and Hospitals, Bureau of Health Services Financing amends LAC 50:IX.15113 in the Medical Assistance Program as authorized by R.S. 36:254 and pursuant to Title XIX of the Social Security Act. This Emergency Rule is promulgated in accordance with the provisions of the Administrative Procedure Act, R.S. 49:953(B)(1) et seq., and shall be in effect for the maximum period allowed under the Act or until adoption of the final Rule, whichever occurs first.

The Department of Health and Hospitals, Bureau of Health Services Financing amended the provisions governing the reimbursement methodology for physician services to increase the reimbursement rates for obstetric delivery services (*Louisiana Register*, Volume 37, Number 3).

As a result of a budgetary shortfall in state fiscal year 2013, the department promulgated an Emergency Rule which amended the provisions governing the reimbursement methodology for physician services to reduce the reimbursement rates and discontinue reimbursement for certain procedures (*Louisiana Register*, Volume 38, Number 7). The department subsequently amended the provisions of the July 1, 2012 Emergency Rule in order to revise the formatting to ensure that these provisions are promulgated in a clear and concise manner (*Louisiana Register*, Volume 38, Number 10).

The Patient Protection and Affordable Care Act (PPACA) requires states to reimburse certain primary care services at an increased rate. In compliance with PPACA and federal regulations, the department promulgated an Emergency Rule which amended the provisions governing the reimbursement methodology for physician services in order to increase the reimbursement rates (*Louisiana Register,* Volume 39, Number 1).

The department now proposes to amend the provisions of the January 1, 2013 Emergency Rule in order to revise the payment methodology and to correct the formatting of these provisions as a result of the promulgation of the October 20, 2012 Emergency Rule governing the reimbursement methodology for physician services. This action is being taken to avoid federal sanctions and to secure enhanced federal funding.

Effective February 20, 2013, the Department of Health and Hospitals, Bureau of Health Services Financing amends the provisions of the January 1, 2013 Emergency Rule governing the reimbursement methodology for physician services covered in the Professional Services Program.

Title 50
PUBLIC HEALTH—MEDICAL ASSISTANCE
Part IX. Professional Services Program
Subpart 15. Reimbursement
Chapter 151. Reimbursement Methodology
Subchapter B. Physician Services
§15113. Reimbursement Methodology

A. - I.3. …

J. Effective for dates of service on or after January 1, 2013-December 31, 2014, certain physician services shall be reimbursed at payment rates consistent with the methodology that applies to such services and physicians under Part B of Title XVIII of the Social Security Act (Medicare).

1. The following physician service codes, when covered by the Medicaid Program, shall be reimbursed at an increased rate:

a. evaluation and management codes 99201-99499; or

b. their successor codes as specified by the U.S. Department of Health and Human Services.

2. Qualifying Criteria. Reimbursement shall be limited to specified services furnished by or under the personal supervision of a physician, either a doctor of osteopathy or a medical doctor, who attests to a specialty or subspecialty designation in family medicine, general internal medicine or pediatrics, and who also attests to meeting one or more of the following criteria:

a. certification as a specialist or subspecialist in family medicine, general internal medicine or pediatric medicine by the American Board of Medical Specialists (ABMS), the American Board of Physician Specialties (ABPS), or the American Osteopathic Association (AOA); or

b. specified evaluation and management and vaccine services that equal at least 60 percent of total Medicaid codes paid during the most recently completed calendar year, or for newly eligible physicians the prior month.

3. Payment Methodology. For primary care services provided in calendar years 2013 and 2014, the reimbursement shall be the lesser of the:

a. Medicare Part B fee schedule rate in calendar years 2013 or 2014 that is applicable to the place of service and reflects the mean value over all parishes (counties) of the rate for each of the specified codes or, if greater, the payment rates that would be applicable in those years using the calendar year 2009 Medicare physician fee schedule conversion factor multiplied by the calendar year 2013 and 2014 relative value units in accordance with 42 CFR 447.405. If there is no applicable rate established by Medicare, the reimbursement shall be the rate specified in a fee schedule established and announced by the Centers for Medicare and Medicaid Services (CMS); or

b. provider's actual billed charge for the service.

4. The department shall make payment to the provider for the difference between the Medicaid rate and the increased rate, if any.

K. Reserved.

AUTHORITY NOTE: Promulgated in accordance with R.S. 36:254 and Title XIX of the Social Security Act.

HISTORICAL NOTE: Promulgated by the Department of Health and Hospitals, Bureau of Health Services Financing, LR 36:1252 (June 2010), amended LR 36:2282 (October 2010), LR 37:904 (March 2011), LR 39:

Implementation of the provisions of this Rule may be contingent upon the approval of the U.S. Department of Health and Human Services, Centers for Medicare and Medicaid Services (CMS), if it is determined that submission to CMS for review and approval is required.

Interested persons may submit written comments to J. Ruth Kennedy, Bureau of Health Services Financing, P.O. Box 91030, Baton Rouge, LA 70821-9030. She is responsible for responding to all inquiries regarding this Emergency Rule. A copy of this Emergency Rule is available for review by interested parties at parish Medicaid offices.

Bruce D. Greenstein
Secretary

1302#054

DECLARATION OF EMERGENCY

Department of Health and Hospitals
Bureau of Health Services Financing

Professional Services Program
Reimbursement Methodology
Supplemental Payments
(LAC 50:IX.15151 and 15153)

The Department of Health and Hospitals, Bureau of Health Services Financing adopts §15151 and §15153 in the Medical Assistance Program as authorized by R.S. 36:254 and pursuant to Title XIX of the Social Security Act. This Emergency Rule is promulgated in accordance with the provisions of the Administrative Procedure Act, R.S. 49:953(B)(1) et seq., and shall be in effect for the maximum period allowed under the Act or until adoption of the final Rule, whichever occurs first.

The Department of Health and Hospitals, Office of the Secretary, Bureau of Health Services Financing adopted provisions in the Professional Services Program to provide supplemental payments to physicians and other eligible professional service practitioners employed by state-owned or operated entities (*Louisiana Register*, Volume 32, Number 6).

The department promulgated an Emergency Rule which amended the provisions governing the reimbursement methodology for professional services to provide a supplemental payment to physicians and other professional practitioners employed by, or under contract with, non-state owned or operated governmental entities (*Louisiana Register*, Volume 36, Number 6). In addition, this Emergency Rule also repromulgated the provisions of the June 20, 2006 Rule in a codified format for inclusion in the *Louisiana Administrative Code.*

The department has now determined that the Emergency Rule to redeclare these provisions was inadvertently omitted from the October 2012 submission to the Office of State Register for publication in the *Louisiana Register*. Therefore, this Emergency Rule is being promulgated to assure compliance with the technical requirements of R.S. 49:953, and to re-instate the provisions of the July 1, 2010 Emergency Rule governing the Professional Services Program and supplemental payments for physicians and

other professional practitioners employed by, or under contract with, non-state owned or operated governmental entities. The Centers for Medicare and Medicaid Services (CMS) has already approved the corresponding amendment to the Medicaid State Plan which governs these supplemental payments. This action is being taken to promote the health and welfare of Medicaid recipients by encouraging continued provider participation in the Medicaid Program to ensure recipient access to services. It is estimated that implementation of this Emergency Rule will have no programmatic fiscal impact to the state in fiscal year 2012-2013.

Effective February 20, 2013, the Department of Health and Hospitals, Bureau of Health Services Financing amends the provisions governing the reimbursement methodology for services rendered by physicians and other professional service practitioners.

Title 50

PUBLIC HEALTH—MEDICAL ASSISTANCE

Part IX. Professional Services Program

Subpart 15. Reimbursement

Chapter 151. Reimbursement Methodology

Subchapter F. Supplemental Payments

§15151. Qualifying Criteria—State Owned or Operated Professional Services Practices

A. In order to qualify to receive supplemental payments, physicians and other eligible professional service practitioners must be:

1. licensed by the state of Louisiana;
2. enrolled as a Louisiana Medicaid provider; and
3. employed by a state-owned or operated entity, such as a state-operated hospital or other state entity, including a state academic health system, which:
   a. has been designated by the bureau as an essential provider; and
   b. has furnished satisfactory data to DHH regarding the commercial insurance payments made to its employed physicians and other professional service practitioners.

B. The supplemental payment to each qualifying physician or other eligible professional services practitioner in the practice plan will equal the difference between the Medicaid payments otherwise made to these qualifying providers for professional services and the average amount that would have been paid at the equivalent community rate. The community rate is defined as the average amount that would have been paid by commercial insurers for the same services.

C. The supplemental payments shall be calculated by applying a conversion factor to actual charges for claims paid during a quarter for Medicaid services provided by the state-owned or operated practice plan providers. The commercial payments and respective charges shall be obtained for the state fiscal year preceding the reimbursement year. If this data is not provided satisfactorily to DHH, the default conversion factor shall equal "1." This conversion factor shall be established annually for qualifying physicians/practitioners by:

1. determining the amount that private commercial insurance companies paid for commercial claims submitted by the state-owned or operated practice plan or entity; and
2. dividing that amount by the respective charges for these payers.

D. The actual charges for paid Medicaid services shall be multiplied by the conversion factor to determine the maximum allowable Medicaid reimbursement. For eligible non-physician practitioners, the maximum allowable Medicaid reimbursement shall be limited to 80 percent of this amount.

E. The actual base Medicaid payments to the qualifying physicians/practitioners employed by a state-owned or operated entity shall then be subtracted from the maximum Medicaid reimbursable amount to determine the supplemental payment amount.

F. The supplemental payment for services provided by the qualifying state-owned or operated physician practice plan will be implemented through a quarterly supplemental payment to providers, based on specific Medicaid paid claim data.

AUTHORITY NOTE: Promulgated in accordance with R.S. 36:254 and Title XIX of the Social Security Act.

HISTORICAL NOTE: Promulgated by the Department of Health and Hospitals, Bureau of Health Services Financing, LR 39:

§15153. Qualifying Criteria—Non-State Owned or Operated Professional Services Practices

A. Effective for dates of service on or after February 20, 2013, physicians and other professional service practitioners who are employed by, or under contract with, a non-state owned or operated governmental entity, such as a non-state owned or operated public hospital, may qualify for supplemental payments for services rendered to Medicaid recipients. To qualify for the supplemental payment, the physician or professional service practitioner must be:

1. licensed by the state of Louisiana; and
2. enrolled as a Louisiana Medicaid provider.

B. The supplemental payment will be determined in a manner to bring payments for these services up to the community rate level.

1. For purposes of these provisions, the community rate shall be defined as the rates paid by commercial payers for the same service.

C. The non-state governmental entity shall periodically furnish satisfactory data for calculating the community rate as requested by DHH.

D. The supplemental payment amount shall be determined by establishing a Medicare to community rate conversion factor for the physician or physician practice plan. At the end of each quarter, for each Medicaid claim paid during the quarter, a Medicare payment amount will be calculated and the Medicare to community rate conversion factor will be applied to the result. Medicaid payments made for the claims paid during the quarter will then be subtracted from this amount to establish the supplemental payment amount for that quarter.

E. The supplemental payments shall be made on a quarterly basis and the Medicare to community rate conversion factor shall be recalculated periodically as determined by the department.

AUTHORITY NOTE: Promulgated in accordance with R.S. 36:254 and Title XIX of the Social Security Act.

HISTORICAL NOTE: Promulgated by the Department of Health and Hospitals, Bureau of Health Services Financing, LR 39:

Interested persons may submit written comments to J. Ruth Kennedy, Bureau of Health Services Financing, P.O. Box 91030, Baton Rouge, LA 70821-9030. She is

responsible for responding to inquiries regarding this Emergency Rule. A copy of this Emergency Rule is available for review by interested parties at parish Medicaid offices.

Bruce D. Greenstein
Secretary

1302#055

DECLARATION OF EMERGENCY

Department of Health and Hospitals
Bureau of Health Services Financing

Prosthetics and Orthotics
Reimbursement Rate Reduction
(LAC 50:XVII.501)

The Department of Health and Hospitals, Bureau of Health Services Financing amends LAC 50:XVII.501 in the Medical Assistance Program as authorized by R.S. 36:254 and pursuant to Title XIX of the Social Security Act and as directed by House Bill 1 of the 2012 Regular Session of the Louisiana Legislature which states: "The secretary is directed to utilize various cost containment measures to ensure expenditures remain at the level appropriated in this Schedule, including but not limited to precertification, preadmission screening, diversion, fraud control, utilization review and management, prior authorization, service limitations, drug therapy management, disease management, cost sharing, and other measures as permitted under federal law." This Emergency Rule is promulgated in accordance with the provisions of the Administrative Procedure Act, R.S. 49:953(B)(1) et seq., and shall be in effect for the maximum period allowed under the Act or until adoption of the final Rule, whichever occurs first.

As a result of a budgetary shortfall in state fiscal year 2010, the Department of Health and Hospitals, Bureau of Health Services Financing amended the provisions governing the reimbursement methodology for prosthetics and orthotics to reduce the reimbursement rates (*Louisiana Register*, Volume 36, Number 11).

As a result of a budgetary shortfall in state fiscal year 2013, the department promulgated an Emergency Rule which amended the provisions governing the reimbursement methodology for prosthetics and orthotics to reduce the reimbursement rates (*Louisiana Register*, Volume 38, Number 7). This Emergency Rule is being promulgated to continue the provisions of the July 1, 2012 Emergency Rule. This action is being taken to avoid a budget deficit in the medical assistance programs.

Effective February 28, 2013, the Department of Health and Hospitals, Bureau of Health Services Financing amends the provisions governing the reimbursement methodology for prosthetics and orthotics to reduce reimbursement rates.

Title 50
PUBLIC HEALTH—MEDICAL ASSISTANCE
Part XVII. Prosthetics and Orthotics
Subpart 1. General Provisions
Chapter 5. Reimbursement
§501. Reimbursement Methodology

A. - F.1. …

G. Effective for dates of service on or after July 1, 2012, the reimbursement for prosthetic and orthotic devices shall be reduced by 3.7 percent of the fee amounts on file as of June 30, 2012.

1. The rate reduction shall not apply to items that do not appear on the fee schedule and are individually priced.

AUTHORITY NOTE: Promulgated in accordance with R. S. 36:254 and Title XIX of the Social Security Act.

HISTORICAL NOTE: Promulgated by the Department of Health and Hospitals, Office of the Secretary, Bureau of Health Services Financing, LR 31:1597 (July 2005), amended LR 34:881 (May 2008), amended by the Department of Health and Hospitals, Bureau of Health Services Financing, LR 35:1903 (September 2009), repromulgated LR 36:521 (March 2010), amended LR 36:1253 (June 2010), amended LR 36:2567 (November 2010), LR 39:

Implementation of the provisions of this Rule may be contingent upon the approval of the U.S. Department of Health and Human Services, Centers for Medicare and Medicaid Services (CMS), if it is determined that submission to CMS for review and approval is required.

Interested persons may submit written comments to J. Ruth Kennedy, Bureau of Health Services Financing, P.O. Box 91030, Baton Rouge, LA 70821-9030. She is responsible for responding to inquiries regarding this Emergency Rule. A copy of this Emergency Rule is available for review by interested parties at parish Medicaid offices.

Bruce D. Greenstein
Secretary

1302#087

DECLARATION OF EMERGENCY

Department of Health and Hospitals
Bureau of Health Services Financing
and
Office of Beharioral Health

Substance Abuse Services
Reimbursement Rate Reduction
(LAC 50:XXXIII.14701)

The Department of Health and Hospitals, Bureau of Health Services Financing and the Office of Behavioral Health amend LAC 50:XXXIII.14701 in the Medical Assistance Program as authorized by R.S. 36:254 and pursuant to Title XIX of the Social Security Act and as directed by House Bill 1 of the 2012 Regular Session of the Louisiana Legislature which states: "The secretary is directed to utilize various cost containment measures to ensure expenditures remain at the level appropriated in this Schedule, including but not limited to precertification, preadmission screening, diversion, fraud control, utilization review and management, prior authorization, service limitations, drug therapy management, disease management, cost sharing, and other measures as permitted under federal law." This Emergency Rule is promulgated in accordance with the provisions of the Administrative Procedure Act, R.S. 49:953(B)(1) et seq., and shall be in effect for the maximum period allowed under the Act or until adoption of the final Rule, whichever occurs first.

The Department of Health and Hospitals, Bureau of Health Services Financing adopted provisions to implement a coordinated behavioral health services system under the Medicaid Program which provides coverage of substance

abuse services for children and adults (*Louisiana Register*, Volume 38, Number 2).

As a result of a budgetary shortfall in state fiscal year 2013, the department promulgated an Emergency Rule which amended the provisions governing the reimbursement methodology for substance abuse services to reduce the reimbursement rates for outpatient substance abuse services provided to children/adolescents (*Louisiana Register*, Volume 38, Number 7). This Emergency Rule is being promulgated to continue the provisions of the July 1, 2012 Emergency Rule. This action is being taken to avoid a budget deficit in the medical assistance programs.

Effective February 28, 2013, the Department of Health and Hospitals, Bureau of Health Services Financing and the Office of Behavioral Health amend the provisions governing the reimbursement methodology for substance abuse services to reduce the reimbursement rates.

Title 50

PUBLIC HEALTH—MEDICAL ASSISTANCE

Part XXXIII. Behavioral Health Services

Subpart 15. Substance Abuse Services

Chapter 147. Reimbursement

§14701. Reimbursement Methodology

A. ...

B. Effective for dates of service on or after July 1, 2012, the reimbursement rates for outpatient substance abuse services provided to children/adolescents shall be reduced by 1.44 percent of the rates in effect on June 30, 2012.

AUTHORITY NOTE: Promulgated in accordance with R.S. 36:254 and Title XIX of the Social Security Act.

HISTORICAL NOTE: Promulgated by the Department of Health and Hospitals, Bureau of Health Services Financing and the Office of Behavioral Health, LR 38:427 (February 2012), amended LR 39:

Implementation of the provisions of this Rule may be contingent upon the approval of the U.S. Department of Health and Human Services, Centers for Medicare and Medicaid Services (CMS), if it is determined that submission to CMS for review and approval is required.

Interested persons may submit written comments to J. Ruth Kennedy, Bureau of Health Services Financing, P.O. Box 91030, Baton Rouge, LA 70821-9030. She is responsible for responding to inquiries regarding this Emergency Rule. A copy of this Emergency Rule is available for review by interested parties at parish Medicaid offices.

Bruce D. Greenstein
Secretary

1302#088

DECLARATION OF EMERGENCY

Department of Health and Hospitals
Bureau of Health Services Financing

Targeted Case Management
Reimbursement Rate Reduction
(LAC 50:XV.10701)

The Department of Health and Hospitals, Bureau of Health Services Financing amends LAC 50:XV.10701 in the Medical Assistance Program as authorized by R.S. 36:254 and pursuant to Title XIX of the Social Security Act and as directed by House Bill 1 of the 2012 Regular Session of the Louisiana Legislature which states: "The secretary is directed to utilize various cost containment measures to ensure expenditures remain at the level appropriated in this Schedule, including but not limited to precertification, preadmission screening, diversion, fraud control, utilization review and management, prior authorization, service limitations, drug therapy management, disease management, cost sharing, and other measures as permitted under federal law." This Emergency Rule is promulgated in accordance with the provisions of the Administrative Procedure Act, R.S. 49:953(B)(1) et seq., and shall be in effect for the maximum period allowed under the Act.

The Department of Health and Hospitals, Bureau of Health Services Financing and the Office of Public Health (OPH) adopted provisions to establish Medicaid payment of uncompensated care costs for targeted case management (TCM) services rendered by OPH to Medicaid eligible recipients (*Louisiana Register*, Volume 39, Number 1). As a result of a budgetary shortfall in state fiscal year 2013, the Department of Health and Hospitals, Bureau of Health Services Financing promulgated an Emergency Rule which amended the provisions governing the reimbursement methodology for TCM services to reduce the reimbursement rates (*Louisiana Register*, Volume 38, Number 7). Due to a continuing budgetary shortfall in state fiscal year 2013, the department promulgated Emergency Rules which amended the provisions governing targeted case management in order to terminate the services rendered in the Nurse Family Partnership Program and TCM services rendered to HIV disabled individuals (*Louisiana* Register, Volume 39, Number 1).

The department now proposes to amend the provisions of the July 1, 2012 Emergency Rule in order to revise these provisions as a result of the TCM service terminations. This action is being taken to avoid a budget deficit in the medical assistance programs.

Effective February 20, 2013, the Department of Health and Hospitals, Bureau of Health Services Financing amends the July 1, 2012 Emergency Rule governing the reimbursement methodology for targeted case management services.

Title 50

PUBLIC HEALTH—MEDICAL ASSISTANCE

Part XV. Services for Special Populations

Subpart7. Targeted Case Management

Chapter 107. Reimbursement

§10701. Reimbursement

A. - F.1. …

G. Effective for dates of service on or after July 1, 2012, the reimbursement for case management services provided to the following targeted populations shall be reduced by 1.5 percent of the rates on file as of June 30, 2012:

1. participants in the Early and Periodic Screening, Diagnosis, and Treatment Program; and

2. individuals with developmental disabilities who participate in the New Opportunities Waiver.

3. - 4. Repealed.

H. - H.3.a. …

I. - J. Reserved.

AUTHORITY NOTE: Promulgated in accordance with R.S. 36:254 and Title XIX of the Social Security Act.

HISTORICAL NOTE: Promulgated by the Department of Health and Hospitals, Office of the Secretary, Bureau of Health Services Financing, LR 30:1040 (May 2004), amended LR 31:2032 (August 2005), amended LR 35:73 (January 2009), amended by the Department of Health and Hospitals, Bureau of Health Services Financing, LR 35:1903 (September 2009), amended LR 36:1783 (August 2010), amended by the Department of Health and Hospitals, Bureau of Health Services Financing and the Office of Public Health, LR 39:97 (January 2013), amended by the Department of Health and Hospitals, Bureau of Health Services Financing, LR 39:

Implementation of the provisions of this Rule may be contingent upon the approval of the U.S. Department of Health and Human Services, Centers for Medicare and Medicaid Services (CMS), if it is determined that submission to CMS for review and approval is required.

Interested persons may submit written comments to J. Ruth Kennedy, Bureau of Health Services Financing, P.O. Box 91030, Baton Rouge, LA 70821-9030. She is responsible for responding to inquiries regarding this Emergency Rule. A copy of this Emergency Rule is available for review by interested parties at parish Medicaid offices.

Bruce D. Greenstein
Secretary

1302#056

DECLARATION OF EMERGENCY

Department of Health and Hospitals
Licensed Professional Counselors Board of Examiners

Practice of Mental Health Counseling for
Serious Mental Illnesses (LAC 46:LX.505)

The Louisiana Department of Health and Hospitals, Louisiana Licensed Professional Counselors Board of Examiners has exercised the emergency provisions of the Administrative Procedures Act, specifically R.S. 49:953(B), to adopt rules relative to the Practice of Mental Health Counseling, to be designated as Section 505 of board rules. Previously, an Emergency Rule designated as Section 505 of board rules was promulgated due to Act 320 of the 2011 Regular Legislative Session. This Emergency Rule replaces the previously promulgated Emergency Rule due to Act 636 of the 2012 Regular Legislative Session. This Emergency Rule is effective March 1, 2013 for a period of 120 days.

This action is necessary due to the immediate effect of Act 636 of 2012, which defines duties for Louisiana Professional Counselors who treat "serious mental illnesses." Because Act 636 was effective on June 7, 2012 upon the Governor's signature, and because of the substantive changes made, there is insufficient time to promulgate these rules under the usual Administrative Procedures Act rulemaking process. However, the Louisiana Licensed Professional Counselors Board of Examiners is developing the permanent Rule associated with Act 636 of the 2012 Regular Legislative Session and plans to submit a Notice of Intent for publication in the April 20, 2013 edition of the *Louisiana Register.*

Title 46
PROFESSIONAL AND OCCUPATIONAL STANDARDS
Part LX. Licensed Professional Counselors Board of Examiners
Subpart 1. Licensed Professional Counselors
Chapter 5. License and Practice of Counseling
§505. Serious Mental Illnesses

A. Introduction. Act 636 of the 2012 Regular Session of the Louisiana Legislative amended the Louisiana Professional Counselors Practice Act as follows.

1. *Mental Health Counseling Services*—rendering or offering prevention, assessment, diagnosis, and treatment, which include psychotherapy, of mental, emotional, behavioral, and addiction disorders to individuals, groups, organizations, or the general public by a licensed professional counselor, that is consistent with his professional training as prescribed by R.S. 37:1107(A)(8), and code of ethics/behavior involving the application of principles, methods, or procedures of the mental health counseling profession.

2. However, a LPC may not assess, diagnose, or provide treatment to any individual suffering from a serious mental illness when medication may be indicated, unless the LPC consults and collaborates with a practitioner who is licensed or holds a permit with the State Board of Medical Examiners or an advanced practice registered nurse licensed by the Louisiana State Board of Nursing who is certified as a psychiatric nurse practitioner.

B. Applicability. The requirement for collaboration and consultation set forth above shall apply only if any of the following conditions are assessed, diagnosed, or treated by the counselor:

1. schizophrenia or schizoaffective disorder;
2. bipolar disorder;
3. panic disorder;
4. obsessive-compulsive disorder;
5. major depressive disorder- moderate to severe;
6. anorexia/bulimia;
7. intermittent explosive disorder;
8. autism;
9. psychosis NOS (not otherwise specified) when diagnosed in a child under seventeen years of age;
10. Rett's disorder;
11. Tourette's disorder;
12. dementia.

C. Definitions

1. As used herein:

Practitioner—an individual who is licensed or holds a permit with the State Board of Medical Examiners or an advanced practice registered nurse licensed by the Louisiana State Board of Nursing who is certified as a psychiatric nurse practitioner.

2. As used herein:

a. medication is indicated when the client has been diagnosed with a serious mental illness and:

i. when the client or legal guardian discloses the prescribed use of psychiatric medication, and/or

ii. when the LPC, client, or legal guardian believes that the use of prescribed psychiatric medication may facilitate treatment goals and improve client functioning.

3. As used herein:

Consultation and Collaboration—when medication is indicated for clients who have been diagnosed with a serious mental illness, the counselor shall initiate contact with a practitioner for the purpose of communicating the diagnosis and plan of care. The counselor will provide information to the practitioner regarding client progress as conditions warrant. Consultation and collaboration, for purposes of these rules and otherwise, shall not be construed as supervision. Further, consultation and collaboration does not include the transfer between the consulting professionals of responsibility for the client's care or the ongoing management of the client's presenting problem(s).

D. Effect on Existing Rules. All existing rules or parts thereof are hereby superseded and amended to the extent that they specifically conflict with these emergency rules. Existing board rules shall be revised and re-codified at such time as the final board rules implementing Act 636 are adopted.

AUTHORITY NOTE: Promulgated in accordance with R.S. 37:1105(D).

HISTORICAL NOTE: Promulgated by the Department of Health and Hospitals, Licensed Professional Counselors Board of Examiners, LR 38:

Mary Alice Olsan
Executive Director

1302#040

DECLARATION OF EMERGENCY

Department of Health and Hospitals
Office of Public Health

Added Controlled Dangerous Substance (LAC 46:LIII.2704)

The Department of Health and Hospitals, Office of Public Health (DHH,OPH), pursuant to the rulemaking authority granted to the secretary of DHH by R.S. 40:962(C) and R.S. 40:962(H), hereby adopts the following Emergency Rule for the protection of public health. This Rule is being promulgated in accordance with the Administrative Procedure Act (APA, R.S. 49:950 et seq.). This Emergency Rule, effective February 8, 2013, shall remain in effect for the maximum period allowed under the APA or until adoption of the final Rule pursuant to regular rulemaking procedures of the APA.

Based on the criteria and guidance set forth in R.S. 40:962(C) and 40:963, the secretary, under this rulemaking, has determined that the below listed substance has a high potential for abuse and should be scheduled as a controlled dangerous substance to avoid an imminent peril to the public health, safety or welfare. In reaching the decision to designate the below listed substance as a controlled dangerous substance under schedule I, the secretary has considered the criteria provided under R.S. 40:963 and the specific factors listed under R.S. 40:962(C). The secretary has determined that schedule I is the most appropriate due to his findings that the substance added herein has a high potential for abuse, the substance has no currently accepted medical use for treatment in the United States, and there is a lack of accepted safety for use of the substance under medical supervision.

Title 46
PROFESSIONAL AND OCCUPATIONAL STANDARDS
Part LIII. Pharmacists
Chapter 27. Controlled Dangerous Substances
Subchapter A. General Provisions
§2704. Added Controlled Dangerous Substances

A. The following drugs or substances are added to Schedule I of the Louisiana Uniform Controlled Dangerous Substances Law, R.S. 40:961 et seq.:

1. 2-(4-iodo-2,5-dimethoxyphenyl)-*N*-[(2-methoxyphenyl) methyl]ethanamine (25I NBOMe).

AUTHORITY NOTE: Promulgated in accordance with R.S. 40:962, R.S. 40:963, and R.S. 49:953(B).

HISTORICAL NOTE: Promulgated by the Department of Health and Hospitals, Office of Public Health, LR 39:

Bruce D. Greenstein
Secretary

1302#016

DECLARATION OF EMERGENCY

Department of Natural Resources
Office of Conservation

Statewide Orders No. 29-B and 29-B-a
(LAC 43:XIX.Chapters 2 and 11)

Order extending the deadline of drilling and completion operational and safety requirements for wells drilled in search or for the production of oil or natural gas at water locations

Pursuant to the power delegated under the laws of the State of Louisiana, and particularly Title 30 of the Revised Statutes of 1950, as amended, and in conformity with the provisions of the Louisiana Administrative Procedure Act, Title 49, Sections 953(B)(1) and (2), 954(B)(2), as amended, the following Emergency Rule and reasons therefore are now adopted and promulgated by the Commissioner of Conservation as being necessary to protect the public health, safety and welfare of the people of the state of Louisiana, as well as the environment generally, by extending the effectiveness of the Emergency Rule it supersedes for drilling and completion operational and safety requirements for wells drilled in search of oil and natural gas at water locations. The following Emergency Rule provides for the extension of the rule allowing more time to complete comprehensive rule amendments.

A. Need and Purpose for Emergency Rule. In light of the Gulf of Mexico Deepwater Horizon oil spill incident in federal waters approximately fifty miles off Louisiana's coast and the threat posed to the natural resources of the State, and the economic livelihood and property of the citizens of the State caused thereby, the Office of Conservation began a new review of its current drilling and completion operational and safety requirements for wells drilled in search of oil and natural gas at water locations. While the incidents of blowout of Louisiana wells is

minimal, occurring at less than three-tenths of one percent of the wells drilled in Louisiana since 1987, the great risk posed by blowouts at water locations to the public health, safety and welfare of the people of the State, as well as the environment generally, necessitated the rule amendments contained herein.

After implementation of the Emergency Rule, conservation formed an ad hoc committee to further study comprehensive rulemaking in order to promulgate new permanent regulations which ensure increased operational and safety requirements for the drilling or completion of oil and gas wells at water locations within the state. Based upon the work of this ad hoc committee, draft proposed rules that would replace these emergency rules are being created for the consideration and comment by interested parties. It is expected that these draft proposed rules will be published in the Potpourri Section of the Louisiana State Register on July 20, 2012.

B. Synopsis of Emergency Rule. The Emergency Rule set forth hereinafter is intended to provide greater protection to the public health, safety and welfare of the people of the State, as well as the environment generally by extending the effectiveness of new operational and safety requirements for the drilling and completion of oil and gas wells at water locations. Following the Gulf of Mexico-Deepwater Horizon oil spill, the Office of Conservation ("Conservation") investigated the possible expansion of Statewide Orders No. 29-B and 29-B-a requirements relating to well control at water locations. As part of the rule expansion project, Conservation reviewed the well control regulations of the U.S. Department of the Interior's Mineral Management Service or MMS (now named the Bureau of Safety and Environmental Enforcement). Except in the instances where it was determined that the MMS provisions were repetitive of other provisions already being incorporated, were duplicative of existing conservation regulations or were not applicable to the situations encountered in Louisiana's waters, all provisions of the MMS regulations concerning well control issues at water locations were promulgated in the preceding Emergency Rule, which this rule supersedes, were integrated into conservation's Statewide Orders No. 29-B and 29-B-a.

Conservation is currently performing a comprehensive review of its regulations as it considers future amendments to its operational rules and regulations found in Statewide Order No. 29-B and elsewhere. Specifically, the Emergency Rule extends the effectiveness of a new Chapter within Statewide Order No. 29-B (LAC 43:XIX.Chapter 2) to provide additional rules concerning the drilling and completion of oil and gas wells at water locations, specifically providing for the following: rig movement and reporting requirements, additional requirements for applications to drill, casing program requirements, mandatory diverter systems and blowout preventer requirements, oil and gas well-workover operations, diesel engine safety requirements, and drilling fluid regulations. Further, the Emergency Rule amends Statewide Order No. 29-B-a (LAC 43:XIX.Chapter 11) to provide for and expand upon rules concerning the required use of storm chokes in oil and gas wells at water locations.

C. Reasons. Recognizing the potential advantages of expanding the operational and safety requirements for the drilling and completion of oil and gas wells at water locations within the State, it has been determined that failure to establish such requirements in the form of an administrative rule may lead to the existence of an imminent peril to the public health, safety and welfare of the people of the state of Louisiana, as well as the environment generally. By this rule conservation extends the effectiveness of the following requirements until such time as final comprehensive rules may be promulgated or 120 days from the effective date of this rule, whichever occurs first.

Protection of the public and our environment therefore requires the commissioner of conservation to extend the following rules in order to assure that drilling and completion of oil and gas wells at water locations within the state are undertaken in accordance with all reasonable care and protection to the health, safety of the public, oil and gas personnel and the environment generally. The emergency rule, Amendment to Statewide Order No. 29-B (LAC 43:XIX.Chapter 2) and Statewide Order No. 29-B-a (LAC 43:XIXChapter 11) ("Emergency Rule") set forth hereinafter are adopted and extended by the Office of Conservation.

The Emergency Rule signed by the commissioner on January 23, 2012 and effective January 23, 2012 is hereby rescinded and replaced by the following Emergency Rule.

The effective date of this Emergency Rule will be February 8, 2013. The Emergency Rule herein adopted as a part thereof, shall remain effective for a period of not less than 120 days hereafter, or until the adoption of the final version of an amendment to Statewide Order No. 29-B and Statewide Order No. 29-B-a as noted herein, whichever occurs first.

Title 43
NATURAL RESOURCES
Part XIX. Office of Conservation—General Operations
Subpart 1. Statewide Order No. 29-B
Chapter 2. Additional Requirements for Water Locations

§201. Applicability

A. In addition to the requirements set forth in Chapter 1 of this Subpart, all oil and gas wells being drilled or completed at a water location within the state shall comply with this Chapter.

B. Unless otherwise stated herein, nothing within this Chapter shall alter the obligation of oil and gas operators to meet the requirements of Chapter 1 of this Subpart.

AUTHORITY NOTE: Promulgated in accordance with R.S. 30:4 et seq.

HISTORICAL NOTE: Promulgated by the Department of Natural Resources, Office of Conservation, LR 39:

§203. Application to Drill

A. In addition to the requirements set forth in Section 103 of this Subpart, at the time of submittal of an application for permit to drill, the applicant will provide an electronic copy on a disk of the Spill Prevention Control (SPC) plan that was submitted to DEQ pursuant to the provisions of Part IX of Title 33 of the Louisiana Administrative Code or any successor rule. Such plan shall become a part of the official well file.

AUTHORITY NOTE: Promulgated in accordance with R.S. 30:4 et seq.

HISTORICAL NOTE: Promulgated by the Department of Natural Resources, Office of Conservation, LR 39:

§204. Rig Movement and Reporting

A. The operator must report the movement of all drilling and workover rig units on and off locations to the appropriate district manager with the rig name, well serial number and expected time of arrival and departure.

B. Drilling operations on a platform with producing wells or other hydrocarbon flow must comply with the following.

1. An emergency shutdown station must be installed near the driller's console.

2. All producible wells located in the affected wellbay must be shut in below the surface and at the wellhead when:

a. a rig or related equipment is moved on and off a platform. This includes rigging up and rigging down activities within 500 feet of the affected platform;

b. a drilling unit is moved or skid between wells on a platform;

c. a mobile offshore drilling unit (MODU) moves within 500 feet of a platform.

3. Production may be resumed once the MODU is in place, secured, and ready to begin drilling operations.

C. The movement of rigs and related equipment on and off a platform or from well to well on the same platform, including rigging up and rigging down, shall be conducted in a safe manner. All wells in the same well-bay which are capable of producing hydrocarbons shall be shut in below the surface with a pump-through-type tubing plug and at the surface with a closed master valve prior to moving well-completion rigs and related equipment, unless otherwise approved by the district manager. A closed surface-controlled subsurface safety valve of the pump-through type may be used in lieu of the pump-through-type tubing plug, provided that the surface control has been locked out of operation. The well from which the rig or related equipment is to be moved shall also be equipped with a back-pressure valve prior to removing the blowout preventer (BOP) system and installing the tree.

AUTHORITY NOTE: Promulgated in accordance with R.S. 30:4 et seq.

HISTORICAL NOTE: Promulgated by the Department of Natural Resources, Office of Conservation, LR 39:

§205. Casing Program

A. General Requirements

1. The operator shall case and cement all wells with a sufficient number of strings of casing and quantity and quality of cement in a manner necessary to prevent fluid migration in the wellbore, protect the underground source of drinking water (USDW) from contamination, support unconsolidated sediments, and otherwise provide a means of control of the formation pressures and fluids.

2. The operator shall install casing necessary to withstand collapse, bursting, tensile, and other stresses that may be encountered and the well shall be cemented in a manner which will anchor and support the casing. Safety factors in casing program design shall be of sufficient magnitude to provide optimum well control while drilling and to assure safe operations for the life of the well.

3. All tubulars and cement shall meet or exceed API standards. Cementing jobs shall be designed so that cement composition, placement techniques, and waiting times ensure that the cement placed behind the bottom 500 feet of casing attains a minimum compressive strength of 500 psi before drilling out of the casing or before commencing completion operations.

4. Centralizers

a. Surface casing shall be centralized by means of placing centralizers in the following manner.

i. A centralizer shall be placed on every third joint from the shoe to surface, with two centralizers being placed on each of the lowermost three joints of casing.

ii. If conductor pipe is set, three centralizers shall be equally spaced on surface casing to fall within the conductor pipe.

b. Intermediate and production casing, and drilling and production liners shall be centralized by means of a centralizer placed every third joint from the shoe to top of cement. Additionally, two centralizers shall be placed on each of the lowermost three joints of casing.

c. All centralizers shall meet API standards.

5. A copy of the documentation furnished by the manufacturer, if new, or supplier, if reconditioned, which certifies tubular condition, shall be provided with the Well History and Work Resume Report (Form WH-1).

B. Conductor Pipe. A conductor pipe is that pipe ordinarily used for the purpose of supporting unconsolidated surface deposits. A conductor pipe shall be used during the drilling of any oil and gas well and shall be set at depth that allows use of a diverter system.

C. Surface Casing

1. Where no danger of pollution of the USDW exists, the minimum amount of surface or first-intermediate casing to be set shall be determined from Table 1 hereof, except that in no case shall less surface casing be set than an amount needed to protect the USDW unless an alternative method of USDW protection is approved by the district manager.

Table 1

Total Depth of Contact	Casing Required	Surface Casing Test Pressure (lbs. per sq. in.)
0-2500	100	300
2500-3000	150	600
3000-4000	300	600
4000-5000	400	600
5000-6000	500	750
6000-7000	800	1000
7000-8000	1000	1000
8000-9000	1400	1000
9000-Deeper	1800	1000

a. In known low-pressure areas, exceptions to the above may be granted by the commissioner or his agent. If, however, in the opinion of the commissioner, or his agent, the above regulations shall be found inadequate, and additional or lesser amount of surface casing and/or test pressure shall be required for the purpose of safety and the protection of the USDW.

2. Surface casing shall be cemented with a sufficient volume of cement to insure cement returns to the surface.

3. Surface casing shall be tested before drilling the plug by applying a minimum pump pressure as set forth in Table 1 after at least 200 feet of the mud-laden fluid has been displaced with water at the top of the column. If at the end of 30 minutes the pressure gauge shows a drop of 10 percent of test pressure as outlined in Table 1, the operator

shall be required to take such corrective measures as will insure that such surface casing will hold said pressure for 30 minutes without a drop of more than 10 percent of the test pressure. The provisions of Paragraph E.7, below, for the producing casing, shall also apply to the surface casing.

4. Cement shall be allowed to stand a minimum of 12 hours under pressure before initiating test or drilling plug. Under pressure is complied with if one float valve is used or if pressure is held otherwise.

D. Intermediate Casing/Drilling Liner

1. Intermediate casing is that casing used as protection against caving of heaving formations or when other means are not adequate for the purpose of segregating upper oil, gas or water-bearing strata. Intermediate casing/drilling liner shall be set when required by abnormal pressure or other well conditions.

2. If an intermediate casing string is deemed necessary by the district manager for the prevention of underground waste, such regulations pertaining to a minimum setting depth, quality of casing, and cementing and testing of sand, shall be determined by the Office of Conservation after due hearing. The provisions of Paragraph E.7 below, for the producing casing, shall also apply to the intermediate casing.

3. Intermediate casing/drilling liner shall be at minimum, cemented in such a manner, at least 500 feet above all known hydrocarbon bearing formations to insure isolation and, if applicable, all abnormal pressure formations are isolated from normal pressure formations, but in no case shall less cement be used than the amount necessary to fill the casing/liner annulus to a point 500 feet above the shoe or the top of the liner whichever is less. If a liner is used as an intermediate string, the cement shall be tested by a fluid entry test (-0.5 ppg EMW) to determine whether a seal between the liner top and next larger casing string has been achieved, and the liner-lap point must be at least 300 feet above the previous casing shoe. The drilling liner (and liner-lap) shall be tested to a pressure at least equal to the anticipated pressure to which the liner will be subjected to during the formation-integrity test below that liner shoe, or subsequent liner shoes if set. Testing shall be in accordance with Subsection G below.

4. Before drilling the plug in the intermediate string of casing, the casing shall be tested by pump pressure, as determined from Table 2 hereof, after 200 feet of mud-laden fluid in the casing has been displaced by water at the top of the column.

Table 2. Intermediate Casing and Liner

Depth Set	Test Pressure (lbs. per sq. in.)
2000-3000'	800
3000-6000'	1000
6000-9000'	1200
9000-and deeper	1500

a. If at the end of 30 minutes the pressure gauge shows a drop of 10 percent of the test pressure or more, the operator shall be required to take such corrective measures as will insure that casing is so set and cemented that it will hold said pressure for 30 minutes without a drop of more than 10 percent of the test pressure on the gauge.

5. Cement shall be allowed to stand a minimum of 12 hours under pressure and a minimum total of 24 hours before initiating pressure test. Under pressure is complied with if one or more float valves are employed and are shown to be holding the cement in place, or when other means of holding pressure is used. When an operator elects to perforate and squeeze or to cement around the shoe, he may proceed with such work after 12 hours have elapsed after placing the first cement.

6. If the test is unsatisfactory, the operator shall not proceed with the drilling of the well until a satisfactory test has been obtained.

E. Producing String

1. Producing string, production casing or production liner is that casing used for the purpose of segregating the horizon from which production is obtained and affording a means of communication between such horizons and the surface.

2. The producing string of casing shall consist of new or reconditioned casing, tested at mill test pressure or as otherwise designated by the Office of Conservation.

3. Cement shall be by the pump-and-plug method, or another method approved by the Office of Conservation. Production casing/production liner shall be at minimum, cemented in such a manner, at least 500 feet above all known hydrocarbon bearing formations to insure isolation and, if applicable, all abnormal pressure formations are isolated from normal pressure formations, but in no case shall less cement be used than the amount necessary to fill the casing/liner annulus to a point 500 feet above the shoe or the top of the liner whichever is less. If a liner is used as a producing string, the cement shall be tested by a fluid entry test (-0.5 ppg EMW) to determine whether a seal between the liner top and next larger casing string has been achieved, and the liner-lap point must be at least 300 feet above the previous casing shoe. The production liner (and liner-lap) shall be tested to a pressure at least equal to the anticipated pressure to which the liner will be subjected to during the formation-integrity test below that liner shoe, or subsequent liner shoes if set. Testing shall be in accordance with Subsection G below.

4. The amount of cement to be left remaining in the casing, until the requirements of Paragraph 5 below have been met, shall be not less than 20 feet. This shall be accomplished through the use of a float-collar, or other approved or practicable means, unless a full-hole cementer, or its equivalent, is used.

5. Cement shall be allowed to stand a minimum of 12 hours under pressure and a minimum total of 24 hours before initiating pressure test in the producing or oil string. Under pressure is complied with if one or more float valves are employed and are shown to be holding the cement in place, or when other means of holding pressure is used. When an operator elects to perforate and squeeze or to cement around the shoe, he may proceed with such work after 12 hours have elapsed after placing the first cement.

6. Before drilling the plug in the producing string of casing, the casing shall be tested by pump pressure, as determined from Table 3 hereof, after 200 feet of mud-laden fluid in the casing has been displaced by water at the top of the column.

Table 3. Producing String	
Depth Set	Test Pressure (lbs. per sq. in.)
2000-3000'	800
3000-6000'	1000
6000-9000'	1200
9000-and deeper	1500

a. If at the end of 30 minutes the pressure gauge shows a drop of 10 percent of the test pressure or more, the operator shall be required to take such corrective measures as will insure that the producing string of casing is so set and cemented that it will hold said pressure for 30 minutes without a drop of more than 10 percent of the test pressure on the gauge.

7. If the commissioner's agent is not present at the time designated by the operator for inspection of the casing tests of the producing string, the operator shall have such tests witnessed, preferably by an offset operator. An affidavit of test, on the form prescribed by the district office, signed by the operator and witness, shall be furnished to the district office showing that the test conformed satisfactorily to the above mentioned regulations before proceeding with the completion. If test is satisfactory, normal operations may be resumed immediately.

8. If the test is unsatisfactory, the operator shall not proceed with the completion of the well until a satisfactory test has been obtained.

F. Cement Evaluation

1. Cement evaluation tests (cement bond or temperature survey) shall be conducted for all casing and liners installed below surface casing to assure compliance with LAC 43:XIX.205.D.3 and E.3.

2. Remedial cementing operations that are required to achieve compliance with LAC 43:XIX.205.D.3 & E.3 shall be conducted following receipt of an approved work permit from the district manager for the proposed operations.

3. Cementing and wireline records demonstrating the presence of the required cement tops shall be retained by the operator for a period of two years.

G. Leak-Off Tests

1. A pressure integrity test must be conducted below the surface casing or liner and all intermediate casings or liners. The district manager may require a pressure-integrity test at the conductor casing shoe if warranted by local geologic conditions or the planned casing setting depth. Each pressure integrity test must be conducted after drilling at least 10 feet but no more than 50 feet of new hole below the casing shoe and must be tested to either the formation leak-off pressure or to the anticipated equivalent drilling fluid weight at the setting depth of the next casing string.

a. The pressure integrity test and related hole-behavior observations, such as pore-pressure test results, gas-cut drilling fluid, and well kicks must be used to adjust the drilling fluid program and the setting depth of the next casing string. All test results must be recorded and hole-behavior observations made during the course of drilling related to formation integrity and pore pressure in the driller's report.

b. While drilling, a safe drilling margin must be maintained. When this safe margin cannot be maintained, drilling operations must be suspended until the situation is remedied.

H. Prolonged Drilling Operations

1. If wellbore operations continue for more than 30 days within a casing string run to the surface:

a. drilling operations must be stopped as soon as practicable, and the effects of the prolonged operations on continued drilling operations and the life of the well evaluated. At a minimum, the operator shall:

i. caliper or pressure test the casing; and

ii. report evaluation results to the district manager and obtain approval of those results before resuming operations.

b. If casing integrity as determined by the evaluation has deteriorated to a level below minimum safety factors, the casing must be repaired or another casing string run. Approval from the district manager shall be obtained prior to any casing repair activity.

I. Tubing and Completion

1. Well-completion operations means the work conducted to establish the production of a well after the production-casing string has been set, cemented, and pressure-tested.

2. Prior to engaging in well-completion operations, crew members shall be instructed in the safety requirements of the operations to be performed, possible hazards to be encountered, and general safety considerations to protect personnel, equipment, and the environment. Date and time of safety meetings shall be recorded and available for review by the Office of Conservation.

3. When well-completion operations are conducted on a platform where there are other hydrocarbon-producing wells or other hydrocarbon flow, an emergency shutdown system (ESD) manually controlled station shall be installed near the driller's console or well-servicing unit operator's work station.

4. No tubing string shall be placed in service or continue to be used unless such tubing string has the necessary strength and pressure integrity and is otherwise suitable for its intended use.

5. A valve, or its equivalent, tested to a pressure of not less than the calculated bottomhole pressure of the well, shall be installed below any and all tubing outlet connections.

6. When a well develops a casing pressure, upon completion, equivalent to more than three-quarters of the internal pressure that will develop the minimum yield point of the casing, such well shall be required by the district manager to be killed, and a tubing packer to be set so as to keep such excessive pressure off of the casing.

7. Wellhead Connections. Wellhead connections shall be tested prior to installation at a pressure indicated by the district manager in conformance with conditions existing in areas in which they are used. Whenever such tests are made in the field, they shall be witnessed by an agent of the Office of Conservation. Tubing and tubingheads shall be free from obstructions in wells used for bottomhole pressure test purposes.

8. When the tree is installed, the wellhead shall be equipped so that all annuli can be monitored for sustained pressure. If sustained casing pressure is observed on a well, the operator shall immediately notify the district manager.

9. Wellhead, tree, and related equipment shall have a pressure rating greater than the shut-in tubing pressure and

shall be designed, installed, used, maintained, and tested so as to achieve and maintain pressure control. New wells completed as flowing or gas-lift wells shall be equipped with a minimum of one master valve and one surface safety valve, installed above the master valve, in the vertical run of the tree.

AUTHORITY NOTE: Promulgated in accordance with R.S. 30:4 et seq.

HISTORICAL NOTE: Promulgated by the Department of Natural Resources, Office of Conservation, LR 39:

§207. Diverter Systems and Blowout Preventers

A. Diverter System. A diverter system shall be required when drilling surface hole in areas where drilling hazards are known or anticipated to exist. The district manager may, at his discretion, require the use of a diverter system on any well. In cases where it is required, a diverter system consisting of a diverter sealing element, diverter lines, and control systems must be designed, installed, used, maintained, and tested to ensure proper diversion of gases, water, drilling fluids, and other materials away from facilities and personnel. The diverter system shall be designed to incorporate the following elements and characteristics:

1. dual diverter lines arranged to provide for maximum diversion capability;

2. at least two diverter control stations. One station shall be on the drilling floor. The other station shall be in a readily accessible location away from the drilling floor;

3. remote-controlled valves in the diverter lines. All valves in the diverter system shall be full-opening. Installation of manual or butterfly valves in any part of the diverter system is prohibited;

4. minimize the number of turns in the diverter lines, maximize the radius of curvature of turns, and minimize or eliminate all right angles and sharp turns;

5. anchor and support systems to prevent whipping and vibration;

6. rigid piping for diverter lines. The use of flexible hoses with integral end couplings in lieu of rigid piping for diverter lines shall be approved by the district manager.

B. Diverter Testing Requirements

1. When the diverter system is installed, the diverter components including the sealing element, diverter valves, control systems, stations and vent lines shall be function and pressure tested.

2. For drilling operations with a surface wellhead configuration, the system shall be function tested at least once every 24-hour period after the initial test.

3. After nippling-up on conductor casing, the diverter sealing element and diverter valves are to be pressure tested to a minimum of 200 psig. Subsequent pressure tests are to be conducted within seven days after the previous test.

4. Function tests and pressure tests shall be alternated between control stations.

5. Recordkeeping Requirements

a. Pressure and function tests are to be recorded in the driller's report and certified (signed and dated) by the operator's representative.

b. The control station used during a function or pressure test is to be recorded in the driller's report.

c. Problems or irregularities during the tests are to be recorded along with actions taken to remedy same in the driller's report.

d. All reports pertaining to diverter function and/or pressure tests are to be retained for inspection at the wellsite for the duration of drilling operations.

C. BOP Systems. The operator shall specify and insure that contractors design, install, use, maintain and test the BOP system to ensure well control during drilling, workover and all other appropriate operations. The surface BOP stack shall be installed before drilling below surface casing.

1. BOP system components for drilling activity located over a body of water shall be designed and utilized, as necessary, to control the well under all potential conditions that might occur during the operations being conducted and at minimum, shall include the following components:

a. annular-type well control component;

b. hydraulically-operated blind rams;

c. hydraulically-operated shear rams;

d. two sets of hydraulically-operated pipe rams.

2. Drilling activity with a tapered drill string shall require the installation of two or more sets of conventional or variable-bore pipe rams in the BOP stack to provide, at minimum, two sets of rams capable of sealing around the larger-size drill string and one set of pipe rams capable of sealing around the smaller-size drill string.

3. A set of hydraulically-operated combination rams may be used for the blind rams and shear rams.

4. All connections used in the surface BOP system must be flanged, including the connections between the well control stack and the first full-opening valve on the choke line and the kill line.

5. The commissioner of conservation, following a public hearing, may grant exceptions to the requirements of LAC 43:XIX.207.C-J.

D. BOP Working Pressure. The working pressure rating of any BOP component, excluding annular-type preventers, shall exceed the maximum anticipated surface pressure (MASP) to which it may be subjected.

E. BOP Auxiliary Equipment. All BOP systems shall be equipped and provided with the following:

1. a hydraulically actuated accumulator system which shall provide 1.5 times volume of fluid capacity to close and hold closed all BOP components, with a minimum pressure of 200 psig above the pre-charge pressure without assistance from a charging system;

2. a backup to the primary accumulator-charging system, supplied by a power source independent from the power source to the primary, which shall be sufficient to close all BOP components and hold them closed;

3. accumulator regulators supplied by rig air without a secondary source of pneumatic supply shall be equipped with manual overrides or other devices to ensure capability of hydraulic operation if the rig air is lost;

4. at least one operable remote BOP control station in addition to the one on the drilling floor. This control station shall be in a readily accessible location away from the drilling floor. If a BOP control station does not perform properly, operations shall be suspended until that station is operable;

5. a drilling spool with side outlets, if side outlets are not provided in the body of the BOP stack, to provide for separate kill and choke lines;

6. a kill line and a separate choke line are required. Each line must be equipped with two full-opening valves and at least one of the valves must be remotely controlled. The choke line shall be installed above the bottom ram. A manual valve must be used instead of the remotely controlled valve on the kill line if a check valve is installed between the two full-opening manual valves and the pump or manifold. The valves must have a working pressure rating equal to or greater than the working pressure rating of the connection to which they are attached, and must be installed between the well control stack and the choke or kill line. For operations with expected surface pressures greater than 3,500 psi, the kill line must be connected to a pump or manifold. The kill line inlet on the BOP stack must not be used for taking fluid returns from the wellbore;

7. a valve installed below the swivel (upper kelly cock), essentially full-opening, and a similar valve installed at the bottom of the kelly (lower kelly cock). An operator must be able to strip the lower kelly cock through the BOP stack. A wrench to fit each valve shall be stored in a location readily accessible to the drilling crew. If drilling with a mud motor and utilizing drill pipe in lieu of a kelly, you must install one kelly valve above, and one strippable kelly valve below the joint of pipe used in place of a kelly. On a top-drive system equipped with a remote-controlled valve, you must install a strippable kelly-type valve below the remote-controlled valve;

8. an essentially full-opening drill-string safety valve in the open position on the rig floor shall be available at all times while drilling operations are being conducted. This valve shall be maintained on the rig floor to fit all connections that are in the drill string. A wrench to fit the drill-string safety valve shall be stored in a location readily accessible to the drilling crew;

9. a safety valve shall be available on the rig floor assembled with the proper connection to fit the casing string being run in the hole;

10. locking devices installed on the ram-type preventers.

F. BOP Maintenance and Testing Requirements

1. The BOP system shall be visually inspected on a daily basis.

2. Pressure tests (low and high pressure) of the BOP system are to be conducted at the following times and intervals:

a. during a shop test prior to transport of the BOPs to the drilling location. Shop tests are not required for equipment that is transported directly from one well location to another;

b. immediately following installation of the BOPs;

c. within 14 days of the previous BOP pressure test, alternating between control stations and at a staggered interval to allow each crew to operate the equipment. If either control system is not functional, further operations shall be suspended until the nonfunctional, system is operable. Exceptions may be granted by the district manager in cases where a trip is scheduled to occur within 2 days after the 14-day testing deadline;

d. before drilling out each string of casing or liner (The district manager may require that a conservation enforcement specialist witness the test prior to drilling out each casing string or liner);

e. not more than 48 hours before a well is drilled to a depth that is within 1000 feet of a hydrogen sulfide zone (The district manager may require that a conservation enforcement specialist witness the test prior to drilling to a depth that is within 1000 feet of a hydrogen sulfide zone);

f. when the BOP tests are postponed due to well control problem(s), the BOP test is to be performed on the first trip out of the hole, and reasons for postponing the testing are to be recorded in the driller's report.

3. Low pressure tests (200-300 psig) of the BOP system (choke manifold, kelly valves, drill-string safety valves, etc.) are to be performed at the times and intervals specified in LAC 43:XIX.207.F.2 in accordance with the following provisions.

a. Test pressures are to be held for a minimum of five minutes.

b. Variable bore pipe rams are to be tested against the largest and smallest sizes of pipe in use, excluding drill collars and bottom hole assembly.

c. Bonnet seals are to be tested before running the casing when casing rams are installed in the BOP stack.

4. High pressure tests of the BOP system are to be performed at the times and intervals specified in LAC 43:XIX.207.F.2 in accordance with the following provisions.

a. Test pressures are to be held for a minimum of five minutes.

b. Ram-type BOP's, choke manifolds, and associated equipment are to be tested to the rated working pressure of the equipment or 500 psi greater than the calculated MASP for the applicable section of the hole.

c. Annular-type BOPs are to be tested to 70 percent of the rated working pressure of the equipment.

5. The annular and ram-type BOPs with the exception of the blind-shear rams are to be function tested every seven days between pressure tests. All BOP test records should be certified (signed and dated) by the operator's representative.

a. Blind-shear rams are to be tested at all casing points and at an interval not to exceed 30 days.

6. If the BOP equipment does not hold the required pressure during a test, the problem must be remedied and a retest of the affected component(s) performed. Additional BOP testing requirements:

a. use water to test the surface BOP system;

b. if a control station is not functional operations shall be suspended until that station is operable;

c. test affected BOP components following the disconnection or repair of any well-pressure containment seal in the wellhead or BOP stack assembly.

G. BOP Record Keeping. The time, date and results of pressure tests, function tests, and inspections of the BOP system are to be recorded in the driller's report. All pressure tests shall be recorded on an analog chart or digital recorder. All documents are to be retained for inspection at the wellsite for the duration of drilling operations and are to be retained in the operator's files for a period of 2 years.

H. BOP Well Control Drills. Weekly well control drills with each drilling crew are to be conducted during a period of activity that minimizes the risk to drilling operations. The drills must cover a range of drilling operations, including drilling with a diverter (if applicable), on-bottom drilling, and tripping. Each drill must be recorded in the driller's

report and is to include the time required to close the BOP system, as well as, the total time to complete the entire drill.

I. Well Control Safety Training. In order to ensure that all drilling personnel understand and can properly perform their duties prior to drilling wells which are subject to the jurisdiction of the Office of Conservation, the operator shall require that contract drilling companies provide and/or implement the following:

1. periodic training for drilling contractor employees which ensures that employees maintain an understanding of, and competency in, well control practices;

2. procedures to verify adequate retention of the knowledge and skills that the contract drilling employees need to perform their assigned well control duties.

J. Well Control Operations

1. The operator must take necessary precautions to keep wells under control at all times and must:

a. use the best available and safest drilling technology to monitor and evaluate well conditions and to minimize the potential for the well to flow or kick;

b. have a person onsite during drilling operations who represents the operators interests and can fulfill the operators responsibilities;

c. ensure that the tool pusher, operator's representative, or a member of the drilling crew maintains continuous surveillance on the rig floor from the beginning of drilling operations until the well is completed or abandoned, unless you have secured the well with blowout preventers (BOPs), bridge plugs, cement plugs, or packers;

d. use and maintain equipment and materials necessary to ensure the safety and protection of personnel, equipment, natural resources, and the environment.

2. Whenever drilling operations are interrupted, a downhole safety device must be installed, such as a cement plug, bridge plug, or packer. The device must be installed at an appropriate depth within a properly cemented casing string or liner.

a. Among the events that may cause interruption to drilling operations are:

i. evacuation of the drilling crew;

ii. inability to keep the drilling rig on location; or

iii. repair to major drilling or well-control equipment.

3. If the diverter or BOP stack is nippled down while waiting on cement, it must be determined, before nippling down, when it will be safe to do so based on knowledge of formation conditions, cement composition, effects of nippling down, presence of potential drilling hazards, well conditions during drilling, cementing, and post cementing, as well as past experience.

AUTHORITY NOTE: Promulgated in accordance with R.S. 30:4 et seq.

HISTORICAL NOTE: Promulgated by the Department of Natural Resources, Office of Conservation, LR 39:

§209. Casing-Heads

A. All wells shall be equipped with casing-heads with a test pressure in conformance with conditions existing in areas in which they are used. Casing-head body, as soon as installed shall be equipped with proper connections and valves accessible to the surface. Reconditioning shall be required on any well showing pressure on the casing-head, or leaking gas or oil between the oil string and next larger size casing string, when, in the opinion of the district managers, such pressure or leakage assume hazardous proportions or indicate the existence of underground waste. Mud-laden fluid may be pumped between any two strings of casing at the top of the hole, but no cement shall be used except by special permission of the commissioner or his agent.

AUTHORITY NOTE: Promulgated in accordance with R.S. 30:4 et seq.

HISTORICAL NOTE: Promulgated by the Department of Natural Resources, Office of Conservation, LR 39:

§211. Oil and Gas Well-Workover Operations

A. Definitions. When used in this section, the following terms shall have the meanings given below.

Expected Surface Pressure—the highest pressure predicted to be exerted upon the surface of a well. In calculating expected surface pressure, reservoir pressure as well as applied surface pressure must be considered.

Routine Operations—any of the following operations conducted on a well with the tree installed including cutting paraffin, removing and setting pump-through-type tubing plugs, gas-lift valves, and subsurface safety valves which can be removed by wireline operations, bailing sand, pressure surveys, swabbing, scale or corrosion treatment, caliper and gauge surveys, corrosion inhibitor treatment, removing or replacing subsurface pumps, through-tubing logging, wireline fishing, and setting and retrieving other subsurface flow-control devices.

Workover Operations—the work conducted on wells after the initial completion for the purpose of maintaining or restoring the productivity of a well.

B. When well-workover operations are conducted on a well with the tree removed, an emergency shutdown system (ESD) manually controlled station shall be installed near the driller's console or well-servicing unit operator's work station, except when there is no other hydrocarbon-producing well or other hydrocarbon flow on the platform.

C. Prior to engaging in well-workover operations, crew members shall be instructed in the safety requirements of the operations to be performed, possible hazards to be encountered, and general safety considerations to protect personnel, equipment, and the environment. Date and time of safety meetings shall be recorded and available for review.

D. Well-control fluids, equipment, and operations. The following requirements apply during all well-workover operations with the tree removed.

1. The minimum BOP-system components when the expected surface pressure is less than or equal to 5,000 psi shall include one annular-type well control component, one set of pipe rams, and one set of blind-shear rams.

2. The minimum BOP-system components when the expected surface pressure is greater than 5,000 psi shall include one annular-type well control component, two sets of pipe rams, and one set of blind-shear rams.

3. BOP auxillary equipment in accordance with the requirements of LAC 43:XIX.207.E.

4. When coming out of the hole with drill pipe or a workover string, the annulus shall be filled with well-control fluid before the change in such fluid level decreases the hydrostatic pressure 75 pounds per square inch (psi) or every five stands of drill pipe or workover string, whichever gives a lower decrease in hydrostatic pressure. The number of

stands of drill pipe or workover string and drill collars that may be pulled prior to filling the hole and the equivalent well-control fluid volume shall be calculated and posted near the operator's station. A mechanical, volumetric, or electronic device for measuring the amount of well-control fluid required to fill the hold shall be utilized.

5. The following well-control-fluid equipment shall be installed, maintained, and utilized:

a. a fill-up line above the uppermost BOP;

b. a well-control, fluid-volume measuring device for determining fluid volumes when filling the hole on trips; and

c. a recording mud-pit-level indicator to determine mud-pit-volume gains and losses. This indicator shall include both a visual and an audible warning device.

E. The minimum BOP-system components for well-workover operations with the tree in place and performed through the wellhead inside of conventional tubing using small-diameter jointed pipe (usually ¾ inch to 1 ¼ inch) as a work string, i.e., small-tubing operations, shall include two sets of pipe rams, and one set of blind rams.

1. An essentially full-opening work-string safety valve in the open position on the rig floor shall be available at all times while well-workover operations are being conducted. This valve shall be maintained on the rig floor to fit all connections that are in the work string. A wrench to fit the work-string safety valve shall be stored in a location readily accessible to the workover crew.

F. For coiled tubing operations with the production tree in place, you must meet the following minimum requirements for the BOP system:

1. BOP system components must be in the following order from the top down when expected surface pressures are less than or equal to 3,500 psi:

a. stripper or annular-type well control component;

b. hydraulically-operated blind rams;

c. hydraulically-operated shear rams;

d. kill line inlet;

e. hydraulically operated two-way slip rams;

f. hydraulically operated pipe rams.

2. BOP system components must be in the following order from the top down when expected surface pressures are greater than 3,500 psi:

a. stripper or annular-type well control component;

b. hydraulically-operated blind rams;

c. hydraulically-operated shear rams;

d. kill line inlet;

e. hydraulically-operated two-way slip rams;

f. hydraulically-operated pipe rams;

g. hydraulically-operated blind-shear rams. These rams should be located as close to the tree as practical.

3. BOP system components must be in the following order from the top down for wells with returns taken through an outlet on the BOP stack.

a. stripper or annular-type well control component;

b. hydraulically-operated blind rams;

c. hydraulically-operated shear rams;

d. kill line inlet;

e. hydraulically-operated two-way slip rams;

f. hydraulically-operated pipe rams;

g. a flow tee or cross;

h. hydraulically-operated pipe rams.

i. Hydraulically-operated blind-shear rams on wells with surface pressures less than or equal to 3,500 psi. As an option, the pipe rams can be placed below the blind-shear rams. The blind-shear rams should be placed as close to the tree as practical.

4. A set of hydraulically-operated combination rams may be used for the blind rams and shear rams.

5. A set of hydraulically-operated combination rams may be used for the hydraulic two-way slip rams and the hydraulically-operated pipe rams.

6. A dual check valve assembly must be attached to the coiled tubing connector at the downhole end of the coiled tubing string for all coiled tubing well-workover operations. To conduct operations without a downhole check valve, it must be approved by the district manager.

7. A kill line and a separate choke line are required. Each line must be equipped with two full-opening valves and at least one of the valves must be remotely controlled. A manual valve must be used instead of the remotely controlled valve on the kill line if a check valve is installed between the two full-opening manual valves and the pump or manifold. The valves must have a working pressure rating equal to or greater than the working pressure rating of the connection to which they are attached, and must be installed between the well control stack and the choke or kill line. For operations with expected surface pressures greater than 3,500 psi, the kill line must be connected to a pump or manifold. The kill line inlet on the BOP stack must not be used for taking fluid returns from the wellbore.

8. The hydraulic-actuating system must provide sufficient accumulator capacity to close-open-close each component in the BOP stack. This cycle must be completed with at least 200 psi above the pre-charge pressure without assistance from a charging system.

9. All connections used in the surface BOP system from the tree to the uppermost required ram must be flanged, including the connections between the well control stack and the first full-opening valve on the choke line and the kill line.

10. The coiled tubing connector must be tested to a low pressure of 200 to 300 psi, followed by a high pressure test to the rated working pressure of the connector or the expected surface pressure, whichever is less. The dual check valves must be successfully pressure tested to the rated working pressure of the connector, the rated working pressure of the dual check valve, expected surface pressure, or the collapse pressure of the coiled tubing, whichever is less.

G. The minimum BOP-system components for well-workover operations with the tree in place and performed by moving tubing or drill pipe in or out of a well under pressure utilizing equipment specifically designed for that purpose, i.e., snubbing operations, shall include the following:

1. one set of pipe rams hydraulically operated; and

2. two sets of stripper-type pipe rams hydraulically operated with spacer spool.

H. Test pressures must be recorded during BOP and coiled tubing tests on a pressure chart, or with a digital recorder, unless otherwise approved by the district manager.

The test interval for each BOP system component must be 5 minutes, except for coiled tubing operations, which must include a 10 minute high-pressure test for the coiled tubing string.

I. Wireline Operations. The operator shall comply with the following requirements during routine, as defined in Subsection A of this section, and nonroutine wireline workover operations:

1. Wireline operations shall be conducted so as to minimize leakage of well fluids. Any leakage that does occur shall be contained to prevent pollution.

2. All wireline perforating operations and all other wireline operations where communication exists between the completed hydrocarbon-bearing zone(s) and the wellbore shall use a lubricator assembly containing at least one wireline valve.

3. When the lubricator is initially installed on the well, it shall be successfully pressure tested to the expected shut-in surface pressure.

J. Following completion of the well-workover activity, all such records shall be retained by the operator for a period of 2 years.

K. An essentially full-opening work-string safety valve in the open position on the rig floor shall be available at all times while well-workover operations are being conducted. This valve shall be maintained on the rig floor to fit all connections that are in the work string. A wrench to fit the work-string safety valve shall be stored in a location readily accessible to the workover crew.

AUTHORITY NOTE: Promulgated in accordance with R.S. 30:4 et seq.

HISTORICAL NOTE: Promulgated by the Department of Natural Resources, Office of Conservation, LR 39:

§213. Diesel Engine Safety Requirements

A. Each diesel engine with an air take device must be equipped to shut down the diesel engine in the event of a runaway.

1. A diesel engine that is not continuously manned, must be equipped with an automatic shutdown device.

2. A diesel engine that is continuously manned, may be equipped with either an automatic or remote manual air intake shutdown device.

3. A diesel engine does not have to be equipped with an air intake device if it meets one of the following criteria:

a. starts a larger engine;

b. powers a firewater pump;

c. powers an emergency generator;

d. powers a bop accumulator system;

e. provides air supply to divers or confined entry personnel;

f. powers temporary equipment on a nonproducing platform;

g. powers an escape capsule; or

h. powers a portable single-cylinder rig washer.

AUTHORITY NOTE: Promulgated in accordance with R.S. 30:4 et seq.

HISTORICAL NOTE: Promulgated by the Department of Natural Resources, Office of Conservation, LR 39:

§215. Drilling Fluids

A. The inspectors and engineers of the Office of Conservation shall have access to the mud records of any drilling well, except those records which pertain to special muds and special work with respect to patentable rights, and shall be allowed to conduct any essential test or tests on the mud used in the drilling of a well. When the conditions and tests indicate a need for a change in the mud or drilling fluid program in order to insure proper control of the well, the district manager shall require the operator or company to use due diligence in correcting any objectionable conditions.

B. Well-control fluids, equipment, and operations shall be designed, utilized, maintained, and/or tested as necessary to control the well in foreseeable conditions and circumstances.

C. The well shall be continuously monitored during all operations and shall not be left unattended at any time unless the well is shut in and secured.

D. The following well-control-fluid equipment shall be installed, maintained, and utilized:

1. a fill-up line above the uppermost BOP;

2. a well-control, fluid-volume measuring device for determining fluid volumes when filling the hole on trips; and

3. a recording mud-pit-level indicator to determine mud-pit-volume gains and losses. This indicator shall include both a visual and an audible warning device.

E. Safe Practices

1. Before starting out of the hole with drill pipe, the drilling fluid must be properly conditioned. A volume of drilling fluid equal to the annular volume must be circulated with the drill pipe just off-bottom. This practice may be omitted if documentation in the driller's report shows:

a. no indication of formation fluid influx before starting to pull the drill pipe from the hole;

b. the weight of returning drilling fluid is within 0.2 pounds per gallon of the drilling fluid entering the hole.

2. Record each time drilling fluid is circulated in the hole in the driller’s report.

3. When coming out of the hole with drill pipe, the annulus must be filled with drilling fluid before the hydrostatic pressure decreases by 75 psi, or every five stands of drill pipe, whichever gives a lower decrease in hydrostatic pressure. The number of stands of drill pipe and drill collars that you may pull must be calculated before you fill the hole. Both sets of numbers must be posted near the driller's station. A mechanical, volumetric, or electronic device must be used to measure the drilling fluid required to fill the hole.

4. Controlled rates must be used to run and pull drill pipe and downhole tools so you do not swab or surge the well.

5. When there is an indication of swabbing or influx of formation fluids, appropriate measures must be taken to control the well. Circulate and condition the well, on or near-bottom, unless well or drilling-fluid conditions prevent running the drill pipe back to the bottom.

6. The maximum pressures must be calculated and posted near the driller's console that you may safely contain under a shut-in BOP for each casing string. The pressures posted must consider the surface pressure at which the formation at the shoe would break down, the rated working pressure of the BOP stack, and 70 percent of casing burst (or casing test as approved by the district manager). As a minimum, you must post the following two pressures:

a. the surface pressure at which the shoe would break down. This calculation must consider the current drilling fluid weight in the hole; and

b. the lesser of the BOP's rated working pressure or 70 percent of casing-burst pressure (or casing test otherwise approved by the district manager).

7. An operable drilling fluid-gas separator and degasser must be installed before you begin drilling operations. This equipment must be maintained throughout the drilling of the well.

8. The test fluids in the hole must be circulated or reverse circulated before pulling drill-stem test tools from the hole. If circulating out test fluids is not feasible, with an appropriate kill weight fluid test fluids may be bullhead out of the drill-stem test string and tools.

9. When circulating, the drilling fluid must be tested at least once each work shift or more frequently if conditions warrant. The tests must conform to industry-accepted practices and include density, viscosity, and gel strength; hydrogen ion concentration; filtration; and any other tests the district manager requires for monitoring and maintaining drilling fluid quality, prevention of downhole equipment problems and for kick detection. The test results must be recorded in the drilling fluid report.

F. Monitoring Drilling Fluids

1. Once drilling fluid returns are established, the following drilling fluid-system monitoring equipment must be installed throughout subsequent drilling operations. This equipment must have the following indicators on the rig floor:

a. pit level indicator to determine drilling fluid-pit volume gains and losses. This indicator must include both a visual and an audible warning device;

b. volume measuring device to accurately determine drilling fluid volumes required to fill the hole on trips;

c. return indicator devices that indicate the relationship between drilling fluid-return flow rate and pump discharge rate. This indicator must include both a visual and an audible warning device; and

d. gas-detecting equipment to monitor the drilling fluid returns. The indicator may be located in the drilling fluid-logging compartment or on the rig floor. If the indicators are only in the logging compartment, you must continually man the equipment and have a means of immediate communication with the rig floor. If the indicators are on the rig floor only, an audible alarm must be installed.

G. Drilling Fluid Quantities

1. Quantities of drilling fluid and drilling fluid materials must be maintained and replenished at the drill site as necessary to ensure well control. These quantities must be determined based on known or anticipated drilling conditions, rig storage capacity, weather conditions, and estimated time for delivery.

2. The daily inventories of drilling fluid and drilling fluid materials must be recorded, including weight materials and additives in the drilling fluid report.

3. If there are not sufficient quantities of drilling fluid and drilling fluid material to maintain well control, the drilling operations must be suspended.

H. Drilling Fluid-Handling Areas

1. Drilling fluid-handling areas must be classified according to API RP 500, Recommended Practice for Classification of Locations for Electrical Installations at Petroleum Facilities, Classified as Class I, Division 1 and Division 2 or API RP 505, Recommended Practice for Classification of Locations for Electrical Installations at Petroleum Facilities, Classified as Class 1, Zone 0, Zone 1, and Zone 2. In areas where dangerous concentrations of combustible gas may accumulate. A ventilation system and gas monitors must be installed and maintained. Drilling fluid-handling areas must have the following safety equipment:

a. A ventilation system capable of replacing the air once every 5 minutes or 1.0 cubic feet of air-volume flow per minute, per square foot of area, whichever is greater. In addition:

i. if natural means provide adequate ventilation, then a mechanical ventilation system is not necessary;

ii. if a mechanical system does not run continuously, then it must activate when gas detectors indicate the presence of 1 percent or more of combustible gas by volume; and

iii. if discharges from a mechanical ventilation system may be hazardous, the drilling fluid-handling area must be maintained at a negative pressure. The negative pressure area must be protected by using at least one of the following: a pressure-sensitive alarm, open-door alarms on each access to the area, automatic door-closing devices, air locks, or other devices approved by the district manager;

b. Gas detectors and alarms except in open areas where adequate ventilation is provided by natural means. Gas detectors must be tested and recalibrated quarterly. No more than 90 days may elapse between tests;

c. Explosion-proof or pressurized electrical equipment to prevent the ignition of explosive gases. Where air is used for pressuring equipment, the air intake must be located outside of and as far as practicable from hazardous areas; and

d. Alarms that activate when the mechanical ventilation system fails.

AUTHORITY NOTE: Promulgated in accordance with R.S. 30:4 et seq.

HISTORICAL NOTE: Promulgated by the Department of Natural Resources, Office of Conservation, LR 39:

Subpart 4. Statewide Order No. 29-B-a

Chapter 11. Required Use of Storm Chokes

§1101. Scope

A. Order establishing rules and regulations concerning the required use of storm chokes to prevent blowouts or uncontrolled flow in the case of damage to surface equipment.

AUTHORITY NOTE: Promulgated in accordance with Act 157 of the Legislature of 1940.

HISTORICAL NOTE: Adopted by the Department of Conservation, March 15, 1946, amended March 1, 1961, amended and promulgated by the Department of Natural Resources, Office of Conservation, LR 20:1127 (October 1994), LR 39:

§1103. Applicability

A. All wells capable of flow with a surface pressure in excess of 100 pounds, falling within the following categories, shall be equipped with storm chokes:

1. any locations inaccessible during periods of storm and/or floods, including spillways;

2. located in bodies of water being actively navigated;

3. located in wildlife refuges and/or game preserves;

4. located within 660 feet of railroads, ship channels, and other actively navigated bodies of water;

5. located within 660 feet of state and federal highways in Southeast Louisiana, in that area East of a North-South line drawn through New Iberia and South of an East-West line through Opelousas;

6. located within 660 feet of state and federal highways in Northeast Louisiana, in that area bounded on the West by the Ouachita River, on the North by the Arkansas-Louisiana line, on the East by the Mississippi River, and on the South by the Black and Red Rivers;

7. located within 660 feet of the following highways:

a. U.S. Highway 71 between Alexandria and Krotz Springs;

b. U.S. Highway 190 between Opelousas and Krotz Springs;

c. U.S. Highway 90 between Lake Charles and the Sabine River;

8. located within the corporate limits of any city, town, village, or other municipality.

AUTHORITY NOTE: Promulgated in accordance with Act 157 of the Legislature of 1940.

HISTORICAL NOTE: Adopted by the Department of Conservation, March 15, 1946, amended March 1, 1961, amended and promulgated by Department of Natural Resources, Office of Conservation, LR 20:1128 (October 1994), LR 39:

§1104. General Requirements for Storm Choke Use at Water Locations

A. This Section only applies to oil and gas wells at water locations.

B. A subsurface safety valve shall be designed, installed, used, maintained, and tested to ensure reliable operation.

1. The device shall be installed at a depth of 100 feet or more below the seafloor within 2 days after production is established.

2. Until a subsurface safety device is installed, the well shall be attended in the immediate vicinity so that emergency actions may be taken while the well is open to flow. During testing and inspection procedures, the well shall not be left unattended while open to production unless a properly operating subsurface-safety device has been installed in the well.

3. The well shall not be open to flow while the subsurface safety device is removed, except when flowing of the well is necessary for a particular operation such as cutting paraffin, bailing sand, or similar operations.

4. All SSSV's must be inspected, installed, used, maintained, and tested in accordance with American Petroleum Institute Recommended Practice 14B, Recommended Practice for Design, Installation, Repair, and Operation of Subsurface Safety Valve Systems.

C. Temporary Removal for Routine Operations

1. Each wireline or pumpdown-retrievable subsurface safety device may be removed, without further authorization or notice, for a routine operation which does not require the approval of Form DM-4R.

2. The well shall be identified by a sign on the wellhead stating that the subsurface safety device has been removed. If the master valve is open, a trained person shall be in the immediate vicinity of the well to attend the well so that emergency actions may be taken, if necessary.

3. A platform well shall be monitored, but a person need not remain in the well-bay area continuously if the master valve is closed. If the well is on a satellite structure, it must be attended or a pump-through plug installed in the tubing at least 100 feet below the mud line and the master valve closed, unless otherwise approved by the district manager.

4. Each operator shall maintain records indicating the date a subsurface safety valve is removed, the reason for its removal, and the date it is reinstalled

D. Emergency Action. In the event of an emergency, such as an impending storm, any well not equipped with a subsurface safety device and which is capable of natural flow shall have the device properly installed as soon as possible with due consideration being given to personnel safety.

E. Design and Operation

1. All SSSVs must be inspected, installed, maintained, and tested in accordance with API RP 14H, Recommended Practice for Installation, Maintenance, and Repair of Surface Safety Valves and Underwater Safety Valves Offshore.

2. Testing requirements for subsurface safety devices are as follows.

a. All SSSV's shall be tested for operation and for leakage at least once each calendar month, but at no time shall more than 6 weeks elapse between tests. SSSV's must be tested in accordance with the test procedures specified in API RP 14H. If a SSSV does not operate properly or if any fluid flow is observed during the leakage test, the valve shall be repaired or replaced.

b. Each subsurface-controlled SSSV installed in a well shall be removed, inspected, and repaired or adjusted, as necessary, and reinstalled or replaced at intervals not exceeding 6 months for those valves not installed in a landing nipple and 12 months for those valves installed in a landing nipple.

3. Records must be retained for a period of 2 years for each safety device installed.

AUTHORITY NOTE: Promulgated in accordance with Act 157 of the Legislature of 1940.

HISTORICAL NOTE: Promulgated by Department of Natural Resources, Office of Conservation, LR 39:

§1105. Waivers

A. Onshore Wells. Where the use of storm chokes would unduly interfere with normal operation of a well, the District Manager may, upon submission of pertinent data, in writing, waive the requirements of this order.

B. Offshore Wells

1. The district manager, upon submission of pertinent data, in writing explaining the efforts made to overcome the particular difficulties encountered, may waive the use of a subsurface safety valve under the following circumstances, and may, in his discretion, require in lieu thereof a surface safety valve:

a. where sand is produced to such an extent or in such a manner as to tend to plug the tubing or make inoperative the subsurface safety valve;

b. when the flowing pressure of the well is in excess of 100 psi but is inadequate to activate the subsurface safety valve;

c. where flow rate fluctuations or water production difficulties are so severe that the subsurface safety valve would prevent the well from producing at its allowable rate;

d. where mechanical well conditions do not permit the installation of a subsurface safety valve;

e. in such other cases as the district manager may deem necessary to grant an exception.

AUTHORITY NOTE: Promulgated in accordance with Act 157 of the Legislature of 1940.

HISTORICAL NOTE: Adopted by the Department of Conservation, March 1, 1961, amended March 15, 1961, amended and promulgated by Department of Natural Resources, Office of Conservation, LR 20:1128 (October 1994), LR 39:

James H. Welsh
Commissioner

1302#109

DECLARATION OF EMERGENCY

Department of Wildlife and Fisheries
Wildlife and Fisheries Commission

Fall Inshore Shrimp Season Closure

In accordance with the emergency provisions of R.S. 49:953 of the Administrative Procedure Act which allows the Wildlife and Fisheries Commission to use emergency procedures to set shrimp seasons and R.S. 56:497 which allows the Wildlife and Fisheries Commission to delegate to the secretary of the department the powers, duties and authority to set seasons, and in accordance with a Declaration of Emergency adopted by the Wildlife and Fisheries Commission on August 2, 2012 which authorized the secretary of the Department of Wildlife and Fisheries to close the fall shrimp season when biological and technical data indicate the need to do so or if enforcement problems develop, and following notification to the chairman of the Wildlife and Fisheries Commission, the secretary of the Department of Wildlife and Fisheries does hereby declare that the 2012 fall inshore shrimp season will close on January 18, 2013 at official sunset in that portion of state inside waters east of the Mississippi River from the Louisiana/Mississippi state line southward to the eastern shore of South Pass of the Mississippi River except for the open waters of Breton and Chandeleur Sounds as described by the double-rig line in R.S. 56:495.1(A)2.

The number of small white shrimp taken in biological samples within these waters to be closed has increased while water temperatures have decreased and these waters are being closed to protect these shrimp as they over-winter.

Robert J. Barham
Secretary

1302#002

DECLARATION OF EMERGENCY

Department of Wildlife and Fisheries
Wildlife and Fisheries Commission

Recreational and Commercial Fisheries
Closure—February 7, 2013

In accordance with the emergency provisions of R.S. 49:953 of the Administrative Procedure Act, and under the authority of R.S. 56:6.1, the Wildlife and Fisheries Commission hereby closes all commercial fishing, effective immediately February 7, 2013 in the following areas:

Those waters north of 28 degrees 56 minutes 30 seconds north latitude and south of 28 degrees 59 minutes 30 seconds north latitude from the eastern shore of Southwest Pass of the Mississippi River eastward to a line beginning at 28 degrees 59 minutes 30 seconds north latitude and 89 degrees 19 minutes 50 seconds west longitude and ending at 28 degrees 56 minutes 30 seconds north latitude and 89 degrees 23 minutes 00 seconds west longitude, and those waters north of 29 degrees 02 minutes 00 seconds north latitude and south of 29 degrees 02 minutes 20 seconds north latitude from the western shore of South Pass of the Mississippi River westward to 89 degrees 15 minutes 25 seconds west longitude, and those waters north of 28 degrees 59 minutes 40 seconds north latitude and south of 29 degrees 02 minutes 00 seconds north latitude from the western shore of South Pass of the Mississippi River westward to 89 degrees 15 minutes 25 seconds west longitude and southeastward along a line beginning at 29 degrees 02 minutes 00 seconds north latitude and 89 degrees 15 minutes 25 seconds west longitude and ending at 28 degrees 59 minutes 40 seconds north latitude and 89 degrees 10 minutes 15 seconds west longitude, and those waters west of the western shore of South Pass of the Mississippi River south of 28 degrees 59 minutes 40 seconds north latitude bounded by the following coordinates: 1) 28 degrees 59 minutes 15 seconds north latitude and 89 degrees 08 minutes 15 seconds west longitude, 2) 28 degrees 58 minutes 20 seconds north latitude and 89 degrees 10 minutes 00 seconds west longitude, 3) 28 degrees 59 minutes 01 seconds north latitude and 89 degrees 11 minutes 00 seconds west longitude, 4) 28 degrees 59 minutes 40 seconds north latitude and 89 degrees 10 minutes 15 seconds west longitude, and those waters east of the eastern shore of South Pass of the Mississippi River and south of 29 degrees 01 minutes 50 seconds north latitude eastward to a line beginning at 29 degrees 01 minutes 50 seconds north latitude and 89 degrees 07 minutes 20 seconds west longitude and ending at 28 degrees 59 minutes 35 seconds north latitude and 89 degrees 08 minutes 00 seconds west longitude, and those waters adjacent to but not including Northeast Pass and Southeast Pass of the Mississippi River and bounded by the following coordinates: 1) 29 degrees 08 minutes 35 seconds north latitude and 89 degrees 04 minutes 20 seconds west longitude, 2) 29 degrees 08 minutes 15 seconds north latitude and 89 degrees 02 minutes 10 seconds west longitude, 3) 29 degrees 04 minutes 50 seconds north latitude and 89 degrees 04 minutes 10 seconds west longitude, 4) 29 degrees 05 minutes 30 seconds north latitude and 89 degrees 05 minutes 10 seconds west longitude, and those waters south and west of Pass a Loutre of the Mississippi River and east of 89 degrees 05 minutes 35 seconds west longitude bounded by the following coordinates: 1) 29 degrees 11 minutes 25 seconds north latitude and 89 degrees 03 minutes 30 seconds west longitude, 2) 29 degrees 11 minutes 00 seconds north latitude and 89 degrees 02 minutes 25 seconds west longitude, 3) 29 degrees 09 minutes 00 seconds north latitude and 89 degrees 05 minutes 35 seconds west longitude, 4) 29 degrees 11 minutes 00 seconds north latitude and 89 degrees 05 minutes 35 seconds west longitude, and those waters south of North Pass of the Mississippi River bounded by the following coordinates: 1) 29 degrees 11 minutes 35 seconds north latitude and 89 degrees 02 minutes 55 seconds west longitude, 2) 29 degrees

12 minutes 35 seconds north latitude and 89 degrees 01 minutes 05 seconds west longitude, 3) 29 degrees 11 minutes 35 seconds north latitude and 89 degrees 01 minutes 10 seconds west longitude, 4) 29 degrees 11 minutes 10 seconds north latitude and 89 degrees 02 minutes 00 seconds west longitude, and those state inside and outside waters adjacent to Grand Terre Island bounded by the following coordinates: 1) 29 degrees 18 minutes 20 seconds north latitude and 89 degrees 54 minutes 50 seconds west longitude, 2) 29 degrees 17 minutes 10 seconds north latitude and 89 degrees 53 minutes 50 seconds west longitude, 3) 29 degrees 15 minutes 40 seconds north latitude and 89 degrees 56 minutes 00 seconds west longitude, 4) 29 degrees 17 minutes 00 seconds north latitude and 89 degrees 57 minutes 20 seconds west longitude, and those state inside waters in the upper Barataria Basin north of 29 degrees 26 minutes 00 seconds north latitude and south of 29 degrees 29 minutes 00 seconds north latitude from 89 degrees 50 minutes 00 seconds west longitude westward to 89 degrees 57 minutes 00 seconds west longitude, and that portion of state outside waters seaward a distance of one mile from the inside/outside shrimp line from the eastern shore of Belle Pass at 90 degrees 13 minutes 30 seconds west longitude eastward to the western shore of Caminada Pass at 90 degrees 02 minutes 46.597 seconds west longitude.

Recreational fishing is open in all state inside and outside territorial waters, except in the following areas, where only recreational angling and charter boat angling is allowed: those state inside and outside waters adjacent to Grand Terre Island bounded by the following coordinates: 1) 29 degrees 18 minutes 20 seconds north latitude and 89 degrees 54 minutes 50 seconds west longitude, 2) 29 degrees 17 minutes 10 seconds north latitude and 89 degrees 53 minutes 50 seconds west longitude, 3) 29 degrees 15 minutes 40 seconds north latitude and 89 degrees 56 minutes 00 seconds west longitude, 4) 29 degrees 17 minutes 00 seconds north latitude and 89 degrees 57 minutes 20 seconds west longitude, and those state inside waters in the upper Barataria Basin north of 29 degrees 26 minutes 00 seconds north latitude and south of 29 degrees 29 minutes 00 seconds north latitude from 89 degrees 50 minutes 00 seconds west longitude westward to 89 degrees 57 minutes 00 seconds west longitude, and that portion of state outside waters seaward a distance of one mile from the inside/outside shrimp line from the eastern shore of Belle Pass at 90 degrees 13 minutes 30 seconds west longitude eastward to the western shore of Caminada Pass at 90 degrees 02 minutes 46.597 seconds west longitude.

The Deepwater Horizon drilling rig accident has resulted in a significant release of hydrocarbon pollutants into the waters offshore of southeast Louisiana and these pollutants have the potential to impact fish and other aquatic life in portions of these coastal waters. Efforts have been made and are continuing to be made to minimize the potential threats to fish and other aquatic life.

The commission hereby grants authority to the Secretary of the Department of Wildlife and Fisheries to open, close, reopen-reclose, broaden or otherwise modify the areas closed and opened to fishing if biological, environmental and technical data indicate the need to do so, or as needed to effectively implement the provisions herein upon notification to the Chairman of the Wildlife and Fisheries Commission.

Ronald Graham
Chairman

1302#044

DECLARATION OF EMERGENCY

Department of Wildlife and Fisheries
Wildlife and Fisheries Commission

Recreational and Commercial Fisheries
Closure—January 17, 2013

In accordance with the emergency provisions of R.S. 49:953 of the Administrative Procedure Act, and under the authority of R.S. 56:6.1, the Wildlife and Fisheries Commission hereby closes all commercial fishing, effective immediately January 17, 2013 in the following areas:

Those waters north of 28 degrees 56 minutes 30 seconds north latitude and south of 28 degrees 59 minutes 30 seconds north latitude from the eastern shore of Southwest Pass of the Mississippi River eastward to a line beginning at 28 degrees 59 minutes 30 seconds north latitude and 89 degrees 19 minutes 50 seconds west longitude and ending at 28 degrees 56 minutes 30 seconds north latitude and 89 degrees 23 minutes 00 seconds west longitude, and those waters north of 29 degrees 02 minutes 00 seconds north latitude and south of 29 degrees 02 minutes 20 seconds north latitude from the western shore of South Pass of the Mississippi River westward to 89 degrees 15 minutes 25 seconds west longitude, and those waters north of 28 degrees 59 minutes 40 seconds north latitude and south of 29 degrees 02 minutes 00 seconds north latitude from the western shore of South Pass of the Mississippi River westward to 89 degrees 15 minutes 25 seconds west longitude and southeastward along a line beginning at 29 degrees 02 minutes 00 seconds north latitude and 89 degrees 15 minutes 25 seconds west longitude and ending at 28 degrees 59 minutes 40 seconds north latitude and 89 degrees 10 minutes 15 seconds west longitude, and those waters west of the western shore of South Pass of the Mississippi River south of 28 degrees 59 minutes 40 seconds north latitude bounded by the following coordinates: 1) 28 degrees 59 minutes 15 seconds north latitude and 89 degrees 08 minutes 15 seconds west longitude, 2) 28 degrees 58 minutes 20 seconds north latitude and 89 degrees 10 minutes 00 seconds west longitude, 3) 28 degrees 59 minutes 01 seconds north latitude and 89 degrees 11 minutes 00 seconds west longitude, 4) 28 degrees 59 minutes 40 seconds north latitude and 89 degrees 10 minutes 15 seconds west longitude, and those waters east of the eastern shore of South Pass of the Mississippi River and south of 29 degrees 01 minutes 50 seconds north latitude eastward to a line beginning at 29 degrees 01 minutes 50 seconds north latitude and 89 degrees 07 minutes 20 seconds west longitude and ending at 28 degrees 59 minutes 35 seconds north latitude and 89 degrees 08 minutes 00 seconds west longitude, and those waters adjacent to but not including Northeast Pass and Southeast Pass of the Mississippi River and bounded by the following coordinates: 1) 29 degrees 08 minutes 35

seconds north latitude and 89 degrees 04 minutes 20 seconds west longitude, 2) 29 degrees 08 minutes 15 seconds north latitude and 89 degrees 02 minutes 10 seconds west longitude, 3) 29 degrees 04 minutes 50 seconds north latitude and 89 degrees 04 minutes 10 seconds west longitude, 4) 29 degrees 05 minutes 30 seconds north latitude and 89 degrees 05 minutes 10 seconds west longitude, and those waters south and west of Pass a Loutre of the Mississippi River and east of 89 degrees 05 minutes 35 seconds west longitude bounded by the following coordinates: 1) 29 degrees 11 minutes 25 seconds north latitude and 89 degrees 03 minutes 30 seconds west longitude, 2) 29 degrees 11 minutes 00 seconds north latitude and 89 degrees 02 minutes 25 seconds west longitude, 3) 29 degrees 09 minutes 00 seconds north latitude and 89 degrees 05 minutes 35 seconds west longitude, 4) 29 degrees 11 minutes 00 seconds north latitude and 89 degrees 05 minutes 35 seconds west longitude, and those waters south of North Pass of the Mississippi River bounded by the following coordinates: 1) 29 degrees 11 minutes 35 seconds north latitude and 89 degrees 02 minutes 55 seconds west longitude, 2) 29 degrees 12 minutes 35 seconds north latitude and 89 degrees 01 minutes 05 seconds west longitude, 3) 29 degrees 11 minutes 35 seconds north latitude and 89 degrees 01 minutes 10 seconds west longitude, 4) 29 degrees 11 minutes 10 seconds north latitude and 89 degrees 02 minutes 00 seconds west longitude, and those state inside and outside waters adjacent to Grand Terre Island bounded by the following coordinates: 1) 29 degrees 18 minutes 20 seconds north latitude and 89 degrees 54 minutes 50 seconds west longitude, 2) 29 degrees 17 minutes 10 seconds north latitude and 89 degrees 53 minutes 50 seconds west longitude, 3) 29 degrees 15 minutes 40 seconds north latitude and 89 degrees 56 minutes 00 seconds west longitude, 4) 29 degrees 17 minutes 00 seconds north latitude and 89 degrees 57 minutes 20 seconds west longitude, and those state inside waters in the upper Barataria Basin north of 29 degrees 26 minutes 00 seconds north latitude and south of 29 degrees 29 minutes 00 seconds north latitude from 89 degrees 50 minutes 00 seconds west longitude westward to 89 degrees 57 minutes 00 seconds west longitude, and that portion of state outside waters seaward a distance of one mile from the inside/outside shrimp line from the eastern shore of Belle Pass at 90 degrees 13 minutes 30 seconds west longitude eastward to the western shore of Caminada Pass at 90 degrees 02 minutes 46.597 seconds west longitude.

Recreational fishing is open in all state inside and outside territorial waters, except in the following areas, where only recreational angling and charter boat angling is allowed: those state inside and outside waters adjacent to Grand Terre Island bounded by the following coordinates: 1) 29 degrees 18 minutes 20 seconds north latitude and 89 degrees 54 minutes 50 seconds west longitude, 2) 29 degrees 17 minutes 10 seconds north latitude and 89 degrees 53 minutes 50 seconds west longitude, 3) 29 degrees 15 minutes 40 seconds north latitude and 89 degrees 56 minutes 00 seconds west longitude, 4) 29 degrees 17 minutes 00 seconds north latitude and 89 degrees 57 minutes 20 seconds west longitude, and those state inside waters in the upper Barataria Basin north of 29 degrees 26 minutes 00 seconds north latitude and south of 29 degrees 29 minutes 00 seconds north latitude from 89 degrees 50 minutes 00 seconds west longitude westward to 89 degrees 57 minutes 00 seconds west longitude, and that portion of state outside waters seaward a distance of one mile from the inside/outside shrimp line from the eastern shore of Belle Pass at 90 degrees 13 minutes 30 seconds west longitude eastward to the western shore of Caminada Pass at 90 degrees 02 minutes 46.597 seconds west longitude.

The Deepwater Horizon drilling rig accident has resulted in a significant release of hydrocarbon pollutants into the waters offshore of southeast Louisiana and these pollutants have the potential to impact fish and other aquatic life in portions of these coastal waters. Efforts have been made and are continuing to be made to minimize the potential threats to fish and other aquatic life.

The commission hereby grants authority to the secretary of the Department of Wildlife and Fisheries to open, close, reopen-reclose, broaden or otherwise modify the areas closed and opened to fishing if biological, environmental and technical data indicate the need to do so, or as needed to effectively implement the provisions herein upon notification to the chairman of the Wildlife and Fisheries Commission.

Robert J. Barham
Secretary

1302#009

DECLARATION OF EMERGENCY

Department of Wildlife and Fisheries
Wildlife and Fisheries Commission

Remote Setting Program

In accordance with the provisions of R.S. 36:609 and R.S. 56:434, as well as the emergency provisions of Section 3 of the Governors' Proclamation No.8 BJ 2013, the Secretary of the Louisiana Department of Wildlife and Fisheries hereby declares a state of emergency on Louisiana's oyster seed grounds Statewide.

On April 20, 2010, the offshore drilling rig Deepwater Horizon exploded and caught fire 42 miles southeast of Venice, Louisiana. The resulting oil spill was the largest in American history, the environmental, ecological, social, and economic impacts of which continue to be assessed. As a result, a significant portion of Louisiana's marine and coastal ecosystems were impacted. While the extent of such impacts are still unknown, ongoing monitoring has shown that expansive portions of Louisiana's public oyster seed grounds have been experiencing significantly lower levels of successful oyster reproduction (oyster spat set) over the last two years. Spat set is a key indicator of oyster reef health as it shows the recruitment of young oysters into the population. It is due to these circumstances, the secretary has issued this Declaration of Emergency.

In response, the Louisiana Department of Wildlife and Fisheries is developing a strategy to augment natural oyster recruitment using hatchery produced oyster larvae and spat. The department has traditionally placed cultch material within the oyster seed grounds to capture natural spat set. Such cultch material will be placed in areas of low spat set

and subsequently be seeded with hatchery-raised oyster larvae set on micro cultch material at the existing Louisiana State University (LSU) oyster hatchery in Grand Isle, Louisiana. Oyster larvae produced by the hatchery will also be remotely set on cultch material in tanks at the LDWF oyster cultch staging area in Buras, Louisiana which will then be placed on the oyster seed grounds. This oyster rehabilitation and oil spill response strategy will hereafter be referred to as the "Remote Setting Program."

This Declaration of Emergency shall take effect immediately and shall expire ninety days from the date of execution, February 5, 2013, unless modified or extended by further order.

Robert Barham
Secretary

1302#033

Rules

RULE

Department of Agriculture and Forestry
Office of Agricultural and Environmental Sciences
Structural Pest Control Commission

Structural Pest Control (LAC 7:XXV.Chapter 1)

In accordance with provisions of the Administrative Procedure Act, R.S. 49:950 et seq., and the enabling statute, R.S. 3:3366, the Department of Agriculture and Forestry, Office of Agriculture and Environmental Sciences, Structural Pest Control Commission has amended regulations to define certain terms; modernize and update all the rules and regulations promulgated by the Structural Pest Control Commission; comply with federal requirements for pesticide container and containment, and comply with state law regarding rule changes and declaratory rulings.

The Structural Pest Control Commission finds that the implementation of these rules and regulations are necessary to define and give clarity to terms used by the structural pest control industry; to provide homeowners and pest control operators a clearer understanding of the requirements for wood destroying insect reports, pesticide containers, and filling and re-filling of pesticide containers; and setting new procedures for changing rules and declaratory rulings.

Title 7
AGRICULTURE AND ANIMALS
Part XXV. Structural Pest Control

Chapter 1. Structural Pest Control Commission

§101. Definitions

A. - B. …

* * *

Containment Pad—a containment structure that:

a. for new and existing containment structures, meets the design, construction materials and capacity requirements of 750 gallons or 100 percent of the capacity of the largest container/equipment used on the pad (whichever is less); and

b. accommodates pesticide spills or leaks in dispensing areas at bulk facilities.

Containment Structure or *Structure*—new and existing structures at bulk facilities that meet the design, construction materials and capacity requirements used to contain spills or leaks from stationary pesticide containers or pesticide dispensing activities.

a. An existing containment structure is a structure for which installation began on or before July 1, 2011.

b. A new containment structure is a structure for which installation began after July 1, 2011 if certain conditions regarding permits, construction and contracts are met.

* * *

Rule—as defined in R.S. 49:951(6).

* * *

Wood Destroying Insect Report (WDIR)—a document approved by the Structural Pest Control Commission issued by a pest control operator only for inspections made to determine the presence of wood destroying insects for acts of sale or refinance of structures. A wood destroying insect report shall not be renewable or issued for any other purpose.

AUTHORITY NOTE: Promulgated in accordance with R.S. 3:3362 and R.S. 3:3366.

HISTORICAL NOTE: Promulgated by the Department of Agriculture, Structural Pest Control Commission, LR 11:323 (April 1985), amended by the Department of Agriculture and Forestry, Structural Pest Control Commission LR 15:954 (November 1989), 17:251 (March 1991), LR 23:855 (July 1997), LR 30:1143 (June 2004), amended by the Department of Agriculture and Forestry, Office of Agriculture and Environmental Sciences, LR 31:26 (January 2005), amended by the Department of Agriculture and Forestry, Structural Pest Control Commission, LR 32:796 (May 2006), repromulgated LR 32:1015 (June 2006), amended LR 33:39 (January 2007), LR 35:204 (February 2009), LR 35:1468 (August 2009), LR 37:272 (January 2011), amended by the Department of Agriculture and Forestry, Office of Agriculture and Environmental Sciences, Structural Pest Control Commission, LR 39:300 (February 2013).

§103. Administration of the Affairs of the Commission; Adoption of Rules and Regulations

A. - P. …

Q. Repealed.

AUTHORITY NOTE: Promulgated in accordance with R.S. 3:3363, R.S. 3:3364 and R.S. 3:3366.

HISTORICAL NOTE: Promulgated by the Department of Agriculture, Structural Pest Control Commission, LR 11:325 (April 1985), amended by the Department of Agriculture and Forestry, Structural Pest Control Commission, LR 20:644 (June 1994), LR 35:204 (February 2009), LR 37:275 (January 2011), amended by the Department of Agriculture and Forestry, Office of Agriculture and Environmental Sciences, Structural Pest Control Commission, LR 39:300 (February 2013).

§111. Certified Fumigation Technician

A. - A.2. …

B. Having met these requirements in §111.A, the applicant would be qualified to take a written test administered by the commission to demonstrate that the person has the necessary knowledge in the phase(s) for which application is made. The minimum score required for successful completion of the examination is 70 percent.

C. - C.1. …

2. the continuing education program shall contain a minimum of six hours of technical training for the phase of fumigation;

3. …

AUTHORITY NOTE: Promulgated in accordance with R.S. 3: 3366 and 3369.

HISTORICAL NOTE: Promulgated by the Department of Agriculture and Forestry, Structural Pest Control Commission, amended LR 17:251 (March 1991), LR 19:1010 (August 1993), LR 37:279 (January 2011), amended by the Department of Agriculture and Forestry, Office of Agriculture and Environmental Sciences, Structural Pest Control Commission, LR 39:300 (February 2013).

§113. Registration of Employees; Duties of Licensee and Registered Employee with Respect to Registration

A. - B.5. …

6. one photograph of the employee; and

B.7. - P.1. …

2. Each continuing education program shall be a minimum of one hour in length per phase.

3. …

AUTHORITY NOTE: Promulgated in accordance with R.S. 3:3366, 3:3368 and R.S. 3:3369.

HISTORICAL NOTE: Promulgated by the Department of Agriculture, Structural Pest Control Commission, LR 11:327 (April 1985), amended by the Department of Agriculture and Forestry, Structural Pest Control Commission, LR 15:956 (November 1989), LR 32:797 (May 2006), repromulgated LR 32:1016 (June 2006), amended LR 35:207 (February 2009), LR 37:279 (January 2011), amended by the Department of Agriculture and Forestry, Office of Agriculture and Environmental Sciences, Structural Pest Control Commission, LR 39:301 (February 2013).

§117. Obligations of the Licensee\Permittee

A. - E.1.c. …

d. a minimum of six hours of technical training for the phase of fumigation.

E.2. - G. …

H. Any person applying pesticides for a fee and the permittee or the primary licensee shall maintain records according to LAC 7:XXV.117.H, at the physical address listed on the place of business permit of all applications of pesticides on a record keeping form or in a format approved by the director of Pesticide and Environmental Programs of the department. These records shall be retained for a period of two years after the date of the pesticide application for ship and commodity fumigation, general pest control and commercial vertebrate control and a period of two years after the expiration of applicable contracts for termite and other wood destroying insect control. The licensee shall make a copy of these records available to any employee of the department for inspection at a reasonable time during normal working hours.

1. - 1.m. …

n. applicator and department I.D. number;

o. contract.

2. - 4.m. …

n. inspection diagram;

o. contract.

I. The licensee shall renew each phase in which he is licensed annually by June 30.

J. The annual fee for licensed pest control operators shall be $5 for each phase in which the pest control operator is licensed.

K. - P. ...

AUTHORITY NOTE: Promulgated in accordance with R.S. R.S. 3:3366 and 3:3368.

HISTORICAL NOTE: Promulgated by the Department of Agriculture, Structural Pest Control Commission, LR 11:327 (April 1985), amended by the Department of Agriculture and Forestry, Structural Pest Control Commission, LR 15:956 (November 1989), LR 21:930 (September 1995), LR 23:855 (July 1997), LR 26:2437 (November 2000), LR 29:1062 (July 2003), amended by the Department of Agriculture and Forestry, Office of Agricultural and Environmental Sciences, Structural Pest Control Commission, LR 30:196 (February 2004), LR 31:2761 (November 2005), LR 35:1468 (August 2009), LR 37:280 (January 2011), LR 39:301 (February 2013).

§121. Wood Destroying Insect Report

A. A wood destroying insect report approved by the commission shall be issued only for inspections made to determine the presence of wood destroying insects for acts of sale or refinance of structures. A wood destroying insect report shall not be renewable or issued for any other purpose.

B. A wood destroying insect report shall be issued by a person who is licensed by the commission in termite control or a certified WDIR technician who is working under the supervision of a person who is licensed by the commission in termite control. The report shall carry a guarantee that the property will be treated without charge should live wood destroying insects covered by the report be found within 90 days from the date of inspection. The presence of frass will be acceptable as evidence of a live infestation of powder post beetles; however, frass shall be exuding or streaming from the holes on the outside of the wood.

B.1. - D.2. …

AUTHORITY NOTE: Promulgated in accordance with R.S. 3:3366 and R.S. 3:3670.

HISTORICAL NOTE: Promulgated by the Department of Agriculture, Structural Pest Control Commission, LR 12:285 (May 1986), amended by the Department of Agriculture and Forestry, Structural Pest Control Commission, LR 23:856 (July 1997), LR 24:631 (April 1998), LR 25:235 (February 1999), LR 25:829 (May 1999), amended by the Department of Agriculture and Forestry, Office of Agriculture and Environmental Sciences, LR 31:26 (January 2005), amended by the Department of Agriculture and Forestry, Structural Pest Control Commission, LR 32:797 (May 2006), repromulgated LR 32:1017 (June 2006), amended LR 37:282 (January 2011), amended by the Department of Agriculture and Forestry, Office of Agriculture and Environmental Sciences, Structural Pest Control Commission, LR 39:301 (February 2013).

§123. Change in Status of Licensee

A. - E. …

F. During the temporary absence of the licensee, the permittee/licensee shall designate another licensee(s), certified in the same phases as the licensee, to perform the duties that require the physical presence of a licensee for a period of time not to exceed 30 days. For the purpose of this Chapter, temporary absence shall mean any absence where the licensee would reasonably be expected to return to his duties. The licensee shall notify the department in writing of any such temporary absence giving the name of the substituting licensee jointly responsible with the licensee, and the dates of the temporary absence.

AUTHORITY NOTE: Promulgated in accordance with R.S. 3:3366 and 3:3368.

HISTORICAL NOTE: Promulgated by the Department of Agriculture, Structural Pest Control Commission, LR 11:328 (April 1985), amended by the Department of Agriculture and Forestry, Structural Pest Control Commission, LR 15:957 (November 1989), LR 37:283 (January 2011), amended by the Department of Agriculture and Forestry, Office of Agriculture and Environmental Sciences, Structural Pest Control Commission, LR 39:301 (February 2013).

§141. Minimum Specifications for Termite Control Work

A. - C.6.b. …

7. Masonry. Apply chemical to all porous areas, visible cracks and accessible voids in foundation walls, piers, chimneys, steps, buttresses, etc., as follows.

a. Treat all cracks in concrete.

C.7.b. - D.1.b. …

2. Bath Traps

a. An access hole of a minimum of 6x8 inches shall be provided during the initial treatment to all bathtub plumbing.

b. If the soil in a trap does not reach the bottom of the slab, the trap shall be filled to within 2 inches of the top of the slab with soil prior to initial treatment. Treat bath trap(s) as required by label and labeling.

2.c - 3.b. …

c. All other openings (plumbing. etc.) shall be treated during the initial treatment as required by label and labeling.

d. Treat all visible cracks in slab.

4. Eliminate direct contact of wood with ground.

a. Remove all cellulose debris, such as scrap wood, vines, etc., from the foundation level of the structure or above the slab.

b. Trench, rod and treat any large stumps or roots that are too sound to be removed, provided that such stumps or roots are at least 12 inches from the foundation timbers. Stumps or roots located less than 12 inches from foundation timbers shall be cut off to provide at least 12 inches clearance.

c. Remove all form boards that are not embedded in concrete.

E. - E.3.d. …

e. Opelousas District—Evangeline, St. Landry, St. Martin, Iberia, St. Mary, Vermilion, and Lafayette.

E.3.f. - G. …

1. Whenever any agent of the department finds that any property is infested with termites, the pest control operator who treated the property or who has a current contract shall retreat within 30 days after receipt of notification from the department.

G.2. - J.3. …

4. Above-ground bait stations shall be used according to their label and labeling when the presence of subterranean termites are detected in the contracted structure and shall be monitored not less than quarterly.

J.5. - K.1. …

2. Combination of liquid spot and bait and baiting systems treatments shall be used according to label and labeling. Above-ground bait stations shall be monitored not less than quarterly.

3. - 8.a. …

b. Above-ground bait stations shall be monitored not less than quarterly.

K.9. - M.5.d. …

e. Opelousas District—Evangeline, St. Landry, St. Martin, Iberia, St. Mary, Vermilion, and Lafayette;

5.f. - 9. …

AUTHORITY NOTE: Promulgated in accordance with R.S. 3:3366.

HISTORICAL NOTE: Promulgated by the Department of Agriculture, Structural Pest Control Commission, LR 11:330 (April 1985), amended by the Department of Agriculture and Forestry, Structural Pest Control Commission, LR 15:958 (November 1989), LR 20:644 (June 1994), LR 21:931 (September 1995), LR 23:1285 (October 1997), LR 25:235 (February 1999), LR 25:1620 (September 1999), LR 26:2437 (November 2000), LR 27:1180 (August 2001), LR 29:1063 (July 2003), LR 30:1145 (June 2004), repromulgated LR 30:1614 (August 2004), amended LR 35:207 (February 2009), LR 35:1469 (August 2009), repromulgated LR 35:1872 (September 2009), amended, LR 37:286 (January 2011), amended by the Department of Agriculture and Forestry, Office of Agriculture and Environmental Sciences, Structural Pest Control Commission, LR 39:301 (February 2013).

§145. Wood-Destroying Beetles

A. - A.1. …

a. Powder post beetle frass shall be exuding or streaming from the holes on the outside of the wood or live larvae or pupae are found in the wood members.

2. - 2.a. …

AUTHORITY NOTE: Promulgated in accordance with R.S. 3:3366.

HISTORICAL NOTE: Promulgated by the Department of Agriculture, Structural Pest Control Commission, LR 11:332 (April 1985), amended LR 35:1470 (August 2009), LR 37:292 (January 2011), amended by the Department of Agriculture and Forestry, Office of Agriculture and Environmental Sciences, Structural Pest Control Commission, LR 39:302 (February 2013).

§151. General Requirements for Pesticide Waste

A. All permittees, licensees, or registered persons shall implement a containment system for reuse or apply a pesticide waste immediately to a site of application per label and labeling.

B. Handling Spills by Applicators

1. All spills of more than 1 gallon liquid or 4 pounds dry weight shall be reported to the director by the applicator, primary licensee or permitee within 24 hours by telephone and by written notice within 3 days.

2. The permitee is responsible for the cost of cleanups resulting from pesticide spills in their operations.

AUTHORITY NOTE: Promulgated in accordance with R.S. 3:3366.

HISTORICAL NOTE: Promulgated by the Department of Agriculture, Structural Pest Control Commission, LR 12:285 (May 1986), amended by the Department of Agriculture and Forestry, Structural Pest Control Commission, LR 37:294 (January 2011), amended by the Department of Agriculture and Forestry, Office of Agriculture and Environmental Sciences, Structural Pest Control Commission, LR 39:302 (February 2013).

§153. Handling of Pesticide Containers by Structural Pest Control Operators

A. Storage Areas for Full or Partially Full Pesticides Containers

1. Pesticide containers shall be stored in a secure enclosure.

2. - 3. …

B. Transportation of full or partially full pesticide containers shall be secure and not accessible by the general public.

C. - D.1.b. Repealed.

AUTHORITY NOTE: Promulgated in accordance with R.S. 3:3366.

HISTORICAL NOTE: Promulgated by the Department of Agriculture, Structural Pest Control Commission, LR 12:285 (May 1986), amended by the Department of Agriculture and Forestry, Structural Pest Control Commission, LR 37:294 (January 2011), amended by the Department of Agriculture and Forestry, Office of Agriculture and Environmental Sciences, Structural Pest Control Commission, LR 39:302 (February 2013).

§155. Rinsate from Pesticide containers

A. Pesticide containers shall be cleaned and disposed of according to the product label.

B. Pesticide containers, ready for disposal, shall be stored in a secured area and shall be kept for no more than 90 days or 180 days if held for recycling.

C. Rinsate from pesticide container cleaning shall be used in the following manner:

1. in subsequent applications of the pesticide; or

2. placed in a rinsate collection system dedicated to that pesticide and used according to the label and labeling and shall be removed from the system in less than 30 days after deposit therein; or

3. disposed in a permitted waste facility.

AUTHORITY NOTE: Promulgated in accordance with R.S. 3:3366.

HISTORICAL NOTE: Promulgated by the Department of Agriculture, Structural Pest Control Commission, LR 12:285 (May 1986), amended by the Department of Agriculture and Forestry, Structural Pest Control Commission, LR 37:294 (January 2011), amended by the Department of Agriculture and Forestry, Office of Agriculture and Environmental Sciences, Structural Pest Control Commission, LR 39:302 (February 2013).

§157. Containment Structures

A. Containment structures shall meet all of the following requirements:

1. shall be constructed of steel, reinforced concrete or other rigid material capable of withstanding the full hydrostatic head and load of any substances, equipment and appurtenances placed on the structure;

2. shall be compatible with the pesticides stored within the structure;

3. shall be liquid-tight with cracks, seams and joints sealed;

4. shall not be constructed of natural earthen material, unfired clay and asphalt;

5. shall protect appurtenances and containers against damage from personnel and moving equipment;

6. shall seal appurtenances, discharge outlets or drains through the base or wall of existing containment structures, except direct connections between containment structures;

7. shall not configure appurtenances, discharge outlets or drains through the base or wall of new containment structures, except direct connections between containment structures;

8. shall control stormwater in all containment structures by constructing with sufficient freeboard to contain precipitation and prevent water and other liquids from seeping into or flowing onto them from adjacent land or structures.

B. Containment structures for new and existing secondary containment shall meet the following requirements.

1. Liquid pesticide stationary containers shall be anchored or elevated to prevent flotation.

2. Dry pesticide stationary containers shall:

a. be protected from wind and precipitation; and

b. be on pallets or raised concrete; and

c. have a floor that extends completely beneath the pallets or raised concrete platforms; and

d. be enclosed by a curb a minimum of 6 inches high that extends at least 2 feet beyond the perimeter of the container.

C. - E. Repealed.

AUTHORITY NOTE: Promulgated in accordance with R.S. 3:3366.

HISTORICAL NOTE: Promulgated by the Department of Agriculture, Structural Pest Control Commission, LR 12:285 (May 1986), amended by the Department of Agriculture and Forestry, Structural Pest Control Commission, LR 37:294 (January 2011), amended by the Department of Agriculture and Forestry, Office of Agriculture and Environmental Sciences, Structural Pest Control Commission, LR 39:303 (February 2013).

§159. Containment Pads

A. Existing containment pads shall:

1. intercept leaks and spills; and

2. have enough surface area to extend under containers on it; and

3. accommodate at least the portion of the vehicle where the hose or device couples to it, for transport vehicles delivering pesticide; and

4. allow for removal/recovery of spilled, leaked or discharged material and rainfall; and

5. have no automatic pumps without overflow cutoffs.

B. New containment pads to be designed and constructed shall:

1. intercept leaks and spills; and

2. have enough surface area to extend under containers on it; and

3. accommodate at least the portion of the vehicle where the hose or device couples to it, for transport vehicles delivering pesticide; and

4. allow for removal/recovery of spilled, leaked or discharged material and rainfall; and

5. have no automatic pumps without overflow cutoffs; and

6. have their surface sloped toward an area where liquids can be collected for removal.

AUTHORITY NOTE: Promulgated in accordance with R.S. 3:3366.

HISTORICAL NOTE: Promulgated by the Department of Agriculture and Forestry, Office of Agriculture and Environmental Sciences, Structural Pest Control Commission, LR 39:303 (February 2013).

§165. Requests for Adoption, Amendment, or Repeal of a Rule

A. Any interested person may, pursuant to R.S. 49:953(C), request the commission to adopt, amend, or repeal a rule (rule change) that the commission has the authority to make.

B. A request for a rule change shall be in writing and shall contain the following information:

1. a draft of the proposed wording of the requested rule change or a statement detailing the content of the requested rule change;

2. the name, address, telephone number, fax number and e-mail address of the requesting party.

C. The request for a rule change shall be addressed to the commission and shall be mailed or delivered to 5825 Florida Boulevard, Baton Rouge, LA 70806.

D. The commission shall consider the request as follows.

1. A request for rule change shall be considered by the commission within a reasonable time, not to exceed 90 days.

a. Notice of the meeting at which the request is to be considered shall be provided to the person submitting the request.

b. Failure of the requesting party to attend the meeting for purposes of discussing the proposed rule change may be cause for the request to be denied by the commission.

c. The request, with the consent of the requesting party, may be taken under consideration or action deferred pending further information. If the matter is taken under

consideration or action is deferred then it will be taken up again at the next regularly scheduled meeting of the commission or at a special meeting.

E. Any decision by the commission shall be in writing and shall state the reasons for the denial or action. Such notice may be delivered by hand, mail, electronically or by any other means reasonably assured to provide notice to the requesting party.

AUTHORITY NOTE: Promulgated in accordance with R.S. 3:3366 and R.S. 49:953(C).

HISTORICAL NOTE: Promulgated by the Department of Agriculture and Forestry, Office of Agricultural and Environmental Sciences, Structural Pest Control Commission, LR 39:303 (February 2013).

§167. Procedure for Declaratory Orders and Rulings

A. This rule provides for the filing and prompt disposition of requests for declaratory orders and rulings as to the applicability of any statutory provision or as to the applicability of any rule or order of the commission, as required by R.S. 49:962 and 49:963(D).

B. A request for a declaratory order or ruling shall be in writing and shall contain the following information:

1. a citation to the specific statutory provision, rule or order that will be the subject of the declaratory order or ruling;

2. a concise statement of why the declaratory order or ruling is being requested;

3. a list of all persons that the requesting party may call to testify and a list of all documents that may be submitted as evidence, if a hearing is called to take evidence;

4. the name, address, telephone number, fax number and e-mail address of the requesting party, either printed or written in legible form.

C. The request for a declaratory order or ruling shall be addressed to the commission and shall be mailed or delivered to 5825 Florida Boulevard, Baton Rouge, LA 70806.

D. The commission shall consider the request as follows.

1. The request shall be considered by the commission within a reasonable time, not to exceed 90 days.

2. Notice of the meeting at which the request is to be considered shall be provided to the person submitting the request.

E. The commission's decision shall be sent to the requesting party either by certified mail, return receipt requested; hand delivery; or commercial courier.

F. Failure of the requesting party, after notice, to attend any hearing or meeting regarding the request may be cause for the request to be denied.

AUTHORITY NOTE: Promulgated in accordance with R.S. 3:3366, R.S. 49:962 and R.S. 49:963(D).

HISTORICAL NOTE: Promulgated by the Department of Agriculture and Forestry, Office of Agricultural and Environmental Sciences, Structural Pest Control Commission, LR 39:304 (February 2013).

Mike Strain, DVM
Commissioner

1302#049

RULE

Board of Elementary and Secondary Education

Bulletin 111—The Louisiana School, District and State Accountability System—School Performance Categories (LAC 28:LXXXIII.1102)

In accordance with R.S. 49:950 et seq., the Administrative Procedure Act, the Board of Elementary and Secondary Education has amended *Bulletin 111: The Louisiana School, District and State Accountability System* §1102, Academic Watch and Academically Unacceptable Schools (AUS). The current AUS bar is 75 out of 200. Under the new policy, the AUS bar is being changed to 50 out of 150. Also, the language in the policy related to academic watch schools was deleted as this category no longer exists. These changes were made to align these policies with the new accountability formula which rescaled the performance score range so that 100 approximates 100 percent proficiency for all students and a score of 150 represents all students demonstrating advanced.

Title 28
EDUCATION
Part LXXXIII. Bulletin 111—The Louisiana School, District and State Accountability System
Chapter 11. School Performance Categories
§1102. Academically Unacceptable Schools (AUS)

A. Schools with a baseline SPS below 50.0 shall be identified as an academically unacceptable school (AUS).

AUTHORITY NOTE: Promulgated in accordance with R.S. 17:10.1.

HISTORICAL NOTE: Promulgated by the Board of Elementary and Secondary Education, LR 37:2121 (July 2011), amended LR 39:304 (February 2013).

Heather Cope
Executive Director

1302#022

RULE

Board of Elementary and Secondary Education

Bulletin 111—The Louisiana School, District and State Accountability System—School Performance Score Component (LAC 28:LXXXIII.301, 409, 517, 612 and 613)

In accordance with R.S. 49:950 et seq., the Administrative Procedure Act, the Board of Elementary and Secondary Education has amended *Bulletin 111: The Louisiana School, District and State Accountability System* §301, School Performance Score Goal, §409, Calculating a 9-12 Assessment Index, §517, Inclusion of Students, §712, Calculating a Cohort Graduation Index, and §613, Calculating a Graduation Index. The revision to §301 doubles the subgroup bonus for special education students to further incentivize growth. Section 409 was revised to allow students who took an end-of-course (EOC) test in middle school and did not achieve proficiency to retake the EOC

test in high school. Section 409 will also allow ACT scores to count through March of the senior year. Previous policy had a deadline of March of the junior year. The revision to §517 changes the definition of a full academic year and the revision to §612 is a change to the formula used to calculate the cohort graduation rate. Revisions to §613 allow for a transition of one year to include points for seniors in 2011-2012 who graduate with a diploma endorsement and also increases the points available for fifth-year graduates demonstrating the highest levels of proficiency.

Title 28
EDUCATION
Part LXXXIII. Bulletin 111—The Louisiana School, District and State Accountability System

Chapter 3. School Performance Score Component

§301. School Performance Score Goal

A. - C.4.b. …

D. Bonus Points

1. The school performance score will also be affected by the bonus points earned from growth calculated for the non-proficient student subgroup (i.e., super subgroup). To be eligible for bonus points, the school must have:

a. at least 10 students in the non-proficient subgroup, as identified for subgroup membership based on prior year assessment scores; and

b. a minimum of 30 percent of the students in the non-proficient subgroup meet or exceed their expected growth, as determined by the value-added model for students in grades K-8 and as determined by the ACT series for students in grades 9-12;

c. if 1a and 1b are met, then the number and the percent of students will be multiplied by 0.1, and the higher of the two products will be used to assign bonus points. For students who are identified as special education, the multiplier will be 0.2.

2. - 3.a. …

AUTHORITY NOTE: Promulgated in accordance with R.S. 17:10.1.

HISTORICAL NOTE: Promulgated by the Board of Elementary and Secondary Education, LR 29:2737 (December 2003), amended LR 31:1512 (July 2005), LR 32:1017 (June 2006), LR 32:2034, 2035 (November 2006), LR 33:424 (March 2007), LR 33:2349 (November 2007), LR 33:2593 (December 2007), LR 34:430 (March 2008), LR 35:639 (April 2009), LR 36:1987 (September 2010),), LR 38:3105 (December 2012), LR 39:305 (February 2013).

Chapter 4. Assessment, and Dropout/Credit Accumulation Index Calculations

§409. Calculating a 9-12 Assessment Index

A. All operational end-of-course (EOC) tests will be used in the calculation of the EOC assessment index.

1. All subjects will be weighted equally.

2. The EOC performance level will be used in the calculation of the EOC assessment index as described in the chart below.

EOC Performance Level	Index Points
Excellent	150
Good	100
Fair	0
Needs Improvement	0

3. Algebra I and English II EOC proficient test scores of "good" or "excellent" earned by students at a middle school will be included in the SPS calculations of the high school to which the student transfers. The scores will be included in the accountability cycle that corresponds with the students' first year of high school. Middle schools will earn incentive points for all EOC test passing scores the same year in which the test was administered.

a. Incentive points will be awarded as follows:

i. excellent = 50;

ii. good = 25.

4. Algebra I and English II EOC test scores considered "not proficient" (needs improvement, fair) will not be transferred, or banked, to the high school. Students will retake the test at the high school, and the first administration of the test at the high school will be used in the calculation of the assessment index the same year in which it was earned.

B. The ACT composite score will be used in the calculation of the ACT assessment index as described in the chart below. To the extent practicable, a student's highest earned score for any ACT administration shall be used in the calculation.

ACT Composite	Index Pts
0-17	0
18	100
19	102.8
20	105.6
21	108.4
22	111.2
23	114
24	116.8
25	119.6
26	122.4
27	125.2
28	128
29	130.8
30	133.6
31	136.4
32	139.2
33	142
34	144.8
35	147.6
36	150.4

AUTHORITY NOTE: Promulgated in accordance with R.S. 17:10.1.

HISTORICAL NOTE: Promulgated by the Board of Elementary and Secondary Education, LR 32:1021 (June 2006), amended LR 33:252 (February 2007), LR 36:1989 (September 2010), LR 37:2118 (July 2011), repromulgated LR 37:2382 (August 2011), LR 37:3200 (November 2011), LR 38:1212 (May 2012), LR 38:2357 (September 2012), LR 38:3106 (December 2012), LR 39:305 (February 2013).

Chapter 5. Inclusion in Accountability

§517. Inclusion of Students

A. The test score of every student who is enrolled in any school in an LEA on October 1 of the academic year and who is eligible to take a test at a given school within the same LEA shall be included in the LEA's district performance score (DPS). The score of every student that will count in the DPS will be counted at the school where the student was enrolled on February 1 for SPS and

subgroup AYP. For EOC tests taken in December, the scores will count in the SPS at the school where students are enrolled for the test.

AUTHORITY NOTE: Promulgated in accordance with R.S. 17:10.1.

HISTORICAL NOTE: Promulgated by the Board of Elementary and Secondary Education, LR 29:2741 (December 2003), amended LR 31:1512 (July 2005), LR 31:2422 (October 2005), LR 31:2764 (November 2005), LR 33:2594 (December 2007), LR 38:3107 (December 2012), LR 39:305 (February 2013).

Chapter 6. Graduation Cohort, Index, and Rate

§612. Calculating a Cohort Graduation Index

A. To calculate the cohort graduation index, the following formulas shall be used.

Cohort Graduation Rate	Formula Used
0 percent to 60 percent	CGR × 1.166667
61 percent to 100 percent	(CGR × 2) - 50

AUTHORITY NOTE: Promulgated in accordance with R.S. 17:10.1.

HISTORICAL NOTE: Promulgated by the Board of Elementary and Secondary Education, LR 39:306 (February 2013).

§613. Calculating a Graduation Index

A. Points shall be assigned for each member of a cohort during the cohort's fourth year of high school according to the following table.

Student Result	Points
HS Diploma plus AP score of at least 3 OR IB Score of at least 4	150
Academic OR Career/Technical Endorsement (For 2012-13 only)	135
TOPS Opportunity Award (For 2012-13 only)	120
BESE-Approved Industry Based Certification OR Dual Enrollment OR AP score of 1 or 2 OR IB score of 1, 2, or 3 if the corresponding course is passed.	110
Regular HS Diploma	100
GED	25
Non-graduate without GED	0
5th Year Graduate plus AP score of at least 3 OR IB Score of at least 4	150
5th Year Graduates	75

B. The graduation index of a school shall be the average number of points earned by cohort members.

C. For each student who graduates in the fifth year, 75 points shall be awarded to the graduation index. An additional 75 points shall be awarded to fifth year graduates who also have a score of at least 3 on an AP test or a score of at least 4 on an IB test.

a. The diploma must be earned no later than the third administration of the summer retest following the fourth year of high school of the students' cohort. For example, a student who finishes the fourth year of high school in 2012 must complete the assessment requirements before or during the 2014 summer test administration.

b. When related to awarding fifth-year graduate points, the enrollment must be continuous and consist of at least 45 calendar days.

D. To insure the accuracy of data used to calculate the graduation index, the calculation shall lag one year behind the collection of the data. (The index earned by the graduating class of 2012 will be used for 2013 accountability calculations.)

AUTHORITY NOTE: Promulgated in accordance with R.S. 17:10.1.

HISTORICAL NOTE: Promulgated by the Board of Elementary and Secondary Education, LR 32:1025 (June 2006), amended LR 33:2031 (October 2007), LR 33:2594 (December 2007), LR 35:1472 (August 2009), LR 36:1769 (August 2010), repromulgated LR 36:1994 (September 2010), LR 36:2243 (October 2010), LR 37:3201 (November 2011), LR 38:1391 (June 2012), LR 38:3109 (December 2012), LR 39:306 (February 2013).

Heather Cope
Executive Director

1302#021

RULE

Board of Elementary and Secondary Education

Bulletin 741 (Nonpublic)—Louisiana Handbook for Nonpublic School Administrators—Programs of Study
(LAC 28:LXXIX.107, 109, 110, 111, and 113)

In accordance with R.S. 49:950 et seq., the Administrative Procedure Act, the Board of Elementary and Secondary Education has amended *Bulletin 741 (Nonpublic)—Louisiana Handbook for Nonpublic School Administrators—Programs of Study*: §107, School Approval; §109, Initial Classification; §110, Initial Classification for New Schools; §111, Re-Applying for State Approval; and §113, School Self-Evaluation. The policy revision revises the framework by which nonpublic schools are approved by the Board of Elementary and Secondary Education based upon significant input from external stakeholders who might be affected by the revisions.

Title 28
EDUCATION
Part LXXIX. Bulletin 741 (Nonpublic)—Louisiana Handbook for Nonpublic School Administrators—Programs of Study

Chapter 1. Operation and Administration

§107. School Approval

A. - D. …

E. Classification Categories. Schools shall be classified according to the following categories.

1. Approved (A)—school meets all standards specified in Standards For Approval of Nonpublic Schools. There shall be two types of approved schools.

a. Accredited Approved School—school is:

i. currently accredited by the Southern Association of Colleges and Schools (SACS); or

ii. a member of the National Association of Independent Schools (NAIS); and

iii. the school meets all other criteria established by this bulletin for BESE approval;

iv. the LDE may also accept accreditation from other school accreditation agencies, but may require the submission of additional information from the school so as to ensure consistent quality.

b. Non-accredited Approved School—school is not currently accredited by SACS or a member of NAIS, but has met all criteria established by this bulletin for approval.

2. Registered—school is not accredited by SACS or NAIS and has not met the criteria established by the department for approval, or does not wish to seek state approval.

F. Accredited schools shall be approved by BESE for the duration of such accreditation, up to five years. BESE approval shall be reviewed in the school year following the renewal of such accreditation. Each accredited, approved school shall annually demonstrate to the LDE that the school meets the health, safety, and welfare requirements as established in this bulletin. Additionally, each accredited, approved high school shall annually demonstrate to the LDE that it is providing an appropriate four year course of study.

G The LDE shall conduct an annual review of non-accredited schools seeking approval, and shall recommend to BESE whether such approval should be granted. Any such LDE review may include site visits, and shall include a review of the following:

1. academic quality, including:
   a. the school's purpose and direction;
   b. the school's leadership;
   c. the school's instructional practices;
   d. the school's curriculum; and
2. student health, safety, and welfare, pursuant to the guidelines established in this bulletin.

H. The Department of Education shall submit to the SBESE a yearly report recommending the classification status of the nonpublic schools in accordance with the nonpublic school standards.

I. After the annual school reports are submitted by the state Department of Education to the state Board of Elementary and Secondary Education (SBESE) for approval, all nonpublic schools seeking to change their classification category must submit their request to the SBESE. BESE may, upon the recommendation of the department that standards have been met for the desired approval status, change the classification of a nonpublic school.

J. BESE may revoke any nonpublic school's approval at any time if it determines that the health, safety, or welfare of students has been jeopardized.

AUTHORITY NOTE: Promulgated in accordance with R.S. 17:6(A)(10), (11), (15), R.S. 17:7(6), R.S. 17:10, R.S. 17:22(6), R.S. 17:391.1-391.10, and R.S. 17:411.

HISTORICAL NOTE: Promulgated by the Board of Elementary and Secondary Education, LR 29:2342 (November 2003), amended LR 31:3073 (December 2005), LR 36:2847 (December 2010), LR 37:2145 (July 2011), LR 39:306 (February 2013).

§109. Initial Classification

Repealed.

AUTHORITY NOTE: Promulgated in accordance with R.S. 17:6 (A)(10), (11), (15), R.S. 17:7(6), R.S. 17:10, R.S. 17:22(6), R.S. 17:391.1-391.10, R.S. 17:411.

HISTORICAL NOTE: Promulgated by the Board of Elementary and Secondary Education, LR 29:2343 (November 2003), amended LR 31:3073 (December 2005), LR 32:1416 (August 2006), LR 32:2237 (December 2006), repealed LR 39:307 (February 2013).

§110. Initial Classification for New Schools

Repealed.

AUTHORITY NOTE: Promulgated in accordance with R.S. 17:6 (A)(10), (11), (15); R.S. 17:7(6); R.S. 17:10; R.S. 17:22(6); R.S. 17:391.1-391.10; R.S. 17:411.

HISTORICAL NOTE: Promulgated by the Board of Elementary and Secondary Education, LR 32:2237 (December 2006), repealed LR 39:307 (February 2013).

§111. Re-Applying for State Approval

Repealed.

AUTHORITY NOTE: Promulgated in accordance with R.S. 17:6 (A)(10), (11), (15); R.S. 17:7(6); R.S. 17:10; R.S. 17:22(6); R.S. 17:391.1-391.10; R.S. 17:411.

HISTORICAL NOTE: Promulgated by the Board of Elementary and Secondary Education, LR 29:2343 (November 2003), amended LR 31:3073 (December 2005), repealed LR 39:307 (February 2013).

§113. School Self-Evaluation

Repealed.

AUTHORITY NOTE: Promulgated in accordance with R.S. 17:6 (A)(10), (11), (15); R.S. 17:7(6); R.S. 17:10; R.S. 17:22(6); R.S. 17:391.1-391.10; R.S. 17:411.

HISTORICAL NOTE: Promulgated by the Board of Elementary and Secondary Education, LR 29:2343 (November 2003), amended LR 31:3073 (December 2005), repealed LR 39:307 (February 2013).

Heather Cope
Executive Director

1302#020

RULE

Board of Elementary and Secondary Education

Technical Revisions and Updates
(LAC 28:I.501)

Editor's Note: This Section is being repromulgated to correct citation errors. The original Rule promulgation can be viewed on pages 3149-3156 of the December 20, 2012 *Louisiana Register*.

In accordance with R.S. 49:950 et seq., the Administrative Procedure Act, the Board of Elementary and Secondary Education has amended the *Louisiana Administrative Code*, Title 28, Part I. These revisions bring the "BESE Code" into alignment with current law and policy. All of the amendments are technical, rather than substantive, and are necessary for a range of reasons, including:

- legislation enacted into law since 2008;
- amendments to statutes that serve as the basis for policies within the Code;
- changes in numbers assigned to statutes that are cited within authority notes at the end of each Section;
- shifts in the geographical coverage of BESE districts prompted by the 2010 Census and subsequent redistricting process;
- duplication of policies in law, which supersedes BESE's authority and to which the code should defer;
- inconsistencies within the Code itself caused by changes to rules since 2008 that were not applied throughout the document; and
- edits to terminology and grammar.

Title 28
EDUCATION
Part I. Board of Elementary and Secondary Education
Chapter 5. Organization
§501. Committees

A. - B.1. ...
a. Primary areas of responsibility (AOR):
i. - iii.(a). ...
iv. nonpublic school management;
(a). - (b). ...
b. Issues included on "as needed" basis in AOR:
1.b.i. - 2. ...
a. Primary areas of responsibility (AOR):
2.a.i. - 3. ...
a. Primary areas of responsibility (AOR):
i. ...
(a). certification revocations;
(b). records reviews for:
(i). certification denials;
(ii). revocations due to felony convictions;
(iii). revocations due to submission of fraudulent documents;
(c). policy concepts;
B.3.a.ii. - B.3.a.iii.(a). …
4. - 4.b.i. ...

AUTHORITY NOTE: Promulgated in accordance with R.S. 17:6(A)(10).

HISTORICAL NOTE: Promulgated by the Board of Elementary and Secondary Education, LR 34:415 (March 2008), amended LR 35:223 (February 2009), LR 35:1874 (September 2009), amended LR 36:2851 (December 2010), LR 37:2139 (July 2011), LR 38:3152 (December 2012), repromulgated LR 39:308 (February 2013).

Heather Cope
Executive Director

1302#010

RULE

Student Financial Assistance Commission
Office of Student Financial Assistance

TOPS GPA Calculation (LAC 28:IV.301)

The Louisiana Student Financial Assistance Commission (LASFAC) has amended its Scholarship/Grant rules (R.S. 17:3021-3025, R.S. 3041.10-3041.15, R.S. 17:3042.1, R.S. 17:3048.1, R.S. 17:3048.5 and R.S. 17:3048.6). (SG13142R)

Title 28
EDUCATION
Part IV. Student Financial Assistance—Higher Education Scholarship and Grant Programs
Chapter 3. Definitions
§301. Definitions

A. Words and terms not otherwise defined in this Chapter shall have the meanings ascribed to such words and terms in this Section. Where the masculine is used in these rules, it includes the feminine, and vice versa; where the singular is used, it includes the plural, and vice versa.

* * *

TOPS Cumulative High School Grade Point Average—

a. effective for high school graduates beginning with academic year (high school) 2002-2003, the grade point average calculated by LOSFA including only the grades achieved in those courses that were used to satisfy core curriculum requirements. In the event a student has received credit for more than 16.5 hours of courses that are included in the core curriculum, the TOPS cumulative high school grade point average shall be calculated by using the course in each core curriculum category for which the student received the highest grade. For example, if a student has taken more than one advanced mathematics course, the cumulative grade point average shall be determined by using only the course in which the student has received the highest grade;

b. effective for high school graduates beginning with academic year (high school) 2002-2003, the grade point average for students qualifying for a performance award using a minimum ACT score of 24 and a minimum grade point average of 3.00 must include at least 10 units of honors curriculum courses (see §703.A.5.f.ii);

c. effective for high school graduates beginning with academic year (high school) 2007-2008, the grade point average shall be calculated on 17.5 hours of units of courses that are used to satisfy the core curriculum;

d. effective for high school graduates beginning with academic year (high school) 2013-2014, the grade point average shall be calculated on 19.0 hours of units of courses that are used to satisfy the core curriculum;

e. for those high schools that utilize other than a 4.00 scale, all grade values shall be converted to a 4.00 scale utilizing the following formula:

$$\frac{\textit{Quality Points Awarded for the Course}}{\textit{Maximum Points Possible for the Course}} = \frac{X\ \textit{(Converted Quality Points)}}{4.00\ \textit{(Maximum Scale)}}$$

For example, if a school awards a maximum of 5 points for honors courses, the school must use the following formula to convert an honors course grade of "C":

$$\frac{3.00}{5.00} = \frac{X}{4.00}$$

By cross multiplying,

$$5X = 12;\ X = 2.40$$

Quality points = Credit for course multiplied by the value assigned to the letter grade.

* * *

AUTHORITY NOTE: Promulgated in accordance with R.S. 17:3021-3025, R.S. 17:3042.1 and R.S. 17:3048.1.

HISTORICAL NOTE: Promulgated by the Student Financial Assistance Commission, Office of Student Financial Assistance, LR 22:338 (May 1996), repromulgated LR 24:632 (April 1998), amended LR 24:1898 (October 1998), LR 24:2237 (December 1998), LR 25:256 (February 1999), LR 25:654 (April 1999), LR 25:1458 and 1460 (August 1999), LR 25:1794 (October 1999), LR 26:65 (January 2000), LR 26:688 (April 2000), LR 26:1262 (June 2000), LR 26:1601 (August 2000), LR 26:1993, 1999 (September 2000), LR 26:2268 (October 2000), LR 26:2752 (December 2000), LR 27:36 (January 2001), LR 27:284 (March 2001), LR 27:1219 (August 2001), LR 27:1840 (November 2001), LR 27:1875 (November 2001), LR 28:45 (January 2002), LR 28:446 (March 2002), LR 28:772 (April 2002), LR 28:2330, 2331 (November 2002), LR 29:555 (April 2003), LR 29:879 (June 2003), LR 30:1159 (June 2004), LR 30:2015 (September 2004), LR 31:36 (January 2005), LR 31:3112 (December 2005), LR 33:86 (January

2007), LR 33:439 (March 2007), LR 33:1339 (July 2007), LR 33:2612 (December 2007), LR 34:234 (February 2008), LR 34:1388 (July 2008), LR 34:1884 (September 2008), LR 35:228 (February 2009), LR 35:1489 (August 2009), LR 35:1490 (August 2009), LR 36:311 (February 2010), LR 36:490 (March 2010), LR 36:2854 (December 2010), LR 37:1561 (June 2011), LR 37:1562 (June 2011), LR 39:308 (February 2013).

George Badge Eldredge
General Counsel

1302#011

RULE

Office of the Governor
Division of Administration
Office of State Purchasing

Master Agreements; Clauses; Approval (LAC 34:I.5517)

In accordance with provisions of the Administrative Procedure Act, R.S. 49:950 et seq., and R.S. 39:200(F), the Office of the Governor, Division of Administration, Office of State Purchasing, has adopted §5517, Master Agreements; Clauses; Approval, to establish a process for the review and use of data processing master agreements.

Title 34
GOVERNMENT CONTRACTS, PROCUREMENT AND PROPERTY CONTROL
Part I. Purchasing
Subpart 3. Equipment-Lease-Purchase Program
Chapter 55. Procedures for Information Technology Hardware, Software, Software Maintenance and Support Services, and Hardware Maintenance

§5517. Master Agreements; Clauses; Approval

A. R.S. 39:198(E) authorizes the state director of purchasing to enter into master agreements with vendors with which the state conducts substantial business over a period of time and sets forth the uses to which such master agreements may be put. Master agreements may be approved in accordance with the following requirements.

B. Master agreements submitted for approval shall, at a minimum, contain the following provisions:

1. any contract based on the master agreement shall be governed by the laws of the state of Louisiana;

2. the unilateral right of the state to order in writing changes in the work within the general scope of the contract in any one or more of the following:

a. drawings, designs, or specifications, if the supplies to be furnished are to be specially manufactured for the state in accordance therewith;

b. method of shipment or packing; or

c. place of delivery;

3. the unilateral right of the state to order in writing temporary stopping of the work or delaying of performance;

4. variations between estimated quantities of work in a contract and actual quantities;

5. liquidated damages as appropriate;

6. specified excuses for delay or nonperformance;

7. termination of the contract for vendor's default;

8. termination of the contract in whole or in part for the convenience of the state;

9. the vendor shall agree to indemnify the state and hold the state harmless without limitation of liability;

10. the vendor shall agree to secure and maintain insurance in such types and amounts as approved by the director of state purchasing;

11. the vendor agrees continuation of contracts in effect during more than one fiscal year is contingent upon the appropriation of funds to fulfill the requirements of the contract by the legislature. If the legislature fails to appropriate sufficient monies to provide for the continuation of the contract or if such appropriation is reduced by the veto of the governor or by any means provided in the appropriations act or Title 39 of the *Louisiana Revised Statutes* of 1950 to prevent the total appropriation for the year from exceeding revenues for that year, or for any other lawful purpose, and the effect of such reduction is to provide insufficient monies for the continuation of the contract, the contract shall terminate on the date of the beginning of the first fiscal year for which funds are not appropriated;

12. any changes mandated by state or federal law, whether legislative or judicial, will be incorporated into the master agreement; however, if such a change is not acceptable to either party, the affected term or terms of the contract shall be renegotiated and, if agreement cannot be reached, shall be stricken from the contract.

C. The director of purchasing may approve a master agreement only after the agreement has been negotiated with the vendor by the procurement support team.

D. In the event any vendor fails to fulfill or comply with the terms of any contract, the director of purchasing may rescind approval of the vendor's master agreement.

AUTHORITY NOTE: Promulgated in accordance with R.S. 39:200(F).

HISTORICAL NOTE: Promulgated by the Office of the Governor, Division of Administration, Office of State Purchasing, LR 39:309 (February 2013).

Jan B. Cassidy
Assistant Commissioner

1302#037

RULE

Office of the Governor
Division of Administration
Office of State Purchasing

Procurement of Consulting Services
as Related Services (LAC 34:I.5519)

In accordance with provisions of the Administrative Procedure Act, R.S. 49:950 et seq., and R.S. 39:197(1), the Office of the Governor, Division of Administration, Office of State Purchasing, has adopted §5519, Procurement of

Consulting Services as Related Services, to allow for the inclusion of certain services in the procurement of data processing hardware or software.

Title 34
GOVERNMENT CONTRACTS, PROCUREMENT AND PROPERTY CONTROL
Part I. Purchasing
Subpart 3. Equipment-Lease-Purchase Program
Chapter 55. Procedures for Information Technology Hardware, Software, Software Maintenance and Support Services, and Hardware Maintenance
§5519. Procurement of Consulting Services as Related Services

A. R.S. 39:197(1) allows for the procurement of consulting services, as otherwise subject to the provisions of Chapter 16 of Title 39 of the *Louisiana Revised Statutes*, which services are ancillary to the procurement of data processing hardware or software. Such ancillary consulting services are to be considered as "related services" authorized to be procured in accordance with the provisions of Chapter 17 of Title 39 of the Louisiana Revised Statutes only when the services are included as a part of the acquisition of the data processing hardware or software.

B. For purposes of this Section, such related services are limited to the lesser of 20 percent of the overall procurement amount or $250,000.

C. Inclusion of consulting services as related services should include, at a minimum:

1. a scope of work that clearly and completely identifies the services to be performed;

2. a written plan to monitor the performance of the services that, at a minimum, includes the specific objectives or deliverables associated with the proposed service and monitoring plan; methods to be used to measure and determine service performance; a periodic review of interim reports or other indicia of performance performed to date and, the assignment of specific using agency personnel to a monitoring and liaison function;

3. the maximum amount of compensation to be paid for the services.

4. a provision that payment for the services will only be made upon successful completion of the scope of work for the services.

AUTHORITY NOTE: Promulgated in accordance with R.S. 39:197(1).

HISTORICAL NOTE: Promulgated by the Office of the Governor, Division of Administration, Office of State Purchasing, LR 39:310 (February 2013).

Jan B. Cassidy
Assistant Commissioner

1302#036

RULE

Office of the Governor
Real Estate Appraisers Board

Real Estate—Peer Review
Committees and Valuation Services
(LAC 46:LXVII.10309 and 10701)

Under the authority of the Louisiana Real Estate Appraisers Law, R.S. 37:3397 et seq., and in accordance with the provisions of the Louisiana Administrative Procedure Act, R.S. 49:950 et seq., the Louisiana Real Estate Appraisers Board has amended Chapter 103, Section 10309 (Application for Experience Credit), which provides for the appointment of a peer review committee, and to promulgate Chapter 107 (Appraisal Management Companies), which will enact requirements and prohibitions related to valuation services performed by a licensed real estate fee appraiser for an appraisal management company.

Title 46
PROFESSIONAL AND OCCUPATIONAL STANDARDS
Part LXVII. Real Estate
Subpart 2. Appraisers
Chapter 103. License Requirements
§10309. Application for Experience Credit

A. - C. …

D. The board shall have the authority to appoint a peer review committee to provide assistance to the board in the performance of its functions and duties in pre-license and post license review and regulation, which shall include direct appraiser mentoring to applicants for a trainee or certified appraiser license and investigator assistance.

1. Committee members shall serve at the discretion of the board and may be removed at anytime, with or without cause, upon written notice from the board.

2. The initial term of each committee member shall be for a period of two years, which shall automatically extend for successive two year terms, until such time that the member resigns from the committee, is replaced by a new board appointee, or is removed by the board.

3. Committee members shall be certified residential or certified general real estate appraisers that have been licensed in good standing for a minimum of five years.

4. Committee members shall have completed the supervisory appraiser course, or its equivalent, as determined by the board.

5. Committee members may decline any request for direct mentoring without prejudice.

6. Duties of the peer review committee shall not require committee meetings or reports to the board, as each member shall operate independent of the other members; however, members shall be subject to oversight by the board and shall respond accordingly to any board inquiry.

7. Committee members shall be available to licensed trainees and certified appraisers via telephone or e-mail for direct mentoring, which may include one or more of the following:

a. examination of appraisals or other work samples;

b. feedback to mentored appraiser regarding examined work samples;

c. help with appraisal methodology; and

d. answering queries on specific appraisal assignments.

8. Committee members assigned to assist investigators shall provide the following assistance, as needed:

a. specific appraisal methodology insight;

b. uniform standards of professional appraisal Practice insight;

c. benefit of competency and experience in appraisal practice; and

d. any other available assistance, as requested.

9. Committee members assigned to assist investigators shall remove themselves from any investigation where there may be an actual or perceived conflict of interest.

E. Applicants may submit appraisals to the peer review committee for review prior to submission of the application for experience credit.

F. Only those real property appraisals consistent with the uniform standards of professional appraisal practice will be accepted by the board for experience credit.

G. The board may require an applicant to successfully complete additional educational training consisting of not less than 15 or more than 30 instructional hours of course work approved by the board, which shall not be used to satisfy the continuing education requirement.

AUTHORITY NOTE:Promulgated in accordance with R.S. 37:3395.

HISTORICAL NOTE: Promulgated by the Department of Economic Development, Real Estate Appraisers Board of Certification, LR 25:1426 (August 1999), amended by the Office of the Governor, Real Estate Appraisers Board, LR 31:1333 (June 2005), LR 37:333 (January 2011), LR 39:310 (February 2013).

Chapter 107. Appraisal Management Companies

§10701. Appraiser Requirements and Prohibitions

A. It shall be unlawful for a licensee or certificate holder to enter into an agreement to perform valuation services, written or otherwise, with an appraisal management company, or a person, corporation, partnership, sole proprietorship, subsidiary, unit, or other business entity that engages, or attempts to engage, in the activities of an appraisal management company, as defined in R.S. 37:3415.2(a)-(b), unless the appraisal management company, person, corporation, partnership, sole proprietorship, subsidiary, unit, or other business entity is licensed in accordance with the Louisiana Appraisal Management Company Licensing and Regulation Act.

B. A licensee or certificate holder that performs valuation services for an appraisal management company may include the license number of the appraisal management company in all appraisal reports or other instruments used by the licensee or certificate holder in conducting real property appraisal activities for the appraisal management company.

AUTHORITY NOTE: Promulgated in accordance with R.S. 37:3395.

HISTORICAL NOTE: Promulgated by the Office of the Governor, Real Estate Appraisers Board, LR 39:311 (February 2013).

Bruce Unangst
Executive Director

1302#042

RULE

Department of Health and Hospitals
Board of Examiners of Psychologists

Fees (LAC 46:LXIII.601 and 603)

In accordance with R.S. 49:950 et seq., the Administrative Procedure Act, the Department of Health and Hospitals, Board of Examiners of Psychologists has amended LAC 46:LXIII.Chapter 6, Fees. This Rule modifies current licensing and administrative fees due to the increase in demand for licensure and administrative workload increase.

Title 46
PROFESSIONAL AND OCCUPATIONAL STANDARDS
Part LXIII. Psychologists

Chapter 6. Fees

§601. Licensing Fees

Licensing Fees	Amount
Application for Licensure	$200
Application for Temporary Licensure	125
Oral Examination (Licensure, specialty change or additional specialty)	250
Jurisprudence Examination	75
License Renewal	320
Emeritus License Renewal	160
Reinstatement of Lapsed License (Application plus renewal fee)	570

AUTHORITY NOTE: Promulgated in accordance with R.S. 37:2354.

HISTORICAL NOTE: Promulgated by the Department of Health and Hospitals, Board of Examiners of Psychologists, LR 33:647 (April 2007), amended LR 39:311 (February 2013).

§603. Administrative/Other Fees

Administrative/Other Fees	Amount
Address List/Labels	$ 100
License Verification	15
Disciplinary Action Report	25
Directory and Statutory Reference Book (bounded copy plus shipping)	50
Replacement License Certificate	25
Replacement Renewal Certificate	10
Photo ID Card	25
Paper processing fees (paper renewals)	15
Renewal Extension Request	25

AUTHORITY NOTE: Promulgated in accordance with R.S. 37:2354.

HISTORICAL NOTE: Promulgated by the Department of Health and Hospitals, Board of Examiners of Psychologists, LR 33:648 (April 2007), amended LR 39:311 (February 2013).

Kelly Parker
Executive Director

1302#001

RULE

Department of Health and Hospitals
Board of Pharmacy

Controlled Dangerous Substance License
for Non-Resident Distributors (LAC 46:LIII.2705)

In accordance with the provisions of the Administrative Procedure Act (R.S. 49:950 et seq.) and the Pharmacy Practice Act (R.S. 37:1161 et seq.), the Louisiana Board of Pharmacy has amended §2705 of its rules to require the acquisition of a Louisiana controlled dangerous substance (CDS) license by non-resident distributors prior to the distribution of controlled dangerous substances to any Louisiana purchaser.

Title 46
PROFESSIONAL AND OCCUPATIONAL STANDARDS
Part LIII. Pharmacists
Chapter 27. Controlled Dangerous Substances
Subchapter B. Licenses
§2705. Licenses and Exemptions

A. - E. ...

F. Manufacturers and Distributors

1. - 2. …

3. The sale or transportation of controlled substances within the state of Louisiana by manufacturers and distributors located outside the state of Louisiana shall require the possession of a valid CDS license issued by the board prior to the engagement of such activities.

G. - J. …

AUTHORITY NOTE: Promulgated in accordance with R.S. 40:972.

HISTORICAL NOTE: Promulgated by the Department of Health and Hospitals, Board of Pharmacy, LR 34:2129 (October 2008), amended LR 39:312 (February 2013).

Malcolm J. Broussard
Executive Director

1302#031

RULE

Department of Health and Hospitals
Board of Pharmacy

Controlled Dangerous Substances in Emergency
Drug Kits (LAC 46:LIII.1713 and 2743)

In accordance with the provisions of the Administrative Procedure Act (R.S. 49:950 et seq.) and the Pharmacy Practice Act (R.S. 37:1161 et seq.), the Louisiana Board of Pharmacy has amended its rules to authorize pharmacies utilizing emergency drug kits at long-term care facilities to place a portion of its inventory of controlled dangerous substances within such kits.

Title 46
PROFESSIONAL AND OCCUPATIONAL STANDARDS
Part LIII. Pharmacists
Chapter 17. Institutional Pharmacy
Subchapter B. Emergency Drug Kits
§1713. Emergency Drug Kit Requirements

A. - I.2. …

J. The placement of controlled dangerous substances in an EDK in non-federally registered long-term care facilities shall be deemed in compliance with the Comprehensive Drug Abuse Prevention and Control Act of 1970 provided that:

1. controlled dangerous substances shall be stored in the EDK as deemed necessary and jointly approved by the pharmacist, medical director and the director of nursing services;

2. the source from which the controlled dangerous substances for EDKs are obtained shall be a pharmacy licensed by the board in possession of a valid DEA registration and Louisiana CDS license;

3. the number of different controlled dangerous substances in a single EDK shall be limited to a maximum of eight separate drug entities with not more than eight single-use containers of each drug entity;

4. the EDK containing controlled dangerous substances shall be closed with a tamper proof seal and kept in a locked medication room, cart or closet;

5. access to controlled dangerous substances stored in an EDK shall be limited to the pharmacist, a practitioner, the director of nursing services, or the registered nurse or licensed practical nurse on duty;

6. controlled dangerous substances stored in an EDK shall be administered to a patient only by authorized personnel and only as expressly authorized by an individual practitioner and in compliance with the provisions of 21 CFR 1306.11 and 21 CFR 1306.21 or their successors;

7. a usage record shall be retained in the EDK for each separate drug included which shall be completed by the nursing staff when retrieving any controlled dangerous substance(s) from the EDK;

8. the pharmacist at the provider pharmacy shall receive and retain all completed usage records for a minimum of two years;

9. when the EDK is opened:

a. the pharmacist shall be notified by the facility within 24 hours; and

b. shift counts shall be performed by the nursing staff on all controlled dangerous substances until the kit is resealed by the pharmacist;

10. shift counts of the controlled dangerous substances contained in the EDK shall not be required when the EDK is sealed;

11. the pharmacist shall check the controlled dangerous substances in the EDK at least monthly and so document that check inside the kit.

AUTHORITY NOTE: Promulgated in accordance with R.S. 37:1182.

HISTORICAL NOTE: Promulgated by the Department of Health and Hospitals, Board of Pharmacy, LR 29:2096 (October

2003), effective January 1, 2004, amended LR 39:312 (February 2013).

Chapter 27. Controlled Dangerous Substances

Subchapter F. Production, Distribution and Utilization

§2743. Procurement Requirements

A. - B. …

C. Acquisition of Controlled Dangerous Substances by Institutional Facilities

1. A Louisiana-licensed pharmacy in possession of a valid Louisiana CDS license and DEA registration may include a portion of its controlled dangerous substance inventory within an emergency drug kit (EDK) placed in a non-federally registered institutional facility, but only under the following conditions:

a. the EDK bears a valid EDK permit issued by the board; and

b. the inclusion and management of controlled dangerous substances in such EDK shall comply with the provisions of Section 1713.J of these rules.

AUTHORITY NOTE: Promulgated in accordance with R.S. 40:972.

HISTORICAL NOTE: Promulgated by the Department of Health and Hospitals, Board of Pharmacy, LR 34:2148 (October 2008), amended LR 39:313 (February 2013).

Malcolm J. Broussard
Executive Director

1302#030

RULE

Department of Health and Hospitals
Board of Pharmacy

Institutional Pharmacies (LAC 46:LIII.1705 and 1727)

In accordance with the provisions of the Administrative Procedure Act (R.S. 49:950 et seq.) and the Pharmacy Practice Act (R.S. 37:1161 et seq.), the Louisiana Board of Pharmacy has amended Section 1705 and repealed Section 1727 of LAC 46:LIII.Chapter 17, Institutional Pharmacy. In particular, the amendments clarify provisions relative to pharmacies operated in hospitals and penal institutions.

Title 46
PROFESSIONAL AND OCCUPATIONAL STANDARDS
Part LIII. Pharmacists

Chapter 17. Institutional Pharmacy

Subchapter A. General Requirements

§1705. Institutional Pharmacy Permit

A. An institutional pharmacy permit shall be required to operate a pharmacy department located within an institutional facility, other than a hospital or penal institution, for residents or patients of that institutional facility. The permit shall be applied for, and renewed, in the manner prescribed by the board in Chapter 11 of these regulations.

B. Pharmacies operated within a hospital shall be operated in accordance with Chapter 15 of these regulations.

C. Pharmacies operated within a penal institution shall be operated in accordance with Chapter 18 of these regulations.

AUTHORITY NOTE: Promulgated in accordance with R.S. 37:1182.

HISTORICAL NOTE: Promulgated by the Department of Health and Hospitals, Board of Pharmacy, LR 14:708 (October 1988), effective January 1, 1989, amended LR 29:2095 (October 2003), effective January 1, 2004, LR 39:313 (February 2013).

Subchapter D. Drug Donations to Pharmacies in Penal Institutions

§1727. Medication Transfers

Repealed.

AUTHORITY NOTE: Promulgated in accordance with R.S. 37:1182.

HISTORICAL NOTE: Promulgated by the Department of Health and Hospitals, Board of Pharmacy, LR 34:1408 (July 2008), repealed LR 39:313 (February 2013).

Malcolm J. Broussard
Executive Director

1302#029

RULE

Department of Health and Hospitals
Board of Pharmacy

Interstate Remote Processing
(LAC 46:LIII.1139 and 1143)

In accordance with the provisions of the Administrative Procedure Act (R.S. 49:950 et seq.) and the Pharmacy Practice Act (R.S. 37:1161 et seq.), the Louisiana Board of Pharmacy has amended its rules relative to the remote processing of prescriptions and medical orders. In particular, the amendments will permit any two pharmacies licensed by the board, regardless of location, to engage in such activities, subject to the limitations previously promulgated by the board.

Title 46
PROFESSIONAL AND OCCUPATIONAL STANDARDS
Part LIII. Pharmacists

Chapter 11. Pharmacies

Subchapter D. Off-Site Services

§1139. Definitions

A. As used in this Subchapter, the following terms shall have the meaning ascribed to them in this Section, unless the context clearly indicates otherwise.

* * *

Remote Processor—a Louisiana-permitted pharmacy which provides remote processing services for another permitted pharmacy in Louisiana.

AUTHORITY NOTE: Promulgated in accordance with R.S. 37:1182.

HISTORICAL NOTE: Promulgated by the Department of Health and Hospitals, Board of Pharmacy, LR 33:1131 (June 2007), amended LR 39:313 (February 2013).

§1143. Remote Processing of Medical Orders or Prescription Drug Orders

A. - A.2. ...

a. In the event the pharmacy soliciting remote processing services is located within a hospital with more than 100 occupied beds, there shall be at least one pharmacist on duty at that hospital at all times, and any remote processing services provided to that pharmacy shall be supplemental in nature.

b. In the event the pharmacy providing remote processing services performs such services for a hospital

pharmacy, the performance of all such services shall be limited to licensed pharmacists.

B. - C.2.c. ...

AUTHORITY NOTE: Promulgated in accordance with R.S. 37:1182.

HISTORICAL NOTE: Promulgated by the Department of Health and Hospitals, Board of Pharmacy, LR 33:1132 (June 2007), amended LR 39:313 (February 2013).

Malcolm J. Broussard
Executive Director

1302#032

RULE

Department of Health and Hospitals
Board of Pharmacy

Prescription Monitoring Program
(LAC 46:LIII.2901, 2909, 2911,
2913, 2917, 2921, 2925 and 2931)

In accordance with the provisions of the Administrative Procedure Act (R.S. 49:950 et seq.) and the Pharmacy Practice Act (R.S. 37:1161 et seq.), the Louisiana Board of Pharmacy has amended LAC 46:LIII.Chapter 29, Prescription Monitoring Program, for the purpose of implementing the provisions of Acts 144 and 488 of the 2010 Regular Session of the Louisiana Legislature and Act 352 of the 2012 Regular Session of the Louisiana Legislature.

Title 46
PROFESSIONAL AND OCCUPATIONAL STANDARDS
Part LIII. Pharmacists
Chapter 29. Prescription Monitoring Program
Subchapter A. General Operations
§2901. Definitions

A. As used in this Chapter, the following terms shall have the meaning ascribed to them unless the context clearly indicates otherwise.

* * *

Dispenser—a person authorized by this state to dispense or distribute to the ultimate user any controlled substance or drug monitored by the program, but shall not include any of the following:

a. - d. …

e. a veterinarian who dispenses negligible amounts of controlled substances or drugs of concern, as identified by rule.

* * *

AUTHORITY NOTE: Promulgated in accordance with R.S. 40:1011.

HISTORICAL NOTE: Promulgated by the Department of Health and Hospitals, Board of Pharmacy, LR 33:1345 (July 2007), amended LR 36:755 (April 2010), effective September 1, 2010, LR 39:314 (February 2013).

§2909. Advisory Council

A. The advisory council shall consist of the following members, each of whom may appoint a designee:

1. - 4. …

5. The president of the Louisiana State Board of Veterinary Medicine;

6. - 25. …

26. The president of the Louisiana Veterinary Medical Association.

B. - C.6. …

AUTHORITY NOTE: Promulgated in accordance with R.S. 40:1005.

HISTORICAL NOTE: Promulgated by the Department of Health and Hospitals, Board of Pharmacy, LR 33:1346 (July 2007), amended LR 39:314 (February 2013).

Subchapter B. Data Collection
§2911. Reporting of Prescription Monitoring Information

A. …

B. Each dispenser shall submit the required information by electronic means as soon as possible but in no event more than seven days after the date of dispensing.

C. ...

AUTHORITY NOTE: Promulgated in accordance with R.S. 40:1011.

HISTORICAL NOTE: Promulgated by the Department of Health and Hospitals, Board of Pharmacy, LR 33:1346 (July 2007), amended LR 39:314 (February 2013).

§2913. Required Data Elements

A. The information submitted for each prescription shall include data relative to the identification of the following elements of the transaction, or alternative data as identified in the board's program user manual. To the extent possible, the data shall be transmitted in the format established by the American Society for Automation in Pharmacy (ASAP) Telecommunications Format for Prescription Monitoring Programs Standard Version 4.2 or a successor.

1. Prescriber information:

a. last and first name of prescriber;

b. United States Drug Enforcement Administration (DEA) registration number, and suffix if applicable, or in the alternative, the national provider identifier (NPI) number, as issued by the United States Centers for Medicare and Medicaid Services (CMS).

2. Patient information:

a. last and first name of human patient and middle initial or name if available, or in the event of a veterinary prescription, the client's name and patient's animal species;

b. complete address of patient;

c. - d. …

e. gender code;

f. species code.

3. Prescription information:

a. - c. …

d. number of refills authorized on original prescription and refill number;

e. ...

4. Drug information:

a. …

b. quantity dispensed;

c. days supply.

5. Dispenser information:

a. DEA registration number, or in the alternative, the national provider identifier (NPI) number.

AUTHORITY NOTE: Promulgated in accordance with R.S. 40:1011.

HISTORICAL NOTE: Promulgated by the Department of Health and Hospitals, Board of Pharmacy, LR 33:1346 (July 2007), amended LR 39:314 (February 2013).

Subchapter C. Access to Prescription Monitoring Information

§2917. Authorized Direct Access Users of Prescription Monitoring Information

A. The following persons may access prescription monitoring information in the same or similar manner, and for the same or similar purposes, as those persons are authorized to access similar protected health information under federal and state law and regulation:

1. persons authorized to prescribe or dispense controlled substances or drugs of concern for the purpose of providing medical or pharmaceutical care for their patients, or for verifying their prescription records;

2. designated representatives from the professional licensing, certification, or regulatory agencies of this state or another state charged with administrative oversight of those professionals engaged in the prescribing or dispensing of controlled substances or other drugs of concern;

3. - 4. ...

5. prescription monitoring programs located in other states, through a secure interstate data exchange system or health information exchange system approved by the board, but only in compliance with the provisions of R.S. 40:1007(G).

AUTHORITY NOTE: Promulgated in accordance with R.S. 40:1011.

HISTORICAL NOTE: Promulgated by the Department of Health and Hospitals, Board of Pharmacy, LR 33:1347 (July 2007), amended LR 39:315 (February 2013).

§2921. Methods of Access to Prescription Monitoring Information

A. Prescribers and dispensers, once properly registered, may solicit prescription monitoring information from the program concerning their patients, or for verifying their prescription records. The program may require such users to certify the legitimacy of their inquiry prior to furnishing the requested information.

B. - D. …

E. Upon receipt of one of the following methods of application by local, state, out-of-state, or federal law enforcement or prosecutorial officials, the program may provide prescription monitoring information:

E.1. - G. …

H. Prescription monitoring programs located in other states may access prescription monitoring information from the program through a secure interstate data exchange system or health information exchange system approved by the board.

AUTHORITY NOTE: Promulgated in accordance with R.S. 40:1011.

HISTORICAL NOTE: Promulgated by the Department of Health and Hospitals, Board of Pharmacy, LR 33:1347 (July 2007), amended LR 39:315 (February 2013).

Subchapter D. Reports

§2925. Release of Prescription Monitoring Information to Other Entities

A. The program shall provide prescription monitoring information to public or private entities, whether located in or outside the state, for public research, policy, or educational purposes, but only after removing information that identifies or could reasonably be used to identify prescribers, dispensers, and individual patients or persons who received prescriptions from prescribers.

AUTHORITY NOTE: Promulgated in accordance with R.S. 40:1011.

HISTORICAL NOTE: Promulgated by the Department of Health and Hospitals, Board of Pharmacy, LR 33:1348 (July 2007), amended LR 39:315 (February 2013).

Subchapter E. Exemptions

§2931. Exemptions

Repealed.

AUTHORITY NOTE: Promulgated in accordance with R.S. 40:1011.

HISTORICAL NOTE: Promulgated by the Department of Health and Hospitals, Board of Pharmacy, LR 33:1348 (July 2007), repealed LR 39:315 (February 2013).

Malcolm J. Broussard
Executive Director

1302#028

RULE

Department of Health and Hospitals
Board of Pharmacy

Security of Prescription Department (LAC 46:LIII.1103)

In accordance with the provisions of the Administrative Procedure Act (R.S. 49:950 et seq.) and the Pharmacy Practice Act (R.S. 37:1161 et seq.), the Louisiana Board of Pharmacy has amended §1103 of its rules. In particular, the amendment provides an alternative security requirement for prescription departments located within certain pharmacies.

Title 46
PROFESSIONAL AND OCCUPATIONAL STANDARDS
Part LIII. Pharmacists

Chapter 11. Pharmacies

Subchapter A. General Requirements

§1103. Prescription Department Requirements

A. - H.3. ...

I. Pharmacy Security. The prescription department or the premises housing the prescription department shall be adequately secured by the installation of partitions and secured entrances, which shall be locked by a pharmacist and made inaccessible when the prescription department is closed. The prescription department or any premises housing a prescription department shall be adequately secured by an alarm system.

J. - K. …

AUTHORITY NOTE: Promulgated in accordance with R.S. 37:1182.

HISTORICAL NOTE: Promulgated by the Department of Health and Hospitals, Board of Pharmacy, LR 23:1310 (October 1997), amended LR 29:2087 (October 2003), effective January 1, 2004, LR 39:315 (February 2013).

Malcolm J. Broussard
Executive Director

1302#027

RULE

Department of Health and Hospitals
Bureau of Health Services Financing

Adult Dentures Program
Reimbursement Rate Reduction
(LAC 50:XXV.701)

The Department of Health and Hospitals, Bureau of Health Services Financing has amended LAC 50:XXV.701 in the Medical Assistance Program as authorized by R.S. 36:254 and pursuant to Title XIX of the Social Security Act. This Rule is promulgated in accordance with the provisions of the Administrative Procedure Act, R. S. 49:950 et seq.

Title 50
PUBLIC HEALTH—MEDICAL ASSISTANCE
Part XXV. Adult Dentures
Chapter 7. Reimbursement
§701. Fees

A. ...

B. Effective for dates of service on or after July 1, 2012, the reimbursement fees on file for the following adult denture services shall be reduced to the following percentages of the 2009 National Dental Advisory Service comprehensive fee report 70th percentile, unless otherwise stated in this Chapter:

1. 65 percent for the comprehensive evaluation exam; and
2. 56 percent for full mouth x-ray.

C. Removable prosthodontics shall be excluded from the July 1, 2012 reimbursement rate reduction.

AUTHORITY NOTE: Promulgated in accordance with R.S. 36:254 and Title XIX of the Social Security Act.

HISTORICAL NOTE: Promulgated by the Department of Health and Hospitals, Office of the Secretary, Bureau of Health Services Financing, LR 31:81 (January 2005), repromulgated LR 31:1589 (July 2005), amended by the Department of Health and Hospitals, Bureau of Health Services Financing, LR 39:316 (February 2013).

Implementation of the provisions of this Rule may be contingent upon the approval of the U.S. Department of Health and Human Services, Centers for Medicare and Medicaid Services (CMS), if it is determined that submission to CMS for review and approval is required.

Bruce D. Greenstein
Secretary

1302#095

RULE

Department of Health and Hospitals
Bureau of Health Services Financing
and
Office of Aging and Adult Services

All Inclusive Care for the Elderly
Reimbursement Rate Reduction
(LAC 50:XXIII.1301)

The Department of Health and Hospitals, Bureau of Health Services Financing and the Office of Aging and Adult Services have amended LAC 50:XXIII.1301 in the Medical Assistance Program as authorized by R.S. 36:254 and pursuant to Title XIX of the Social Security Act. This Rule is promulgated in accordance with the provisions of the Administrative Procedure Act, R.S. 49:950 et seq.

Title 50
PUBLIC HEALTH—MEDICAL ASSISTANCE
Part XXIII. All Inclusive Care for the Elderly
Chapter 13. Reimbursement
§1301. Payment

A. - L. …

M. Effective for dates of service on or after July 1, 2012, the monthly capitated amount paid to a PACE organization shall be reduced by 2 percent of the capitated amount on file as of June 30, 2012.

AUTHORITY NOTE: Promulgated in accordance with R.S. 36:254 and Title XIX of the Social Security Act.

HISTORICAL NOTE: Promulgated by the Department of Health and Hospitals, Office of the Secretary, Bureau of Health Services Financing, LR 30:250 (February 2004), amended LR 33:850 (May 2007), amended by the Department of Health and Hospitals, Bureau of Health Services Financing and the Office of Aging and Adult Services, LR 37:1572 (June 2011), LR 39:316 (February 2013).

Implementation of the provisions of this Rule may be contingent upon the approval of the U.S. Department of Health and Human Services, Centers for Medicare and Medicaid Services (CMS), if it is determined that submission to CMS for review and approval is required.

Bruce D. Greenstein
Secretary

1302#096

RULE

Department of Health and Hospitals
Bureau of Health Services Financing

Ambulatory Surgical Centers
Reimbursement Rate Reduction
(LAC 50:XI.7503)

The Department of Health and Hospitals, Bureau of Health Services Financing has amended LAC 50:XI.7503 in the Medical Assistance Program as authorized by R.S.

36:254 and pursuant to Title XIX of the Social Security Act. This Rule is promulgated in accordance with the provisions of the Administrative Procedure Act, R.S. 49:950 et seq.

Title 50
PUBLIC HEALTH—MEDICAL ASSISTANCE
Part XI. Clinic Services
Subpart 11. Ambulatory Surgical Centers
Chapter 75. Reimbursement
§7503. Reimbursement Methodology

A. - F. …

G. Effective for dates of service on or after July 1, 2012, the reimbursement for surgical services provided by an ambulatory surgical center shall be reduced by 3.7 percent of the fee amounts on file as of June 30, 2012.

AUTHORITY NOTE: Promulgated in accordance with R.S. 36:254 and Title XIX of the Social Security Act.

HISTORICAL NOTE: Promulgated by the Department of Health and Hospitals, Bureau of Health Services Financing, LR 35:1889 (September 2009), amended LR 36:2278 (October 2010), LR 37:1572 (June 2011), LR 39:317 (February 2013).

Implementation of the provisions of this Rule may be contingent upon the approval of the U.S. Department of Health and Human Services, Centers for Medicare and Medicaid Services (CMS), if it is determined that submission to CMS for review and approval is required.

Bruce D. Greenstein
Secretary

1302#097

RULE

Department of Health and Hospitals
Bureau of Health Services Financing
and
Office of Behavioral Health

Behavioral Health Services
Statewide Management Organization
Adults Capitated Payment Reduction
(LAC 50:XXXIII.501)

The Department of Health and Hospitals, Bureau of Health Services Financing and the Office for Behavioral Health have amended LAC 50:XXXIII.501 in the Medical Assistance Program as authorized by R.S. 36:254 and pursuant to Title XIX of the Social Security Act. This Rule is promulgated in accordance with the provisions of the Administrative Procedure Act, R.S. 49:950 et seq.

Title 50
PUBLIC HEALTH—MEDICAL ASSISTANCE
Part XXXIII. Behavioral Health Services
Subpart 1. Statewide Management Organization
Chapter5. Reimbursement
§501. Reimbursement Methodology

A. - B. ...

C. Effective for dates of service on or after July 1, 2012, the monthly capitation payments to the PIHP/SMO for adult behavioral health services shall be reduced by 1.927 percent of the monthly capitation payments on file as of June 30, 2012.

AUTHORITY NOTE: Promulgated in accordance with R.S. 36:254 and Title XIX of the Social Security Act.

HISTORICAL NOTE: Promulgated by the Department of Health and Hospitals, Bureau of Health Services Financing, LR 38:363 (February 2012), amended by the Department of Health and Hospitals, Bureau of Health Services Financing and the Office of Behavioral Health, LR 39:317 (February 2013).

Implementation of the provisions of this Rule may be contingent upon the approval of the U.S. Department of Health and Human Services, Centers for Medicare and Medicaid Services (CMS), if it is determined that submission to CMS for review and approval is required.

Bruce D. Greenstein
Secretary

1302#098

RULE

Department of Health and Hospitals
Bureau of Health Services Financing
and
Office of Behavioral Health

Children's Behavioral Health Services
Reimbursement Rate Reduction
(LAC 50:XXXIII.2701)

The Department of Health and Hospitals, Bureau of Health Services Financing and the Office of Behavioral Health have amended LAC 50:XXXIII.2701 in the Medical Assistance Program as authorized by R.S. 36:254 and pursuant to Title XIX of the Social Security Act. This Rule is promulgated in accordance with the provisions of the Administrative Procedure Act, R.S. 49:950 et seq.

Title 50
PUBLIC HEALTH—MEDICAL ASSISTANCE
Part XXXIII. Behavioral Health Services
Subpart 3. Children's Behavioral Health Services
Chapter 27. Reimbursement
§2701. Reimbursement Methodology

A. …

B. Effective for dates of service on or after July 1, 2012, the reimbursement rates for the following behavioral health services provided to children/adolescents shall be reduced by 1.44 percent of the rates in effect on June 30, 2012:

1. therapeutic services;
2. rehabilitation services; and
3. crisis intervention services.

AUTHORITY NOTE: Promulgated in accordance with R.S. 36:254 and Title XIX of the Social Security Act.

HISTORICAL NOTE: Promulgated by the Department of Health and Hospitals, Bureau of Health Services Financing, LR 38:365 (February 2012), amended LR 39:317 (February 2013).

Implementation of the provisions of this Rule may be contingent upon the approval of the U.S. Department of Health and Human Services, Centers for Medicare and Medicaid Services (CMS), if it is determined that submission to CMS for review and approval is required.

Bruce D. Greenstein
Secretary

1302#099

RULE

Department of Health and Hospitals
Bureau of Health Services Financing

Coordinated Care Network
Pharmacy Services Coverage
(LAC 50:I.3507)

Editor's Note: This Section is being repromulgated to correct a typographical error. The original Rule can be viewed in full in the January 20, 2013 edition of the *Louisiana Register* on pages 92-93.

The Department of Health and Hospitals, Bureau of Health Services Financing has amended LAC 50:I.3503-3509 in the Medical Assistance Program as authorized by R.S. 36:254 and pursuant to Title XIX of the Social Security Act. This Rule is promulgated in accordance with the provisions of the Administrative Procedure Act, R.S. 49:950 et seq.

Title 50
PUBLIC HEALTH—MEDICAL ASSISTANCE
Part I. Administration
Subpart 3. Medicaid Coordinated Care
Chapter 35. Coordinated Care Network Managed Care Organization Model
§3507. Benefits and Services

A. - A.2. ...

B. The CCN-P:

1. - 5.a. ...

b. no medical service limitation can be more restrictive than those that currently exist under the Title XIX Louisiana Medicaid State Plan;

6. shall provide pregnancy-related services that are necessary for the health of the pregnant woman and fetus, or that have become necessary as a result of being pregnant and includes, but is not limited to prenatal care, delivery, postpartum care, and family planning/interconception care services for pregnant women in accordance with federal regulations; and

7. shall establish a pharmaceutical and therapeutics (P and T) committee or similar committee for the development of its formulary and the PDL.

C. - C.4. ...

D. The following is a summary listing of the core benefits and services that a CCN-P is required to provide:

1. - 16. ...

17. chiropractic services;

18. rehabilitation therapy services (physical, occupational, and speech therapies); and

19. pharmacy services (prescription drugs).

NOTE: This overview is not all inclusive. The contract, policy transmittals, state plan amendments, regulations, provider bulletins, provider manuals, published fee schedules, and guides issued by the department are the final authority regarding services.

E. - G.1.f. ...

g. school-based individualized education plan services provided by a school district and billed through the intermediate school district, or school-based services funded with certified public expenditures;

h. home and community-based waiver services;

i. specialized behavioral health; and

j. targeted case management services.

H. - H.5. ...

AUTHORITY NOTE: Promulgated in accordance with R.S. 36:254 and Title XIX of the Social Security Act.

HISTORICAL NOTE: Promulgated by the Department of Health and Hospitals, Bureau of Health Services Financing, LR 37:185 (June 2011), amended LR 39:92 (January 2013), repromulgated LR 39:318 (February 2013)

Bruce D. Greenstein
Secretary

1302#100

RULE

Department of Health and Hospitals
Bureau of Health Services Financing

Early and Periodic Screening
Diagnosis and Treatment Program
(LAC 50:XV.6501 and Chapter 67)

The Department of Health and Hospitals, Bureau of Health Services Financing has adopted LAC 50:XV.6501 and has repealed Chapter 67 in the Medical Assistance Program as authorized by R.S. 36:254 and pursuant to Title XIX of the Social Security Act. This Rule is promulgated in accordance with the provisions of the Administrative Procedure Act, R.S. 49:950 et seq.

Title 50
PUBLIC HEALTH—MEDICAL ASSISTANCE
Part XV. Services for Special Populations
Subpart 5. Early and Periodic Screening, Diagnosis, and Treatment
Chapter 65. General Provisions
§6501. Screening Services

A. All providers of early and periodic screening, diagnosis and treatment (EPSDT) preventive screening services shall be required to submit information to the Medicaid Program regarding recipient immunizations, referrals, and health status.

B. Screening services rendered to Medicaid-eligible children under 21 years of age and reimbursable under the EPSDT Program shall include:

1. health education (including anticipatory guidance) as a minimum component in addition to a comprehensive health and development history (including assessment of both physical and mental health development);

2. a comprehensive unclothed physical exam;

3. appropriate immunizations according to age and health history; and

4. laboratory tests (including blood lead level assessment appropriate for age and risk factors).

C. Vision and hearing services shall be performed according to distinct periodicity schedules which meet reasonable standards of medical practice, as determined after consultation with recognized medical organizations involved in child health care.

AUTHORITY NOTE: Promulgated in accordance with R.S. 36:254 and Title XIX of the Social Security Act.

HISTORICAL NOTE: Promulgated by the Department of Health and Hospitals, Bureau of Health Services Financing, LR 39:318 (February 2013).

Chapter 67. KIDMED

§6701. General Provisions

Repealed.

AUTHORITY NOTE: Promulgated in accordance with R.S. 36:254 and Title XIX of the Social Security Act.

HISTORICAL NOTE: Promulgated by the Department of Health and Hospitals, Office of the Secretary, Bureau of Health Services Financing, LR 30:1698 (August 2004), repealed by the Department of Health and Hospitals, Bureau of Health Services Financing, LR 39:319 (February 2013).

§6703. Screening Services

Repealed.

AUTHORITY NOTE: Promulgated in accordance with R.S. 36:254 and Title XIX of the Social Security Act.

HISTORICAL NOTE: Promulgated by the Department of Health and Hospitals, Office of the Secretary, Bureau of Health Services Financing, LR 29:175 (February 2003), repealed by the Department of Health and Hospitals, Bureau of Health Services Financing, LR 39:319 (February 2013).

§6705. Reimbursement

Repealed.

AUTHORITY NOTE: Promulgated in accordance with R.S. 36:254 and Title XIX of the Social Security Act.

HISTORICAL NOTE: Promulgated by the Department of Health and Hospitals, Office of the Secretary, Bureau of Health Services Financing, LR 29:175 (February 2003), amended LR 30:800 (April 2004), amended by the Department of Health and Hospitals, Bureau of Health Services Financing, LR 36:759 (April 2010), repealed LR 39:319 (February 2013).

Implementation of the provisions of this Rule may be contingent upon the approval of the U.S. Department of Health and Human Services, Centers for Medicare and Medicaid Services (CMS), if it is determined that submission to CMS for review and approval is required.

Bruce D. Greenstein
Secretary

1302#101

RULE

Department of Health and Hospitals
Bureau of Health Services Financing
and
Office of Aging and Adult Services

Home and Community-Based Services Waivers
Community Choices Waiver (LAC 50:XXI.8105, 8301, 8302, 8305, 8307, 8311, 8313, 8315, 8321, 8323, 8501, 8701, 8901, 8903, 9301, 9303, 9501, and 9503)

The Department of Health and Hospitals, Bureau of Health Services Financing and the Office of Aging and Adult Services have amended LAC 50:XXI.Chapters 81, 83, 85, 87, 89, 93, and 95 in the Medical Assistance Program as authorized by R.S. 36:254 and pursuant to Title XIX of the Social Security Act. This Rule is promulgated in accordance with the provisions of the Administrative Procedure Act, R.S. 49:950 et seq.

Title 50
PUBLIC HEALTH—MEDICAL ASSISTANCE
Part XXI. Home and Community Based Services Waivers
Subpart 7. Community Choices Waiver

Chapter 81. General Provisions

§8105. Programmatic Allocation of Waiver Opportunities

A. - D. ...

E. Notwithstanding the priority group provisions, up to 300 community choices waiver opportunities may be granted to qualified individuals who require emergency waiver services. These individuals shall be offered an opportunity on a first-come, first-serve basis.

1. To be considered for an expedited waiver opportunity, the individual must, at the time of the request for the expedited opportunity, be approved for the maximum amount of services allowable under the Long Term Personal Care Services Program and require institutional placement, unless offered an expedited waiver opportunity.

2. - 2.b. ...

c. the support from an informal caregiver is not available due to a family crisis;

d. the person lives alone and has no access to informal support; or

e. for other reasons, the person lacks access to adequate informal support to prevent nursing facility placement.

AUTHORITY NOTE: Promulgated in accordance with R.S. 36:254 and Title XIX of the Social Security Act.

HISTORICAL NOTE: Promulgated by the Department of Health and Hospitals, Bureau of Health Services Financing and the Office of Aging and Adult Services, LR 37:3517 (December 2011), amended LR 39:319 (February 2013).

Chapter 83. Covered Services

§8301. Support Coordination

A. Support coordination is services that will assist participants in gaining access to needed waiver and other state plan services, as well as needed medical, social, educational, housing, and other services, regardless of the funding source for these services. Support coordination agencies shall be required to perform the following core elements of support coordination services:

1. intake;
2. assessment;
3. plan of care development and revision;
4. linkage to direct services and other resources;
5. coordination of multiple services among multiple providers;
6. monitoring and follow-up;
7. reassessment;
8. evaluation and re-evaluation of the level of care and need for waiver services;
9. ongoing assessment and mitigation of health, behavioral and personal safety risk;
10. responding to participant crises;
11. critical incident management; and
12. transition/discharge and closure.

B. Support coordinators shall provide information and assistance to waiver participants in directing and managing their services.

1. When participants choose to self-direct their waiver services, the support coordinators are responsible for informing participants about:

a. their responsibilities as an employer;

b. how their activities as an employer are coordinated with the fiscal agent and support; and

c. their responsibility to comply with all applicable state and federal laws, rules, policies, and procedures.

AUTHORITY NOTE: Promulgated in accordance with R.S. 36:254 and Title XIX of the Social Security Act.

HISTORICAL NOTE: Promulgated by the Department of Health and Hospitals, Bureau of Health Services Financing and the Office of Aging and Adult Services, LR 37:3519 (December 2011), amended LR 39:319 (February 2013).

§8302. Long-Term Personal Care Services

A. Community choices waiver participants cannot also receive long-term personal care services.

AUTHORITY NOTE: Promulgated in accordance with R.S. 36:254 and Title XIX of the Social Security Act.

HISTORICAL NOTE: Promulgated by the Department of Health and Hospitals, Bureau of Health Services Financing and the Office of Aging and Adult Services, LR 39:320 (February 2013).

§8305. Environmental Accessibility Adaptations

A. - A.1. …

a. Once identified by MDS-HC, a credentialed assessor must verify the need for, and draft job specifications including quotes for, the environmental accessibility adaptation(s).

b. ...

AUTHORITY NOTE: Promulgated in accordance with R.S. 36:254 and Title XIX of the Social Security Act.

HISTORICAL NOTE: Promulgated by the Department of Health and Hospitals, Bureau of Health Services Financing and the Office of Aging and Adult Services, LR 37:3519 (December 2011), amended LR 39:320 (February 2013).

§8307. Personal Assistance Services

A. - A.3. ...

4. supervision or assistance with health related tasks (any health related procedures governed under the Nurse Practice Act) in accordance with applicable laws governing the delegation of medical tasks/medication administration;

5. supervision or assistance while escorting/accompanying the participant outside of the home to perform tasks, including instrumental activities of daily living, health maintenance or other needs as identified in the POC and to provide the same supervision or assistance as would be rendered in the home; and

A.6. - C. ...

D. PAS may be provided through the "a.m." and "p.m." delivery option defined as follows:

1. a minimum of one hour and a maximum of two hours of PAS provided to assist the participant at the beginning of his/her day, referred to as the "a.m." portion of this PAS delivery method; and

2. a minimum of one hour and a maximum of two hours to assist the participant at the end of his/her day, referred to as the "p.m." portion of this PAS delivery method; and

3. a minimum four hours break between the "a.m." and the "p.m." portions of this PAS delivery method; and

4. not to exceed a maximum of four hours of PAS being provided within a calendar day;

5. "a.m." and "p.m." PAS cannot be "shared" and may not be provided on the same calendar day as other PAS delivery methods;

6. it is permissible to receive only the "a.m." or "p.m." portion of PAS within a calendar day. However, "a.m." and/or "p.m." PAS may not be provided on the same calendar day as other PAS delivery methods;

7. PAS providers must be able to provide both regular and "a.m." and "p.m." PAS and cannot refuse to accept a community choices waiver participant solely due to the type of PAS delivery method that is listed on the POC.

E. PAS may be provided by one worker for up to three waiver participants who live together and who have a common direct service provider. Wavier participants may share PAS staff when agreed to by the participants and as long as the health and welfare of each participant can be reasonably assured. Shared PAS is to be reflected in the POC of each participant. Reimbursement rates shall be adjusted accordingly.

1. - 6. Repealed.

F. A home health agency direct service worker who renders PAS must be a qualified home health aide as specified in Louisiana's minimum licensing standards for home health agencies.

G. Every PAS provider shall ensure that each waiver participant who receives PAS has a written individualized back-up staffing plan and agreement for use in the event that the assigned PAS worker is unable to provide support due to unplanned circumstances, including emergencies which arise during a shift. The individualized plan and agreement shall be developed and maintained in accordance with OAAS policy.

H. Every PAS provider shall ensure timely completion of the emergency plan for each waiver participant they serve in accordance with OAAS policy.

I. The following individuals are prohibited from being reimbursed for providing services to a participant:

1. the participant's spouse;
2. the participant's curator;
3. the participant's tutor;
4. the participant's legal guardian;
5. the participant's responsible representative; or
6. the person to whom the participant has given representative and mandate authority (also known as power of attorney).

J. Participants are not permitted to receive PAS while living in a home or property owned, operated, or controlled by a provider of services who is not related by blood or marriage to the participant.

1. - 6. Repealed.

K. It is permissible for the PAS allotment to be used flexibly in accordance with the participant's preferences and personal schedule and OAAS' documentation requirements.

AUTHORITY NOTE: Promulgated in accordance with R.S. 36:254 and Title XIX of the Social Security Act.

HISTORICAL NOTE: Promulgated by the Department of Health and Hospitals, Bureau of Health Services Financing and the Office of Aging and Adult Services, LR 37:3519 (December 2011), amended LR 39:320 (February 2013).

§8311. Adult Day Health Care Services

A. ...

B. ADHC services include:

1. meals, which shall not constitute a "full nutritional regimen" (three meals per day) but shall include a minimum of two snacks and a hot nutritious lunch;

2. transportation between the participant's place of residence and the ADHC in accordance with licensing standards;

B.3. - C. ...

AUTHORITY NOTE: Promulgated in accordance with R.S. 36:254 and Title XIX of the Social Security Act.

HISTORICAL NOTE: Promulgated by the Department of Health and Hospitals, Bureau of Health Services Financing and the Office of Aging and Adult Services, LR 37:3521 (December 2011), amended LR 39:321 (February 2013).

§8313. Caregiver Temporary Support Services

A. ...

B. Federal financial participation is not claimed for the cost of room and board except when provided as part of caregiver temporary support services furnished in a facility approved by the state that is not a private residence.

C. - F. ...

G. Caregiver temporary services may be utilized no more than 30 calendar days or 29 overnight stays per plan of care year for no more than 14 consecutive calendar days or 13 consecutive overnight stays. The service limit may be increased based on documented need and prior approval by OAAS.

H. ...

AUTHORITY NOTE: Promulgated in accordance with R.S. 36:254 and Title XIX of the Social Security Act.

HISTORICAL NOTE: Promulgated by the Department of Health and Hospitals, Bureau of Health Services Financing and the Office of Aging and Adult Services, LR 37:3521 (December 2011), amended LR 39:321 (February 2013).

§8315. Assistive Devices and Medical Supplies

A. Assistive devices and medical supplies are specialized medical equipment and supplies which include devices, controls, appliances, or nutritional supplements specified in the POC that enable participant to:

A.1. - H. ...

AUTHORITY NOTE: Promulgated in accordance with R.S. 36:254 and Title XIX of the Social Security Act.

HISTORICAL NOTE: Promulgated by the Department of Health and Hospitals, Bureau of Health Services Financing and the Office of Aging and Adult Services, LR 37:3521 (December 2011), amended LR 39:321 (February 2013).

§8321. Nursing Services

A. Nursing services are services that are medically necessary and may only be provided efficiently and effectively by a registered nurse or a licensed practical nurse working under the supervision of a registered nurse. These nursing services provided must be within the scope of the Louisiana statutes governing the practice of nursing.

B. - F. ...

AUTHORITY NOTE: Promulgated in accordance with R.S. 36:254 and Title XIX of the Social Security Act.

HISTORICAL NOTE: Promulgated by the Department of Health and Hospitals, Bureau of Health Services Financing and the Office of Aging and Adult Services, LR 37:3522 (December 2011), amended LR 39:321 (February 2013).

§8323. Skilled Maintenance Therapy

A. Skilled maintenance therapy is therapy services that may be received by community choices waiver participants in the home.

B. - D. ...

E. Services may be provided in a variety of locations including the participant's home or as approved by the POC planning team.

F. - F.3.i. ...

4. Respiratory therapy services which provide preventative and maintenance of airway-related techniques and procedures including:

F.4.a. - H. ...

AUTHORITY NOTE: Promulgated in accordance with R.S. 36:254 and Title XIX of the Social Security Act.

HISTORICAL NOTE: Promulgated by the Department of Health and Hospitals, Bureau of Health Services Financing and the Office of Aging and Adult Services, LR 37:3522 (December 2011), amended LR 39:321 (February 2013).

Chapter 85. Self-Direction Initiative

§8501. Self-Direction Service Option

A. The self-direction initiative is a voluntary, self-determination option which allows the participant to coordinate the delivery of personal assistance services through an individual direct support professional rather than through a licensed, enrolled provider agency. Selection of this option requires that the participant utilize a payment mechanism approved by the department to manage the required fiscal functions that are usually handled by a provider agency.

B. - C.2.d.ii. ...

iii. fails to provide required documentation of expenditures and related items;

iv. fails to cooperate with the fiscal agent or support coordinator in preparing any additional documentation of expenditures;

v. violates Medicaid Program rules or guidelines of the self-direction option; or

vi. fails to receive self-directed services for 90 days or more.

D. Employee Qualifications. All employees under the self-direction option must:

1. be at least 18 years of age on the date of hire; and

2. complete all training mandated by OAAS within the specified timelines.

AUTHORITY NOTE: Promulgated in accordance with R.S. 36:254 and Title XIX of the Social Security Act.

HISTORICAL NOTE: Promulgated by the Department of Health and Hospitals, Bureau of Health Services Financing and the Office of Aging and Adult Services, LR 37:3523 (December 2011), amended LR 39:321 (February 2013).

Chapter 87. Plan of Care

§8701. Plan of Care

A. The applicant and support coordinator have the flexibility to construct a plan of care that serves the participant's health and welfare needs. The service package provided under the POC shall include services covered under the community choices waiver in addition to services covered under the Medicaid state plan (not to exceed the established service limits for either waiver or state plan

services) as well as other services, regardless of the funding source for these services. All services approved pursuant to the POC shall be medically necessary and provided in a cost-effective manner. The POC shall be developed using a person-centered process coordinated by the support coordinator.

B. Reimbursement shall not be made for community choices waiver services provided prior to the department's, or its designee's, approval of the POC.

C. - C.1. ...

2. individual cost of each waiver service; and

3. the total cost of waiver services covered by the POC.

AUTHORITY NOTE: Promulgated in accordance with R.S. 36:254 and Title XIX of the Social Security Act.

HISTORICAL NOTE: Promulgated by the Department of Health and Hospitals, Bureau of Health Services Financing and the Office of Aging and Adult Services, LR 37:3524 (December 2011), amended LR 39:321 (February 2013).

Chapter 89. Admission and Discharge Criteria

§8901. Admission Criteria

A. - A.5. ...

B. Failure of the individual to cooperate in the eligibility determination, plan of care development process or to meet any of the criteria above shall result in denial of admission to the community choices waiver.

AUTHORITY NOTE: Promulgated in accordance with R.S. 36:254 and Title XIX of the Social Security Act.

HISTORICAL NOTE: Promulgated by the Department of Health and Hospitals, Bureau of Health Services Financing and the Office of Aging and Adult Services, LR 37:3524 (December 2011), amended LR 39:322 (February 2013).

§8903. Admission Denial or Discharge Criteria

A. - A.6. ...

7. The individual fails to cooperate in the eligibility determination or plan of care development processes or in the performance of the POC.

8. Failure on behalf of the individual to maintain a safe and legal environment.

9. ...

AUTHORITY NOTE: Promulgated in accordance with R.S. 36:254 and Title XIX of the Social Security Act.

HISTORICAL NOTE: Promulgated by the Department of Health and Hospitals, Bureau of Health Services Financing and the Office of Aging and Adult Services, LR 37:3524 (December 2011), amended LR 39:322 (February 2013).

Chapter 93. Provider Responsibilities

§9301. General Provisions

A. ...

B. The provider agrees to not request payment unless the participant for whom payment is requested is receiving services in accordance with the Community Choices Waiver Program provisions and the services have been prior authorized and actually provided.

C. Any provider of services under the community choices waiver shall not refuse to serve any individual who chooses their agency unless there is documentation to support an inability to meet the individual's health and welfare needs, or all previous efforts to provide service and supports have failed and there is no option but to refuse services.

C.1. - D. ...

E. Any provider of services under the community choices waiver shall not interfere with the eligibility, assessment, care plan development, or care plan monitoring processes with use of methods including, but not limited to:

1. harassment;

2. intimidation; or

3. threats against program participants or members of their informal support network, of DHH, or support coordination staff.

F. Any provider of services under the community choices waiver shall have the capacity and resources to provide all aspects of any service they are enrolled to provide in the specified service area.

AUTHORITY NOTE: Promulgated in accordance with R.S. 36:254 and Title XIX of the Social Security Act.

HISTORICAL NOTE: Promulgated by the Department of Health and Hospitals, Bureau of Health Services Financing and the Office of Aging and Adult Services, LR 37:3524 (December 2011), amended LR 39:322 (February 2013).

§9303. Reporting Requirements

A. Support coordinators and direct service providers are obligated to report, within specified time lines, any changes to the department that could affect the waiver participant's eligibility including, but not limited to, those changes cited in the denial or discharge criteria.

B. Support coordinators and direct service providers are responsible for documenting the occurrence of incidents or accidents that affect the health and welfare of the participant and for completing an incident report. The incident report shall be submitted to the department or its designee with the specified requirements within specified time lines.

AUTHORITY NOTE: Promulgated in accordance with R.S. 36:254 and Title XIX of the Social Security Act.

HISTORICAL NOTE: Promulgated by the Department of Health and Hospitals, Bureau of Health Services Financing and the Office of Aging and Adult Services, LR 37:3525 (December 2011), amended LR 39:322 (February 2013).

Chapter 95. Reimbursement

§9501. Reimbursement Methodology

A. - A.1.a. ...

b. for dates of service on or after November 1, 2012, personal assistance services furnished to two participants shall be reimbursed at 82.79 percent of the full rate for each participant;

c. for dates of service on or after November 1, 2012, personal assistance services furnished to three participants shall be reimbursed at 72.4 percent of the full rate for each participant;

2. in-home caregiver temporary support service when provided by a personal care services or home health agency;

3. caregiver temporary support services when provided by an adult day health care center; and

4. adult day health care services.

B. - C.1.c. ...

D. The following services shall be reimbursed at an established monthly rate:

1. support coordination;

2. transition intensive support coordination; and

3. monthly monitoring/maintenance for certain assistive devices/technology and medical supplies procedures.

E. - G. ...

H. Reimbursement shall not be made for community choices waiver services provided prior to the department's approval of the POC and release of prior authorization for the services.

I. Repealed.

AUTHORITY NOTE: Promulgated in accordance with R.S. 36:254 and Title XIX of the Social Security Act.

HISTORICAL NOTE: Promulgated by the Department of Health and Hospitals, Bureau of Health Services Financing and the Office of Aging and Adult Services, LR 37:3525 (December 2011), amended LR 39:322 (February 2013).

§9503. Direct Support Professionals Wage Enhancement

A. The minimum hourly rate paid to direct support professionals shall be at least the current federal minimum.

A.1 - B. Repealed.

AUTHORITY NOTE: Promulgated in accordance with R.S. 36:254 and Title XIX of the Social Security Act.

HISTORICAL NOTE: Promulgated by the Department of Health and Hospitals, Bureau of Health Services Financing and the Office of Aging and Adult Services, LR 37:3525 (December 2011), amended LR 39:323 (February 2013).

Implementation of the provisions of this Rule may be contingent upon the approval of the U.S. Department of Health and Human Services, Centers for Medicare and Medicaid Services (CMS), if it is determined that submission to CMS for review and approval is required.

Bruce D. Greenstein
Secretary

1302#102

RULE

Department of Health and Hospitals
Bureau of Health Services Financing

Inpatient Hospital Services
Free-Standing Psychiatric Hospitals
Low Income and Needy Care Collaboration
(LAC 50:V.959)

The Department of Health and Hospitals, Bureau of Health Services Financing has amended LAC 50:V.959 in the Medical Assistance Program as authorized by R.S. 36:254 and pursuant to Title XIX of the Social Security Act. This Rule is promulgated in accordance with the provisions of the Administrative Procedure Act, R.S. 49:950 et seq.

Title 50
PUBLIC HEALTH—MEDICAL ASSISTANCE
Part V. Hospital Services
Subpart 1. Inpatient Hospitals
Chapter 9. Non-Rural, Non-State Hospitals
Subchapter B. Reimbursement Methodology
§959. Inpatient Psychiatric Hospital Services

A. - J. …

K. Low Income and Needy Care Collaboration. Effective for dates of service on or after January 1, 2012, quarterly supplemental payments shall be issued to qualifying non-rural, non-state free-standing psychiatric hospitals for inpatient services rendered during the quarter. Maximum aggregate payments to all qualifying hospitals in this group shall not exceed the available upper payment limit per state fiscal year.

1. Qualifying Criteria. In order to qualify for the supplemental payment, the non-state free-standing psychiatric hospital must be affiliated with a state or local governmental entity through a low income and needy care collaboration agreement.

a. A non-state free-standing psychiatric hospital is defined as a free-standing psychiatric hospital which is owned or operated by a private entity.

b. A *low income and needy care collaboration agreement* is defined as an agreement between a hospital and a state or local governmental entity to collaborate for the purposes of providing healthcare services to low income and needy patients.

2. Each qualifying hospital shall receive quarterly supplemental payments for the inpatient services rendered during the quarter. Quarterly payment distribution shall be limited to one-fourth of the lesser of:

a. the difference between each qualifying hospital's inpatient Medicaid billed charges and Medicaid payments the hospital receives for covered inpatient psychiatric services provided to Medicaid recipients. Medicaid billed charges and payments will be based on a 12 consecutive month period for claims data selected by the department; or

b. for hospitals participating in the Medicaid Disproportionate Share Hospital (DSH) Program, the difference between the hospital's specific DSH limit and the hospital's DSH payments for the applicable payment period.

L. …

AUTHORITY NOTE: Promulgated in accordance with R.S. 36:254 and Title XIX of the Social Security Act.

HISTORICAL NOTE: Promulgated by the Department of Health and Hospitals, Office of the Secretary, Bureau of Health Services Financing, LR 34:876 (May 2008), amended by the Department of Health and Hospitals, Bureau of Health Services Financing, LR 35:1895 (September 2009), amended LR 36:1554 (July 2010), LR 36:2562 (November, 2010), LR 37:2162 (July 2011), LR 39:94 (January 2013), LR 39:323 (February 2013).

Implementation of the provisions of this Rule may be contingent upon the approval of the U.S. Department of Health and Human Services, Center for Medicare and Medicaid Services (CMS), if it is determined that submission to CMS for review and approval is required.

Bruce D. Greenstein
Secretary

1302#103

RULE

Department of Health and Hospitals
Bureau of Health Services Financing

Inpatient Hospital Services—Major Teaching Hospitals
Qualifying Criteria (LAC 50:V.1301-1309)

The Department of Health and Hospitals, Bureau of Health Services Financing has adopted LAC 50:V.1301-1309 in the Medical Assistance Program as authorized by R.S. 36:254 and pursuant to Title XIX of the Social Security Act. This Rule is promulgated in accordance with the provisions of the Administrative Procedure Act, R.S. 49:950 et seq.

Title 50
PUBLIC HEALTH—MEDICAL ASSISTANCE
Part V. Hospital Services
Subpart 1. Inpatient Hospital Services
Chapter 13. Teaching Hospitals
Subchapter A. General Provisions
§1301. Major Teaching Hospitals

A. The Louisiana Medical Assistance Program's recognition of a major teaching hospital is limited to facilities having a documented affiliation agreement with a Louisiana medical school accredited by the Liaison Committee on Medical Education (LCME). A major teaching hospital shall meet one of the following criteria:

1. be a major participant in at least four approved medical residency programs and maintain an intern and resident full-time equivalency of at least 15 filled positions. At least two of the programs must be in medicine, surgery, obstetrics/gynecology, pediatrics, family practice, emergency medicine or psychiatry; or

2. maintain an intern and resident full-time equivalency of at least 20 filled positions with an approved medical residency program in family practice located more than 150 miles from the medical school accredited by the LCME.

B. For the purposes of recognition as a major teaching hospital, a facility shall be considered a "major participant" in a graduate medical education program if it meets the following criteria. The facility must:

1. pay for all of the costs of the training program in the non-hospital or hospital setting, including:

a. the residents' salaries and fringe benefits;

b. the portion of the cost of teaching physicians' salaries and fringe benefits attributable to direct graduate medical education; and

c. other direct administrative costs of the program; and

2. participate in residency programs that:

a. require residents to rotate for a required experience;

b. require explicit approval by the appropriate residency review committee (RRC) of the medical school with which the facility is affiliated prior to utilization of the facility; or

c. provide residency rotations of more than one sixth of the program length or more than a total of six months at the facility and are listed as part of an accredited program in the *Graduate Medical Education Directory* of the Accreditation Council for Graduate Medical Education (ACGME).

AUTHORITY NOTE: Promulgated in accordance with R.S. 36:254 and Title XIX of the Social Security Act.

HISTORICAL NOTE: Promulgated by the Department of Health and Hospitals, Bureau of Health Services Financing, LR 39:324 (February 2013).

§1303. Minor Teaching Hospitals

A. The Louisiana Medical Assistance Program's recognition of a minor teaching hospital is limited to facilities having a documented affiliation agreement with a Louisiana medical school accredited by the LCME. A minor teaching hospital shall meet the following criteria:

1. must participate significantly in at least one approved medical residency program in either medicine, surgery, obstetrics/gynecology, pediatrics, family practice, emergency medicine or psychiatry; and

2. maintain an intern and resident full time equivalency of at least six filled positions.

B. For the purposes of recognition as a minor teaching hospital, a facility is considered to "participate significantly" in a graduate medical education program if it meets the following criteria. The facility must:

1. pay for all of the costs of the training program in the non-hospital or hospital setting, including:

a. the residents' salaries and fringe benefits;

b. the portion of the cost of teaching physicians' salaries and fringe benefits attributable to direct graduate medical education; and

c. other direct administrative costs of the program; and

2. participate in residency programs that:

a. require residents to rotate for a required experience;

b. require explicit approval by the appropriate residency review committee of the medical school with which the facility is affiliated prior to utilization of the facility; or

c. provide residency rotations of more than one sixth of the program length or more than a total of six months at the facility and are listed as part of an accredited program in the *Graduate Medical Education Directory* of the Accreditation Council for Graduate Medical Education.

i. If not listed, the sponsoring institution must have notified the ACGME, in writing, that the residents rotate through the facility and spend more than one-sixth of the program length or more than a total of six months at the facility.

AUTHORITY NOTE: Promulgated in accordance with R.S. 36:254 and Title XIX of the Social Security Act.

HISTORICAL NOTE: Promulgated by the Department of Health and Hospitals, Bureau of Health Services Financing, LR 39:324 (February 2013).

§1305. Approved Medical Residency Program

A. An approved medical residency program is one that meets one of the following criteria:

1. counts toward certification of the participant in a specialty or sub-specialty listed in the current edition of either *The Directory of Graduate Medical Education Programs* published by the American Medical Association, Department of Directories and Publications, or *The Annual Report and Reference Handbook* published by the American Board of Medical Specialties;

2. is approved by the ACGME as a fellowship program in geriatric medicine; or

3. is a program that would be accredited except for the accrediting agency's reliance upon an accreditation standard that requires an entity to perform an induced abortion or require, provide, or refer for training in the performance of induced abortions, or make arrangements for such training regardless of whether the standard provides exceptions or exemptions.

B. A residency program at a non-hospital facility may be counted by a hospital if:

1. there is a written agreement with the non-hospital facility that requires the hospital facility to pay for the cost of the training program; and

2. the agreement requires that the time that residents spend in the non-hospital setting is for patient care.

AUTHORITY NOTE: Promulgated in accordance with R.S. 36:254 and Title XIX of the Social Security Act.

HISTORICAL NOTE: Promulgated by the Department of Health and Hospitals, Bureau of Health Services Financing, LR 39:324 (February 2013).

§1307. Graduate Medical Education

A. The bureau adopts criteria for the reimbursement of graduate medical education (GME) in facilities that do not qualify as major or minor teaching facilities. GME recognized by the Medical Assistance Program for reimbursement shall be limited to facilities having a documented affiliation agreement with a Louisiana medical school accredited by the LCME.

B. Payment for GME costs shall be limited to the direct cost of interns and residents in addition to the teaching physician supervisory costs. Teaching physician supervisory costs shall be limited in accordance with the provisions of the Medicare provider reimbursement manual. The GME component of the rate shall be based on hospital specific graduate medical education Medicaid cost for the latest year on which hospital prospective reimbursements are rebased trended forward in accordance with the prospective reimbursement methodology for hospitals.

C. Hospitals implementing GME programs approved after the latest year on which hospital prospective reimbursements have been rebased shall have a GME component based on the first full cost reporting period that the approved GME program is in existence trended forward in accordance with the prospective reimbursement methodology for hospitals.

AUTHORITY NOTE: Promulgated in accordance with R.S. 36:254 and Title XIX of the Social Security Act.

HISTORICAL NOTE: Promulgated by the Department of Health and Hospitals, Bureau of Health Services Financing, LR 39:325 (February 2013).

§1309. Requirements for Reimbursement

A. Qualification for teaching hospital status or to receive reimbursement for GME costs shall be re-established at the beginning of each fiscal year.

B. To be reimbursed as a teaching hospital or to receive reimbursement for GME costs, a facility shall submit the following documentation to the Bureau of Health Services, Program Operations Section within 30 days of the beginning of each state fiscal year:

1. a copy of the executed affiliation agreement for the time period for which the teaching hospital status or GME reimbursement applies;

2. a copy of any agreements with non-hospital facilities; and

3. a signed certification for teaching hospital recognition.

C. Each hospital which is reimbursed as a teaching hospital or receives reimbursement for GME costs shall submit the following documentation to the Bureau of Health Services, Program Operations Section, within 90 days of the end of each state fiscal year:

1. a copy of the intern and resident information system report that is submitted annually to the Medicare intermediary; and

2. a copy of any notice given to the ACGME that residents rotate through a facility for more than one sixth of the program length or more than a total of six months.

D. Copies of all contracts, payroll records and time allocations related to graduate medical education must be maintained by the hospital and available for review by the state and federal agencies or their agents upon request.

E. No teaching hospital shall receive a per diem rate greater than 115 percent of its facility specific cost based on the latest rebasing year trended forward to the rate year in accordance with the prospective reimbursement methodology for hospitals.

F. The peer group maximum for minor teaching hospitals shall be the peer group maximum for minor teaching hospitals or the peer group maximum for peer group five, whichever is greater.

G. If it is subsequently discovered that a hospital has been reimbursed as a major or minor teaching hospital and did not qualify for that peer group for any reimbursement period, retroactive adjustment shall be made to reflect the correct peer group to which the facility should have been assigned. The resulting overpayment will be recovered through either immediate repayment by the hospital or recoupment from any funds due to the hospital from the department.

AUTHORITY NOTE: Promulgated in accordance with R.S. 36:254 and Title XIX of the Social Security Act.

HISTORICAL NOTE: Promulgated by the Department of Health and Hospitals, Bureau of Health Services Financing, LR 39:325 (February 2013).

Bruce D. Greenstein
Secretary

1302#104

RULE

Department of Health and Hospitals
Bureau of Health Services Financing

Intermediate Care Facilities for Persons with Developmental Disabilities—Public Facilities Reimbursement Methodology
(LAC 50:VII.32965-32969)

The Department of Health and Hospitals, Bureau of Health Services Financing has adopted LAC 50:VII.32965-32969 in the Medical Assistance Program as authorized by R.S. 36:254 and pursuant to Title XIX of the Social Security Act. This Rule is promulgated in accordance with the provisions of the Administrative Procedure Act, R.S. 49:950 et seq.

Title 50
PUBLIC HEALTH—MEDICAL ASSISTANCE
Part VII. Long Term Care
Subpart 3. Intermediate Care Facilities for Persons with Developmental Disabilities
Chapter 329. Reimbursement Methodology
Subchapter C. Public Facilities
§32965. State-Owned and Operated Facilities

A. Medicaid payments to state-owned and operated intermediate care facilities for persons with developmental

disabilities are based on the Medicare formula for determining the routine service cost limits as follows:

1. calculate each state-owned and operated ICF/DD's per diem routine costs in a base year;

2. calculate 112 percent of the average per diem routine costs; and

3. inflate 112 percent of the per diem routine costs using the skilled nursing facility (SNF) market basket index of inflation.

B. Each state-owned and operated facility's capital and ancillary costs will be paid by Medicaid on a "pass-through" basis.

C. The sum of the calculations for routine service costs and the capital and ancillary costs "pass-through" shall be the per diem rate for each state-owned and operated ICF/DD. The base year cost reports to be used for the initial calculations shall be the cost reports for the fiscal year ended June 30, 2002.

AUTHORITY NOTE: Promulgated in accordance with R.S. 36:254 and Title XIX of the Social Security Act.

HISTORICAL NOTE: Promulgated by the Department of Health and Hospitals, Bureau of Health Services Financing, LR 39:325 (February 2013).

§32967. Quasi-Public Facilities

A. Medicaid payment to quasi-public facilities is a facility-specific prospective rate based on budgeted costs. Providers shall be required to submit a projected budget for the state fiscal year beginning July 1.

B. The payment rates for quasi-public facilities shall be determined as follows:

1. determine each ICF/DD's per diem for the base year beginning July 1;

2. calculate the inflation factor using an average CPI index applied to each facility's per diem for the base year to determine the inflated per diem;

3. calculate the median per diem for the facilities' base year;

4. calculate the facility's routine cost per diem for the SFY beginning July 1 by using the lowest of the budgeted, inflated or median per diem rates plus any additional allowances; and

5. calculate the final approved per diem rate for each facility by adding routine costs plus any "pass through" amounts for ancillary services, provider fees, and grant expenses.

C. Providers may request a final rate adjustment subject to submission of supportive documentation and approval by the department.

AUTHORITY NOTE: Promulgated in accordance with R.S. 36:254 and Title XIX of the Social Security Act.

HISTORICAL NOTE: Promulgated by the Department of Health and Hospitals, Bureau of Health Services Financing, LR 39:326 (February 2013).

§32969. Transitional Rates for Public Facilities

A. Effective October 1, 2012, the department shall establish a transitional Medicaid reimbursement rate of $302.08 per day per individual for a public ICF/DD facility over 50 beds that is transitioning to a private provider, as long as the provider meets the following criteria:

1. shall have a fully executed cooperative endeavor agreement (CEA) with the Office for Citizens with Developmental Disabilities (OCDD) for the private operation of the facility;

2. shall have a high concentration of medically fragile individuals being served, as determined by the department;

a. for purposes of these provisions, a medically fragile individual shall refer to an individual who has a medically complex condition characterized by multiple, significant medical problems that require extended care;

3. incurs or will incur higher existing costs not currently captured in the private ICF/DD rate methodology; and

4. shall agree to downsizing and implement a pre-approved OCDD plan:

a. any ICF/DD home that is a cooperative endeavor agreement (CEA) to which individuals transition to satisfy downsizing requirements, shall not exceed 6-8 beds.

B. The transitional Medicaid reimbursement rate shall only be for the period of transition, which is defined as the term of the CEA or a period of three years, whichever is shorter.

C. The transitional Medicaid reimbursement rate is all-inclusive and incorporates the following cost components:

1. direct care staffing;
2. medical/nursing staff, up to 23 hours per day;
3. medical supplies;
4. transportation;
5. administrative; and
6. the provider fee.

D. If the community home meets the criteria in §32969.C and the individuals served require that the community home has a licensed nurse at the facility 24 hours per day, seven days per week, the community home may apply for a supplement to the transitional rate. The supplement to the rate shall not exceed $25.33 per day per individual.

E. The total transitional Medicaid reimbursement rate, including the supplement, shall not exceed $327.41 per day per individual.

F. The transitional rate and supplement shall not be subject to the following:

1. inflationary factors or adjustments;
2. rebasing;
3. budgetary reductions; or
4. other rate adjustments.

AUTHORITY NOTE: Promulgated in accordance with R.S. 36:254 and Title XIX of the Social Security Act.

HISTORICAL NOTE: Promulgated by the Department of Health and Hospitals, Bureau of Health Services Financing, LR 39:326 (February 2013).

Bruce D. Greenstein
Secretary

1302#105

RULE

Department of Health and Hospitals
Bureau of Health Services Financing

Outpatient Hospital Services
Non-Rural, Non-State Hospitals
Children's Specialty Hospitals
(LAC 50:V.5109)

The Department of Health and Hospitals, Bureau of Health Services Financing has adopted LAC 50:V.5109 in the Medical Assistance Program as authorized by R.S. 36:254 and pursuant to Title XIX of the Social Security Act. This Rule is promulgated in accordance with the provisions of the Administrative Procedure Act, R.S. 49:950 et seq.

Title 50
PULIC HEALTH—MEDICAL ASSISTANCE
Part V. Hospitals
Subpart 5. Outpatient Hospitals
Chapter 51. General Provisions
§5109. Children's Specialty Hospitals

A. In order to receive Medicaid reimbursement for outpatient services as a children's specialty hospital, the acute care hospital must meet the following criteria:

1. be recognized by Medicare as a prospective payment system (PPS) exempt children's specialty hospital;

2. does not qualify for Medicare disproportionate share hospital payments; and

3. has a Medicaid inpatient days utilization rate greater than the mean plus two standard deviations of the Medicaid utilization rates for all hospitals in the state receiving Medicaid payments.

AUTHORITY NOTE: Promulgated in accordance with R.S. 36:254 and Title XIX of the Social Security Act.

HISTORICAL NOTE: Promulgated by the Department of Health and Hospitals, Bureau of Health Services Financing, LR 39:327 (February 2013).

Implementation of the provisions of this Rule may be contingent upon the approval of the U.S. Department of Health and Human Services, Centers for Medicare and Medicaid Services (CMS), if it is determined that submission to CMS for review and approval is required.

Bruce D. Greenstein
Secretary

1302#106

RULE

Department of Natural Resources
Office of Coastal Management

Public Hearings and Notices (LAC 43:I.723, 727 and 728)

Under the authority of R.S. 49:214.21-49:214.41 and in accordance with the provisions of the Administrative Procedure Act, R.S. 49:950 et seq., the Department of Natural Resources, Office of Coastal Management, amends LAC 43:I.723 and 727 and adopts 43:I.728 relative to public notice of coastal use permits and related matters.

This Rule amendment is intended to clarify the description of public notice of coastal use permits and to provide for formal adoption of additional forms of dissemination of public notice.

Title 43
NATURAL RESOURCES
Part I. Office of the Secretary
Subpart 1. General
Chapter 7. Coastal Management
Subchapter C. Coastal Use Permits and Mitigation
§723. Rules and Procedures for Coastal Use Permits

A. - C.4.g. …

5. Public Notice and Consideration of Public Comment

a. Public notice of the receipt of all apparently complete applications for coastal use permits shall be given by posting or causing to be posted notices of application on the department's internet site. The administrator shall distribute copies of the application to all affected governmental bodies.

b. Notice by Publication. A public notice as provided in §728 of all apparently complete applications for coastal use permits will be published by the administrator or by the local government with an approved local coastal management program for uses of local concern. The public notice shall be published by the administrator at least one time in the official journal of the state and, for a use of local concern in a parish with an approved local program, by the local government one or more times in the official journal of the parish in which the activity is to be conducted. Notice shall be considered given upon publication in the official journal.

c. Contents of the notice of an apparently complete application for a coastal use permit should at a minimum contain the following:

i. the name and address of applicant;

ii. a brief description of the activity proposed in the application;

iii. the nature and location of the activity;

iv. the name and address of the administrators, or local governments, if the application is filed with a local government with an approved local coastal management program, representative to whom comments shall be submitted;

v. a statement that comments will be received for 25 days following publication; and

vi. a statement indicating that additional information is on file and may be inspected at any time during normal working hours, with copies available upon payment of a reasonable fee to cover costs of copying, handling, and mailing.

d. Additional Forms of Notice. The administrator, in his discretion, may require the applicant to undertake the following additional forms of public notice:

i. by posting or causing to be posted a copy of the application at the location of the proposed use; and

ii. by publishing notice of the application in media newspaper of general circulation in the parish or parishes in which the use would be located.

e. ...

f. The administrator shall maintain a current list of permits issued or denied during the previous month. This list will be posted on the department's internet site in the same

manner as notices of apparently complete applications for coastal use permits.

g. Notice by Mail. A copy of the public notice of all apparently complete applications for coastal use permits and the current list of permits issued or denied since the last mailing but no less than monthly will be mailed to each person on the public notice mailing list, pursuant to §728.

h. Notice by Electronic Transmission. A copy of the public notice of all apparently complete applications for coastal use permits and the monthly list of permits issued or denied will be sent to subscribers of the electronic public notice list, pursuant to §728.

i. The department shall maintain the public content of its current permit application files in the SONRIS system, so that those records are available for public inspection.

j. A copy of any public record, including the application, will be sent to any person requesting it upon payment of a reasonable fee to cover costs of copying, handling, and mailing, except that information of a confidential or proprietary nature shall be withheld. In the event that attachments to the application are not readily reproducible, they shall be available for inspection at the permitting office.

C.6. - H.9.b. …

AUTHORITY NOTE: Promulgated in accordance with R.S. 49:214.21-41.

HISTORICAL NOTE: Promulgated by the Department of Natural Resources, Office of the Secretary, LR 6:493 (August 1980), amended LR 8:519 (October 1982), amended by the Department of Natural Resources, Office of Coastal Restoration and Management, LR 16:625 (July 1990), amended by the Department of Natural Resources, Office of the Secretary, LR 21:835 (August 1995), amended by the Department of Natural Resources, Office of Coastal Restoration and Management, LR 28:516 (March 2002), amended by the Department of Natural Resources, Office of the Secretary, LR 35:2184 (October 2009), LR 35:2188 (October 2009), amended by the Department of Natural Resources, Office of Coastal Management, LR 39:327 (February 2013).

Subchapter E. Hearings and Public Notice

§727. Public Hearings and Public Notice

A. Scope. This regulation is applicable to all public hearings and public notices pursuant to the SLCRMA. All such public hearings that are determined to be necessary shall be nonadjudicatory public proceedings conducted for the purpose of acquiring information or evidence which will be considered in evaluating a proposed action, and will afford the public an opportunity to present their views and opinions on such action. Public notices shall provide the public with information regarding activities that require such notice.

B. Public Notice of Hearings

1. Public notice as provided in §728 shall be given at least 30 days in advance of any public hearings. Notice shall be sent to all persons requesting notices of public hearings and shall be posted in all governmental bodies having an interest in the subject matter of the hearing. Such notice may be limited in area consistent with the nature of the hearing.

B.2. - G. ...

AUTHORITY NOTE: Promulgated in accordance with R.S. 49:214.30.

HISTORICAL NOTE: Promulgated by the Department of Natural Resources, Office of the Secretary, LR 6:493 (August 1980), amended by the Department of Natural Resources, Office of Coastal Management, LR 39:328 (February 2013).

§728. Public Notice

A. Electronic Public Notice List. The Office of Coastal Management shall maintain the electronic public notice list, which shall contain the name and electronic address provided by all persons who request to receive public notice from the Office of Coastal Management via electronic transmission. Subscribers to the electronic public notice list will receive electronic notification by email or other widely available electronic means of dissemination used for distributing information electronically if the subscriber requests such other means be utilized and if such technology is being used by the Office of Coastal Management. The content of these transmissions will include: public notice of applications, notice of public hearings, notice of other agency actions, and items of general interest related to the programs of the Office of Coastal Management.

1. Procedure for Subscribing to the Electronic Public Notice List

a. Any interested person may request orally or in writing to be added or removed as a subscriber to the electronic public notice list.

b. Once the Office of Coastal Management receives the request, the interested party will be added to the electronic public notice list.

2. Maintenance of the Electronic Public Notice List

a. Periodically, but not more than twice per year, the Office of Coastal Management may send a request to subscribers of the electronic public notice list to verify their intention to remain a subscriber. The request may contain an "opt out" feature that allows the subscriber to request to be removed from the electronic public notice list.

b. Subscribers may be removed from the electronic public notice list anytime after one year after receipt of their latest request to be placed on the list, or upon a request from the subscriber to be removed from the list, whichever occurs first. Subscribers will be informed that they may be removed from the electronic public notice list anytime after one year after receipt of their latest request to be placed on the list at the time they request to be included on such list.

3. Automatic Removal from Public Notice Mailing List

a. A request to be added as a subscriber to the electronic public notice list will serve as a request for removal from the public notice mailing list, as described below.

B. Public Notice Mailing List. The Office of Coastal Management shall maintain a public notice mailing list of all interested persons who request to be subscribers to the public notice mailing list in order to receive notice of applications, public hearings, other agency action, and items of general interest related to the programs of the Office of Coastal Management via the United States Postal Service.

1. Procedure for Subscribing to the Public Notice Mailing List

a. Any person seeking to be added to the public notice mailing list shall submit a request orally or in writing.

b. Once the Office of Coastal Management receives the request, the interested party will be added to the public notice mailing list.

2. Maintenance of the Public Notice Mailing List

a. The fact that any correspondence or dispatch sent to any subscriber on the public notice mailing list, properly addressed with postage prepaid, is returned as unclaimed or undeliverable, may be regarded as evidence of the subscriber's intent to be removed from the public notice mailing list, and the subscriber may be removed from the public notice mailing list without further formality.

b. Subscribers may also be removed from the public notice mailing list anytime after one year after receipt of their latest request to be placed on the public notice mailing list or upon a request by the subscriber to be removed from such list, whichever occurs first. Subscribers will be informed that they may be removed from the public notice mailing list anytime after one year after receipt of their latest request to be placed on the list at the time they request to be included on such list.

c. Any subscriber found on the electronic public notice list shall be removed without further formality from the public notice mailing list.

C. Prior Mailing Lists

1. All mailing lists authorized under regulations in effect prior to the effective date of this regulation are terminated, and all subscriptions on those lists are converted to subscriptions to the public notice mailing list with a start date concurrent with the effective date of this regulation.

AUTHORITY NOTE: Promulgated in accordance with R.S. 49:214.21-41.

HISTORICAL NOTE: Promulgated by the Department of Natural Resources, Office of the Secretary, LR 6:493 (August 1980), amended LR 8:519 (October 1982), amended by the Department of Natural Resources, Office of Coastal Restoration and Management, LR 16:625 (July 1990), amended by the Department of Natural Resources, Office of the Secretary, LR 21:835 (August 1995), amended by the Department of Natural Resources, Office of Coastal Restoration and Management, LR 28:516 (March 2002), amended by the Department of Natural Resources, Office of the Secretary, LR 35:2184 (October 2009), LR 35:2188 (October 2009), amended by the Department of Natural Resources, Office of Coastal Management, LR 39:328 (February 2013).

Stephen Chustz
Interim Secretary

1302#013

RULE

Department of Public Safety and Corrections
Gaming Control Board

Truck Stop Travel Lanes (LAC 42:XI.2415)

The Louisiana Gaming Control Board, pursuant to R.S. 27:15 and R.S. 27:24, has amended LAC 42:XI.2415.

Title 42
LOUISIANA GAMING
Part XI. Video Poker
Chapter 24. Video Draw Poker
§2415. Gaming Establishments

A. - D.4. ...

a. Each new application shall contain a scale drawing of the qualified truck stop facility prepared by a registered civil engineer which indicates the overall dimension of the facility and parking area and upon which is superimposed the required areas and dimensions for 50 parking stalls measuring 12 feet wide and 65 feet long and for travel lanes located at or adjacent to the parking stalls measuring 50 feet wide at those facilities with two-way truck travel. At those facilities having one-way truck travel, the travel lane located at or adjacent to the parking stalls shall be 30 feet wide.

4.b. - 5.b. ...

c. All two-way truck travel lanes, shall be paved with concrete or asphalt, and be striped or marked so as to indicate lane division.

d. Traffic and inter-facility access connections shall be paved, marked and at least 25 feet wide for two-way truck traffic and at least 12 feet wide for one-way truck traffic. Construction shall be to industry standards and shall be designed to allow for safe maneuvering of tractor trailer vehicles.

6. The licensee has a continuing responsibility to maintain the dimensions of the parking area, minimum number of required parking spaces, access to all parking spaces, traffic and inter-facility access connections, and travel lanes in accordance with the Act and these rules. The licensee shall upon request provide to the division applicable documentation supporting the design and construction of the parking area in accordance with the Act and these rules.

E. - E.3. ...

AUTHORITY NOTE: Promulgated in accordance with L.S. 27:15 and 24.

HISTORICAL NOTE: Promulgated by the Department of Public Safety and Corrections, Office of the State Police, Gaming Enforcement Section, Video Gaming Division, LR 18:197 (February 1992), amended LR 21:582 (June 1995), amended by the Department of Public Safety and Corrections, Gaming Control Board, LR 23:1322 (October 1997), LR 24:1504 (August 1998), LR 26:1321 (June 2000), LR 36:2047 (September 2010), LR 39:329 (February 2013).

Dale A. Hall
Chairman

1302#017

RULE

Department of Revenue
Policy Services Division

Withholding by Professional Athletic Teams
(LAC 61:I.1520)

Editor's Note: This Rule is being repromulgated to correct a typographical error. The original Rule can be viewed in the January 20, 2013 edition of the *Louisiana Register* on pages 103-104.

Under the authority of R.S.47:1511, R.S.47:164(D) R.S.47:295 and R.S.47:114 and in accordance with the provisions of the Administrative Procedure Act, R.S. 49:950 et seq., the Department of Revenue, Policy Services Division amends LAC 61.I.1520.

Pursuant to Act 107 of the 2012 Regular Legislative Session relative to Returns and Payment of tax, this amendment makes the regulation consistent with the statute which provides that withholding returns are to be filed on a quarterly basis.

Title 61
REVENUE AND TAXATION
Part I. Taxes Collected and Administered by the Secretary of Revenue
Chapter 15. Income: Withholding Tax
§1520. Withholding by Professional Athletic Teams

A. - C. ...

D. Due Date of Withholding Return and Payment. A withholding payment must be submitted for each game played in Louisiana. The payment must be submitted on or before the last day of the month following the month in which the game was played. A withholding return must be submitted for each quarter in which a game was played in Louisiana to reconcile all payments made within that quarter. The withholding return must be submitted quarterly on or before the last day of the month following the quarter in which the game was played.

E. - H.3. …

AUTHORITY NOTE: Adopted in accordance with R.S. 39:100.1, R.S. 47:164(D), R.S. 47:295, R.S. 47:1511, R.S. 47: 114 and R.S. 47:1602.1.

HISTORICAL NOTE: Promulgated by the Department of Revenue, Policy Services Division, LR 30:91 (January 2004), amended LR 39:103 (January 2013), repromulgated LR 39:330 (February 2013).

Tim Barfield
Executive Counsel

1302#007

RULE

Department of Wildlife and Fisheries
Wildlife and Fisheries Commission

Reef Fish Harvest (LAC 76:VII.335)

The Wildlife and Fisheries Commission does hereby amend a Rule, LAC 76:VII.335, modifying existing reef fish harvest regulations. Authority for adoption of this Rule is included in R.S. 56:6(25)(a), 56:320.2, 56:326.1 and 56:326.3.

Title 76
WILDLIFE AND FISHERIES
Part VII. Fish and Other Aquatic Life
Chapter 3. Saltwater Sport and Commercial Fishery
§335. Reef Fish—Harvest Regulations

A. Recreational bag limits regarding the harvest of reef fish: triggerfishes, amberjacks, grunts, wrasses, snappers, groupers, sea basses, tilefishes, and porgies, within and without Louisiana's territorial waters.

Species	Recreational Bag Limits
1. Red Snapper	3 fish per person per day
[See Prior Text in 2-8]	

B. - F. …

* * *

G. Seasons

1. ...

* * *

2. Seasons for the recreational harvest of reef fish species or groups listed below shall be closed during the periods listed below.

Species or Group	Closed Season
[See Prior Text in a-b]	
c. Red Snapper	October 1 through the Friday before Palm Sunday of the following year. The open season shall be for weekends only. A weekend is defined as Friday, Saturday and Sunday, with the exception of Memorial Day and Labor Day, when Monday would be classified as a weekend as well.
d. Greater Amberjack	June 1 through July 31 of each year.

3. …

4. The provisions of §335.G apply to fish taken within or without Louisiana's territorial waters except for the season for the recreational harvest of red snapper, which is for Louisiana's territorial waters only.

5. The secretary of the Department of Wildlife and Fisheries is hereby authorized, upon notification to the chairman of the Wildlife and Fisheries Commission, to close, open, re-open or re-close any reef fish season as needed when informed of such by the National Marine Fisheries Service in order to maintain consistency with modifications in the adjacent federal waters, should the federal seasons be modified. The secretary may also modify those portions of this rule pertaining to red snapper recreational daily harvest limits and red snapper recreational seasons if NOAA-NMFS institutes sub-regional management for the species or if he deems it necessary, following notification of the chairperson of the Wildlife and Fisheries Commission.

H. - J. ...

AUTHORITY NOTE: Promulgated in accordance with R.S.56:6(25)(a), R.S. 56:320.2(C), R.S. 56:326.1 and R.S. 56:326.3.

HISTORICAL NOTE: Promulgated by the Department of Wildlife and Fisheries, Wildlife and Fisheries Commission, LR 16:539 (June 1990), amended LR 19:1442 (November 1993), LR 20:797 (July 1994), LR 21:1267 (November 1995), LR 22:860 (September 1996), LR 24:1138 (June 1998), LR 24:1139 (June 1998), LR 24:1972 (October 1998), LR 26:793 (April 2000), LR 26:1505 (July 2000), LR 26:2833 (December 2000), LR 31:3166 (December 2005), LR 33:1156 (June 2007), repromulgated LR 33:1397 (July 2007), amended LR 34:2209 (October 2008), LR 34:2682 (December 2008), LR 36:1791 (August 2010), LR 38:2383 (September 2012), LR 39:330 (February 2013).

Ronald "Ronny" Graham
Chairman

1302#034

RULE

Workforce Commission
Office of Workers' Compensation

Electronic Medical Billing and Payment Companion Guide
(LAC 40:I.305 and 306)

In accordance with R.S. 49:950 et seq., the Louisiana Workforce Commission, Office of Workers' Compensation, pursuant to the authority vested in the director of the Office of Workers' Compensation by R.S. 23:1310.1 and in accordance with applicable provisions of the Administrative provisions Act, has amended LAC 40:I.305 and 306. The amendments include:

Title 40
LABOR AND EMPLOYMENT
Part I. Workers' Compensation Administration
Subpart 1. General Administration
Chapter 3. Electronic Billing
§305. Formats for Electronic Medical Bill Processing

A. - F. …

G. The OWCA shall develop the electronic medical billing and payment companion guide found in Section 306 of this Chapter.

AUTHORITY NOTE: Promulgated in accordance with R.S. 23:1310.1.

HISTORICAL NOTE: Promulgated by the Louisiana Workforce Commission, Office of Workers Compensation Administration, LR 37:3543 (December 2011), amended by the Louisiana Workforce Commission, Office of Workers Compensation Administration, LR 39:331 (February 2013).

§306. Electronic Medical Billing and Payment Companion Guide

A. Introduction and Overview

1. HIPAA

a. The Administrative Simplification Act provisions of the federal Health Insurance Portability and Accountability Act of 1996 (HIPAA, Title II) include requirements that national standards for electronic health care transactions and national identifiers for health care providers (provider), health plans, and employers be established. These standards were adopted to improve the efficiency and effectiveness of the nation's health care system by encouraging the widespread use of electronic data interchange in health care. Additional information regarding the formats adopted under HIPAA is included in Chapter 2. Although workers compensation is excluded from HIPAA, these national standards encourage use of electronic medical billing for workers compensation claims in Louisiana.

2. Louisiana Workforce Commission, Office of Workers' Compensation-Electronic Billing

a. Louisiana Workforce Commission, Office of Workers' Compensation, R.S. 23:1203.2 mandates that carriers accept electronic bills for medical goods and services. Payers other than carriers (self-insured employers or self-insured funds) may participate in electronic medical billing but are not mandated as of this time. The rules also provide that the regulations which establish electronic billing rules be consistent with HIPAA to the extent possible. If participating in electronic medical billing, the health care provider, health care facility, or third-party biller/assignee shall use the HIPAA adopted electronic transaction formats outlined in Title 40:I.Chapter 3 to submit medical or pharmacy bills to the appropriate payer associated with the employer of the injured employee to whom the services are provided.

b. In workers' compensation, the payer is the party responsible for providing benefits on behalf of the employer of the injured employee to whom the services are due. The payer, or its authorized agent, is to validate the electronic data interchange (EDI) file according to the guidelines provided in the prescribed national standard format implementation guide, this companion guide, and the jurisdictional data requirements. Problems associated with the processing of the ASC X12 health care claim (837) EDI file are to be reported using acknowledgment transactions described in this companion guide. Problems associated with the processing of the NCPDP telecommunications D.0 bills are reported via the reject response transactions described in this companion guide. If mutually agreed upon, the payer will use the HIPAA-adopted electronic transaction formats to report explanations of payments, reductions, and denials to the health care provider, health care facility, or third-party biller/assignee. These electronic transaction formats include the ASC X12N/005010X221A1, health care claim payment/advice (835), and the NCPDP telecommunication D.0 paid response transaction or other formats pursuant to Title 40:I:Chapter 3.

c. Health care providers, health care facilities, or third-party biller/assignees, payers, clearinghouses, or other electronic data submission entities shall use this guideline in conjunction with the HIPAA-adopted ASC X12 type 3 technical reports (implementation guides) and the NCPDP telecommunication standard implementation guide version D.0. The ASC X12 type 3 technical reports (implementation guides) can be accessed by contacting the Accredited Standards Committee (ASC) X12, http://store.x12.org/store/. The NCPDP telecommunication standard implementation guide version D.0 is available from NCPDP at www.ncpdp.org.

d. This guide outlines jurisdictional procedures necessary for engaging in electronic data interchange (EDI) and specifies clarifications where applicable. When coordination of a solution is required, Louisiana Workforce Commission, Office of Workers' Compensation will work with the IAIABC EDI Medical Committee and Provider to Payer Subcommittee to coordinate with national standard setting organizations and committees to address workers' compensation needs.

B. Louisiana Workforce Commission, Office of Workers' Compensation Requirements

1. Compliance. If a billing entity chooses to submit bills electronically, it must also be able to receive an electronic response from the payer pursuant to Title 40:I.Chapter 3. The electronic responses include electronic acknowledgments (required) and electronic remittance advices (explanation of review) (where mutually agreed upon). Electronic billing rules allow for providers and payers to use agents to meet the requirement of electronic billing, but these rules do not mandate the method of connectivity, or the use of, or connectivity to, clearinghouses or similar types of vendors. Nothing in this document prevents the parties from utilizing electronic funds transfer (EFT) to facilitate payment of electronically submitted bills. Use of EFT is

governed by R.S. 23:1203.2(B)(2) and is not a pre-condition for electronic billing. If covered by R.S. 23:1203.2, health care providers, health care facilities, third-party biller/assignees, and payers must be able to exchange electronic bills in the prescribed standard formats and may exchange data in non-prescribed formats by mutual agreement. All jurisdictionally-required data content must be present in mutually agreed upon formats.

2. Agents. Electronic billing rules allow for health care providers and payers to use agents to accomplish the requirement of electronic billing. Payers and health care providers are responsible for the acts or omissions of their agents executed in the performance of services for their client's payer or health care provider.

3. Privacy, Confidentiality, and Security. Health care providers, health care facilities, third-party biller/assignees, payers, and their agents must comply with all applicable federal and Louisiana acts, codes, or rules related to the privacy, confidentiality, security or similar issues.

4. National Standard Formats

a. The national standard formats for billing, remittance, and acknowledgments are those adopted by the federal Department of Health and Human Services rules (45 CFR Parts 160 and 162). The formats adopted under Louisiana Workforce Commission, Office of Workers' Compensation, R.S. 23:1203.2, that are aligned with the current federal HIPAA implementation include:

i. ASC X12N/005010X222A1—health care claim: professional (837);

ii. ASC X12N/005010X223A2—health care claim: institutional (837);

iii. ASC X12N/005010X224A2—health care claim: dental (837);

iv. ASC X12N/005010X221A1—health care claim payment/advice (835);

v. ASC X12N/005010X212—health care claim status request and response (276/277);

vi. ASCX12N005010TA1—interchange acknowledgement;

vii. ASCX12C005010X231—implementation acknowledgment for health care insurance (999);

viii. ASCX12N005010X214—health care claim acknowledgment (277);

ix. NCPDP telecommunication standard implementation guide version D.0; and

x. NCPDP batch standard implementation guide 1.2.

b. These acknowledgment formats and the attachment format have not been adopted in the current HIPAA rules but are also based on ASC X12 standards.

i. The ASC X12N/005010X213request for additional information (277) is used to request additional attachments that were not originally submitted with the electronic medical bill.

ii. The ASC X12N/005010X210 Additional Information to Support a Health Care Claim or Encounter (275) is used to transmit electronic documentation associated with an electronic medical bill. The 005010X210 can accompany the original electronic medical bill, or may be sent in response to a 005010X213—request for additional information.

c. The NCPDP telecommunication standard implementation guide version D.0 contains the corresponding request and response messages to be used for pharmacy transactions.

5. Louisiana Workforce Commission, Office of Workers' Compensation Prescribed Formats

Format	Corresponding Paper Form	Function
005010X222A1	CMS-1500	Professional Billing
005010X223A2	UB-04	Institutional/Hospital Billing
005010X224A2	ADA-2006	Dental Billing
NCPDP D.0 and Batch 1.2	NCPDP WC/PC UCF	Pharmacy Billing
005010X221A1	None	Explanation of Review (EOR)
TA1 005010	None	Interchange Acknowledgment
005010X231	None	Transmission Level Acknowledgment
005010X214	None	Bill Acknowledgment

6. ASC X12 Ancillary Formats

a. Other formats not adopted by Louisiana Workforce Commission, Office of Workers' Compensation rule are used in ancillary processes related to electronic billing and reimbursement. The use of these formats is voluntary, and the companion guide is presented as a tool to facilitate their use in workers' compensation.

Format	Corresponding Process	Function
005010X210	Documentation/Attachments	Documentation/ Attachments
005010X213	Request for Additional Information	Request for Medical Documentation
005010X214	Health Claim Status Request and Response	Medical Bill Status Request and Response

7. Companion Guide Usage

a. Louisiana Workforce Commission, Office of Workers' Compensation workers' compensation implementation of the national standard formats aligns with HIPAA usage and requirements in most circumstances. This jurisdictional companion guide is intended to convey information that is within the framework of the ASC X12 type 3 technical reports (implementation guides) and NCPDP telecommunication standard implementation guide version D.0 adopted for use. This jurisdictional companion guide is not intended to convey information that in any way exceeds the requirements or usages of data expressed in the ASC X12 type 3 technical reports (implementation guides) or NCPDP telecommunication standard implementation guide version D.0. The jurisdictional companion guide, where applicable, provides additional instruction on situational implementation factors that are different in workers' compensation than in the HIPAA implementation.

b. When the workers' compensation application situation needs additional clarification or a specific code value is expected, the companion guide includes this information in a table format. Shaded rows represent

"segments" in the ASC X12 type 3 technical reports (implementation guides). Non-shaded rows represent "data elements" in the ASC X12 type 3 technical reports (implementation guides). An example is provided in the following table.

Loop	Segment or Element	Value	Description	Louisiana Workforce Commission, Office of Workers' Compensation Instructions
2000B	SBR		Subscriber Information	In workers' compensation, the Subscriber is the Employer.
	SBR04		Group or Plan Name	Required when the Employer Department Name/Division is applicable and is different than the Employer reported in Loop 2010BA NM103.
	SBR09	WC	Claim Filing Indicator Code	Value must be 'WC' to indicate workers' compensation bill.

c. Detailed information explaining the various components of the use of loops, segments, data elements, and conditions can be found in the appropriate ASC X12 type 3 technical reports (implementation guides).

d. The ASC X12 type 3 technical reports (implementation guides) also include elements that do not relate directly to workers' compensation processes, for example, coordination of benefits. If necessary, the identification of these loops, segments, and data elements can be described in the trading partner agreements to help ensure efficient processing of standard transaction sets.

8. Description of ASC X12 Transaction Identification Numbers. The ASC X12 transaction identification requirements are defined in the appropriate ASC X12 type 3 technical reports (implementation guides), available through the Accredited Standards Committee (ASC) X12, http://store.x12.org. The Louisiana Workforce Commission, Office of Workers' Compensation has provided the following additional information regarding transaction identification number requirements.

a. Sender/Receiver Trading Partner Identification. Workers' compensation standards require the use of the federal employer identification number (FEIN) or other mutually agreed upon identification numbers to identify trading partners (sender/receiver) in electronic billing and reimbursement transmissions. Trading partners will exchange the appropriate and necessary identification numbers to be reported based on the applicable transaction format requirements.

b. Payer Identification. Payers and their agents are also identified through the use of the FEIN or other mutually agreed upon identification number. Payer information is available through direct contact with the payer. The payer identification information is populated in loop 2010BB for 005010X222A1, 005010X223A2, and 005010X224A2 transactions.

i. Health care providers will need to obtain payer identification information from their connectivity trading partner agent (i.e. clearinghouses, practice management system, billing agent and/or other third party vendor) if they are not directly connecting to a payer.

c. Health Care Provider Identification. Health care provider roles and identification numbers are addressed extensively in the ASC X12 type 3 technical reports (implementation guides). However, it is noted that in the national transaction sets most health care providers are identified by the national provider identification number (NPI), and secondary identification numbers are generally not transmitted.

d. Injured Employee Identification. The injured employee is identified by name, Social Security number, date of birth, date of injury, and workers' compensation claim number (see below).

i. The injured employee (patient's) identification number is submitted using the property and casualty patient identifier REF segment in loop 2010CA.

e. Claim Identification. The workers' compensation claim number assigned by the payer is the claim identification number. This claim identification number is reported in the REF segment of loop 2010CA, property and casualty claim number.

i. The ASC X12N—technical report type 3 (implementation guides) instructions for the property and casualty claim number REF segments require the health care provider, health care facility, or third-party biller/assignee to submit the claim identification number in the 005010X222A1, 005010X223A2 and 005010X224A2 transactions.

f. Bill Identification. The ASC X12N technical report type 3 (implementation guides) refers to a bill as a "claim" for electronic billing transactions. This Louisiana Workforce Commission, Office of Workers' Compensation companion guide refers to these transactions as "bill" because in workers' compensation, a "claim" refers to the full case for a unique injured employee and injury. The health care provider, health care facility, or third-party biller/assignee, assigns a unique identification number to the electronic bill transaction. For 005010X222A1, 005010X223A2, and 005010224A2 transactions, the bill transaction identification number is populated in loop 2300 claim information CLM health claim segment CLM01 claim (bill) submitter's identifier data element. This standard HIPAA implementation allows for a patient account number but strongly recommends that submitters use a completely unique number for this data element on each individual bill.

g. Document/Attachment Identification. The 005010X210 is the standard electronic format for submitting electronic documentation and is addressed in a later chapter of the Louisiana Workforce Commission, Office of Workers' Compensation electronic billing and payment companion guide. Bills containing services that require supporting documentation as defined Louisiana Workforce Commission, Office of Workers' Compensation, R.S. 23:1203.2 must be properly annotated in the PWK attachment segment. Bill transactions that include services that require documentation and are submitted without the PWK annotation documentation will be rejected. Documentation to support electronic medical bills may be submitted by facsimile (fax), electronic mail (email), electronic transmission using the prescribed format, or by a mutually agreed upon format between providers and payers.

Documentation related to the electronic bill must be submitted within five business days of submission of the electronic medical bill and must identify the following elements:

i. patient name (injured employee);
ii. employer name (if available);
iii. payer name;
iv. date of service
v. date of injury
vi. claim number (if known);
vii. unique attachment indicator number.

h. The PWK segment and the associated documentation identify the type of documentation through the use of ASC X12 standard report type codes. The PWK segment and the associated documentation also identify the method of submission of the documentation through the use of ASC X12 report transmission codes. A unique attachment indicator number shall be assigned to all documentation. The attachment indicator number populated on the document shall include the report type code, the report transmission code, the attachment control qualifier (AC) and the attachment control number. For example, operative note (report type code OB) sent by fax is identified as OBFXAC12345. The combination of these data elements will allow a claim administrator to appropriately match the incoming attachment to the electronic medical bill.

9. Payer Validation Edits. Payers may apply validation edits based on Louisiana Workforce Commission, Workers' Compensation Office of Workers' Compensation ebill regulations, Louisiana electronic medical billing and payment companion guide and ASC X12N—technical reports type 3 (TR3s) requirements. Payers use the 005010X214 transaction, referred to in this companion guide as an acknowledgment, to communicate transaction (individual bill) rejections for ASC X12-based electronic medical bills. Error rejection codes are used to indicate the reason for the transaction rejection.

10. Description of Formatting Requirements. The ASC X12 formatting requirements are defined in the ASC X12 type 3 technical reports (implementation guides), appendices a.1, available through the Accredited Standards Committee (ASC) X12, http://store.x12.org. The Louisiana Workforce Commission, Office of Workers' Compensation has provided the following additional information regarding formatting requirements.

a. The NCPDP Telecommunication D.0 formatting requirements are defined in the NCPDP telecommunication standard implementation guide version D.0, available at http://www.ncpdp.org.

11. ASC X12—Hierarchical Structure. For information on how the ASC X12—hierarchical structure works, refer to section 2.3.2.1 HL segment of the ASC X12 type 3 technical reports (implementation guides), available through the Accredited Standards Committee (ASC) X12, http://store.x12.org.

12. Description of ASC X12 Transmission/Transaction Dates. The ASC X12 required transmission/transaction dates are defined in the ASC X12 type 3 technical reports (implementation guides) available through the Accredited Standards Committee (ASC) X12, http://store.x12.org. The Louisiana Workforce Commission, Office of Workers' Compensation has provided additional information regarding specific transmission/transaction identification requirements.

13. Date Sent/Invoice Date. In the manual paper medical bill processing model, the paper bill includes a date the bill was generated, to verify timely filing. For electronic billing, the invoice date is the date sent, which is reflected in the interchange control header ISA segment interchange date. the date in the control header ISA segment must be the actual date the transmission is sent.

14. Date Received. For medical bill processing purposes, the date received is the date the payer or its agent received the complete medical bill transaction. The date received is used to track timely processing of electronic bills, electronic reconsideration/appeal transactions, acknowledgment transactions, and timeliness of payments.

15. Paid Date. When the 005010X221A1 transaction set is used to electronically provide the remittance advice, the paid date is the date contained in BPR 16, check issue or EFT effective date, in the financial information segment.

16. Description of Code Sets. Code sets utilized in electronic billing and reimbursement and other ancillary processes are prescribed by the applicable ASC X12 type 3 technical reports (implementation guides), NCPDP Implementation Guide, Louisiana Workforce Commission, Office of Workers' Compensation rule, and this companion guide. The code sets are maintained by multiple standard setting organizations. Participants are required to utilize current valid codes based on requirements contained in the applicable implementation guide. The validity of the various codes may be based on the date of service (e.g., procedure and diagnosis codes) or based on the date of the electronic transaction (e.g., claim adjustment reason codes).

17. Participant Roles. Roles in the HIPAA implementation guides are generally the same as in workers' compensation. The employer, insured, injured employee, and patient are roles that are used differently in workers' compensation and are addressed later in this Section.

a. Trading Partner. Trading partners are entities that have established EDI relationships and that exchange information electronically either in standard or mutually agreed-upon formats. Trading partners can be both senders and receivers, depending on the electronic process involved (i.e. billing or acknowledgment).

b. Sender. A sender is the entity submitting a transmission to the receiver, or its trading partner. The health care provider, health care facility, or third-party biller/assignee, is the sender in the 005010X222A1, 005010X223A2 and 005010X224A2 electronic billing transactions. The payer, or its agent, is the sender in the 005010X214, 005010X231 or 005010X221A1 electronic acknowledgment or remittance transactions.

c. Receiver. A receiver is the entity that accepts a transmission submitted by a sender. The health care provider, health care facility, or third-party biller/assignee, is the receiver in the 005010X214, 005010X231 or 005010X221A1 electronic acknowledgment or remittance transactions. The payer, or its agent, is the receiver in the 005010X222A1, 005010X223A2, and 005010X224A2 electronic billing transactions.

d. Employer. The Employer, as the policyholder of the workers' compensation insurance coverage or covered

through self-insurance, is considered the subscriber in the workers' compensation implementation of the HIPAA electronic billing and reimbursement formats.

e. Subscriber. The subscriber or insured is the individual or entity that purchases or is covered by an insurance policy or covered through self-insurance. In this implementation, the workers' compensation insurance policy or self-insurance contract is obtained by the Employer, who is considered the subscriber.

f. Insured. The insured or subscriber is the individual or entity that purchases or is covered by an insurance policy or self-insurance contract. In group health, the insured may be the patient, the spouse or the parent of the patient. In this workers' compensation implementation, the Employer is considered the insured entity.

g. Injured Employee. In workers' compensation, the Injured Employee, as the person who has been injured on the job or has a work related illness, is always considered to be the patient. Thus, the relationship between the insured and the patient is always an employer/employee relationship, as opposed to group health, where there are many possible relationships a patient may have to the insured. For example, in a group health setting, the patient may be the insured, or may be the child or spouse of the insured, but the child or spouse of the injured employee will never be a covered patient in workers' compensation.

h. Patient. The patient is the person receiving medical services. In the workers' compensation implementation of electronic billing and reimbursement processes, the patient is considered the Injured Employee.

18. Health Care Provider Agent/Payer Agent Roles. Electronic billing and reimbursement rules include provisions that allow for providers and payers to utilize agents to comply with the electronic billing (eBill) requirements. Billing agents, third party administrators, bill review companies, software vendors, data collection agents, and clearinghouses are examples of companies that may have a role in eBill. Payers and health care providers are responsible for the acts or omissions of their agents executed in the performance of services for the payer or health care provider. Under the eBill rules, carriers must be able to receive medical billing from health care providers. Payers may establish direct electronic connections to health care providers or may use agents to perform eBill functions. The rules do not mandate the use of, or regulate the costs of, agents performing eBill functions. Providers and payers are not required by Louisiana Workforce Commission, Office of Workers' Compensation rule to establish connectivity with a clearinghouse or to utilize a specific media/method of connectivity (i.e. Secured File Transfer Protocol [SFTP]). By mutual agreement, use of non-standard formats between the health care provider, health care facility, or third-party biller/assignee and the payer is permissible. The eBill rules do not regulate the formats utilized between providers and their agents, or payers and their agents, or the method of connectivity between those parties.

19. Duplicate, Appeal/Reconsideration, and Corrected Bill Resubmissions

a. Claim Resubmission Code-837 Billing Formats. Health care providers will identify resubmissions of prior medical bills (not including duplicate original submissions) by using the Claim Frequency Type Code of 7 (Resubmission/Replacement). The value is populated in loop 2300 claim information CLM health claim segment CLM05-3 claim frequency type code of the 005010X222A1, 005010X223A2 and 005010X224A2 electronic billing transactions. When the payer has provided the payer claim control number it had assigned to the bill being replaced, the health care provider must also use this number in its response to the previous bill submission. This information is populated in loop 2300 claim information REF payer claim control number of the 005010X222A1, 005010X223A2 and 005010X224A2 electronic billing transactions.

i. On electronically submitted medical bills, health care providers must also populate the appropriate NUBC Condition Code to identify the type of resubmission. Condition codes provide additional information to the payer when the resubmitted bill is a request for reconsideration or a new submission after receipt of a decision from the Louisiana Workforce Commission, Office of Workers' Compensation or other administrative proceeding, such as a judicial review. Based on the instructions for each bill type, the Condition Code is submitted in the HI Segment for 005010X222A1 and 005010X223A2 transactions and in the NTE Segment for the 005010X224A2 transaction. (The use of the NTE segment is at the discretion of the sender.)

ii. The Reconsideration Claim Frequency Type Code '7' is used in conjunction with the payer claim control number that the claim administrator had assigned to the bill in response to the previous bill submission. This information is populated in loop 2300 claim information REF payer claim control number of the 005010X222A1, 005010X223A2, and 005010X224A2 electronic billing transactions. The NUBC Instruction for the use of Claim Frequency Type Codes can be referenced on the NUBC website at http://www.nubc.org/FL4forWeb2_RO.pdf. The CMS-required bill processing documentation for adjustments can be referenced at http://www.cms.hhs.gov/manuals/downloads/clm104c01.pdf.

b. Duplicate Bill Transaction Prior To Payment

i. A Condition Code 'W2' (Duplicate of the original bill) is required when a provider submits a bill that is a duplicate. The Condition Code is submitted based on the instructions for each bill type. It is submitted in the HI segment for professional and institutional transactions and in the NTE segment for dental transactions. (The use of the NTE segment is at the discretion of the sender.) The duplicate bill must be identical to the original bill, with the exception of the added Condition Code. No new dates of service or itemized services may be included on the duplicate bill.

Duplicate Bill Transaction
• CLM05-3 = Identical value as original. Cannot be '7'. • Condition codes in HI/K3 are populated with a condition code qualifier 'BG' and code value: 'W2' = Duplicate. • NTE Example: NTE*ADD*BGW2 • Payer Claim Control Number does not apply. • The resubmitted bill must be identical to the original bill, except for the 'W2' condition code. No new dates of service or itemized services may be included on the duplicate bill.

ii. A health care Duplicate bill transaction shall be submitted no earlier than 30 calendar days after the payer has acknowledged receipt of a complete electronic bill

transaction or prior to receipt of a 005010X221A1 transaction.

iii. The payer may reject a bill transaction with a Condition Code W2 indicator if

(a). the duplicate bill is received within thirty (30) calendar days after acknowledgment;

(b). the bill has been processed and the 005010X221A1 transaction has been generated; or

(c). the payer does not have a corresponding accepted original transaction with the same bill identification numbers.

iv. If the payer does not reject the duplicate bill transaction within two business days, the duplicate bill transaction may be denied for the reasons listed above through the use of the 005010X221A1 transaction or through a non-electronic EOR process.

c. Corrected Bill Transactions

i. A replacement bill is sent when a data element on the original bill was either not previously sent or needs to be corrected.

ii. When identifying elements change, the correction is accomplished by a void and re-submission process: a bill with CLM05-3 = '8' (Void) must be submitted to cancel the incorrect bill, followed by the submission of a new original bill with the correct information.

iii. Billers should not replace or void a prior bill until that prior submitted bill has reached final adjudication status, which can be determined from the remittance advice, a web application, when showing a finalized code under claim status category 277, or by non-electronic means.

Corrected Bill Transaction
• CLM05-3 = '7' indicates a replacement bill. • Condition codes of 'W2' to 'W5' in HI/K3 are not used. • REF*F8 includes the Payer Claim Control Number, if assigned by the payer. • A corrected bill shall include the original dates of service and the same itemized services rendered as the original bill. • When identifying elements change, the correction is accomplished by a void and re-submission process. A bill with CLM05-3 = '8' (Void) must be submitted to cancel the incorrect bill, followed by the submission of a new original bill with the correct information.

iv. The payer may reject a revised bill transaction if

(a). the payer does not have a corresponding adjudicated bill transaction with the same bill identification number; or

(b). there is incorrect billing documentation for an adjustment based on CMS guidelines (inappropriate changed data).

v. If the payer does not reject the revised bill transaction within two business days, the revised bill transaction may be denied for the reasons listed above through the use of the 005010X221A1 transaction or through a non-electronic EOR process.

d. Appeal/Reconsideration Bill Transactions. Appeal/reconsideration of disputed disbursements and denials are outlined and detailed in LAC 40, Chapter 51, §5149 and R.S. 23:1034.2(F). Additional information can also be found on the Louisiana Workforce Commission, Office of Workers' Compensation website, www.laworks.net/WorkersComp/OWC_MainMenu.asp.

20. Balance Forward Billing. Balance forward bills are bills that are either for a balance carried over from a previous bill or are for a balance carried over from a previous bill along with charges for additional services. Balance forward billing is not permissible.

21. Louisiana Workforce Commission, Office of Workers' Compensation and Workers' Compensation Specific Requirements. The requirements in this section identify Louisiana Workforce Commission, Office of Workers' Compensation workers' compensation specific requirements that apply to more than one electronic format. Requirements that are related to a specific format are identified in the chapter related to that format.

a. Claim Filing Indicator. The claim filing indicator code for workers' compensation is 'WC' populated in loop 2000B subscriber information, SBR subscriber information segment field SBR09 for the 005010X222A1, 005010X223A2, or 005010X224A2 transactions.

b. Transaction Set Purpose Code. The transaction set purpose code in the transaction set header BHT beginning of hierarchical transaction segment field BHT02 in 005010X222A1, 005010X223A2, or 005010X224A2 transactions is designated as '00' original. Payers are required to acknowledge acceptance or rejection of transmissions (files) and transactions (bills). Transmissions that are rejected by the payer and then corrected by the provider are submitted, after correction, as '00' original transmissions.

c. Transaction Type Code. The transaction type code in the transaction set header BHT beginning of hierarchical transaction segment field BHT06 in 005010X222A1, 005010X223A2, or 005010X224A2 transactions is designated as 'CH' chargeable. Currently, health care providers are not required to report electronic billing data to the Louisiana Workforce Commission, Office of Workers' Compensation. Therefore, code 'RP' (reporting) is not appropriate for this implementation.

d. Louisiana Workers' Compensation Specific Requirements that Relate to Multiple Electronic. The requirements in this section identify Louisiana workers' compensation specific requirements that apply to more than one electronic format. Requirements that are related to a specific format are identified in the chapter related to that format.

e. NCPDP Telecommunication Standard D.0 Pharmacy Formats. Issues related to electronic pharmacy billing transactions are ad dressed in chapter 6 companion guide NCPDP D.0 pharmacy.

Loop	Segment	Description	Louisiana Companion Guide Workers' Compensation Comments or Instructions
1000A	PER	Submitter EDI Contact Information	Communication Number Qualifier must be 'TE'—Telephone Number
2000B	SBR	Subscriber Information	In workers' compensation, the Subscriber is the Employer.
2000B	SBR04	Name	In workers' compensation, the group name is the employer of the patient/employee.
2000B	SBR09	Claim Filing Indicator Code	Value must be 'WC' for workers' compensation.

Loop	Segment	Description	Louisiana Companion Guide Workers' Compensation Comments or Instructions
2010BA		Subscriber Name	In workers' compensation, the Subscriber is the Employer.
2010BA	NM102	Entity Type Qualifier	Value must be '2' non-person.
2010BA	NM103	Name Last or Organization Name	Value must be the name of the Employer.
2010BA	REF	Property and Casualty Claim Number	Enter the claim number if known, If not known, then enter the default value of "unknown".
2000C	PAT01	Individual Relationship Code	Value must be '20' Employee.
2010CA	REF	Property and Casualty Claim Number	Enter the claim number if known. If not known, then enter the default value of "unknown".
2010CA	REF	Property and Casualty Patient Identifier	Required.
2010CA	REF01	Reference Identification Qualifier	Value must be 'SY'. (Social Security Number)
2010CA	REF02	Reference Identification	Value must be the patient's Social Security Number. When applicable, utilize '999999999' as a default value where the social security number is not known.
2300	CLM11	Related Causes Information	One of the occurrences in CLM11 must have a value of 'EM'—Employment Related.
2300	DTP	Date -- Accident	Required when the condition reported is for an occupational accident/injury.
2300	DTP	Date – Disability Dates	Do not use Segment. Leave blank.
2300	DTP	Date – Property And Casualty Date Of First Contact	Do not use Segment. Not Applicable to LA regulations
2300	PWK	Claim Supplemental Information	Refer to the companion guide for instruction regarding Documentation/Medical Attachment Requirements.
2300	PWK01	Report Type Code	Use appropriate 005010 Report Type Code.
2300	PWK06	Attachment Control Number	Enter the Attachment Control Number Example PWK*OB*BM***AC*DMN 0012~
2300	K3	File Information	State Jurisdictional Code is expected here.
2300	K301	Fixed Format Information	Jurisdiction State Code (State of Compliance Code) Required when the provider knows the state of Jurisdiction is different than the billing provider's state (2010AA/N4/N402). Enter the state code qualifier 'LU' followed by the state code. For example, 'LULA' indicates the medical bill is being submitted under Louisiana medical billing requirements.
2300	HI	Condition Information	For workers' compensation purposes, the National Uniform Billing Committee and the National Uniform Claims Committee has approved the following condition code (W2) for resubmission of a duplicate of the original bill. • W2—Duplicate of the original bill Note: Do not use condition codes when submitting revised or corrected bills.

C. Companion Guide ASC X12N/005010X222A1—Health Care Claim: Professional (837)

1. Introduction and Overview. The information contained in this companion guide has been created for use in conjunction with the ASC X12N/005010X222A1—health care claim: professional (837) technical report type 3. It is not to be considered a replacement for the ASC X12N/005010X222A1—health care claim: professional (837) technical report type 3, but rather is to be used as an additional source of information. This companion guide is not, nor was it ever intended to be, a comprehensive guide to the electronic transaction requirements for each of the Jurisdictions. The companion guide is intended to be used by Jurisdictions to develop and publish companion guides tailored to their regulatory environment that consistently apply the syntactical requirements of the ASC X12 type 3 technical reports. The ASC X12N/005010X222A1—health care claim: professional (837) technical report type 3 is available through the Accredited Standards Committee (ASC) X12, http://store.x12.org.

2. Purpose, Applicability, and Expected Implementation Date. The purpose of electronic billing (LAC40:IChapter 3) is to provide a framework for electronic billing, processing, and payment of medical services and products provided to an injured employee and data reporting subject to R.S. 23:1203.2, mandated for insurance carriers, beginning July 1, 2013 for electronic submissions.

3. Trading Partner Agreements. The components of trading partner agreements that define other transaction parameters beyond the ones described in this companion guide (such as transmission parameters) remain the same; this companion guide is not intended to replace any of those components. The data elements transmitted as part of a trading partner agreement must, at a minimum, contain all the same required data elements found within the ASC X12 type 3 technical reports and the jurisdiction-specific companion guide. The trading partner agreement must not change the workers' compensation field value designations as defined in the jurisdiction-specific companion guide.

4. Workers' Compensation Health Care Claim: Professional Instructions. Instructions for Louisiana-specific requirements are also provided in Louisiana Workers' Compensation Requirements. The following table identifies the application/ instructions for Louisiana workers' compensation that need clarification beyond the ASC X12 type 3 technical reports.

ASC X12N/005010X222A1			
Loop	**Segment**	**Description**	**Louisiana Companion Guide Workers' Compensation Comments or Instructions**
1000A	PER	Submitter EDI Contact Information	Communication Number Qualifier must be 'TE' – Telephone Number
2000B	SBR	Subscriber Information	In workers' compensation, the Subscriber is the Employer.
2000B	SBR04	Name	In workers' compensation, the group name is the employer of the patient/employee.
2000B	SBR09	Claim Filing Indicator Code	Value must be 'WC' for workers' compensation.
2010BA		Subscriber Name	In workers' compensation, the Subscriber is the Employer.
2010BA	NM102	Entity Type Qualifier	Value must be '2' non-person.
2010BA	NM103	Name Last or Organization Name	Value must be the name of the Employer.
2010BA	REF	Property And Casualty Claim Number	Enter the claim number if known, If not known, then enter the default value of "unknown".
2000C	PAT01	Individual Relationship Code	Value must be '20' Employee.
2010CA	REF	Property and Casualty Claim Number	Enter the claim number if known. If not known, then enter the default value of "unknown".
2010CA	REF	Property and Casualty Patient Identifier	Required.
2010CA	REF01	Reference Identification Qualifier	Value must be 'SY'. (Social Security Number)
2010CA	REF02	Reference Identification	Value must be the patient's Social Security Number. When applicable, utilize '999999999' as a default value where the social security number is not known.
2300	CLM11	Related Causes Information	One of the occurrences in CLM11 must have a value of 'EM' -- Employment Related.
2300	DTP	Date -- Accident	Required when the condition reported is for an occupational accident/injury.
2300	DTP	Date – Disability Dates	Do not use Segment. Leave blank.
2300	DTP	Date – Property And Casualty Date Of First Contact	Do not use Segment . Not Applicable to LA regulations
2300	PWK	Claim Supplemental Information	Refer to the companion guide for instruction regarding Documentation/Medical Attachment Requirements.
2300	PWK01	Report Type Code	Use appropriate 005010 Report Type Code.
2300	PWK06	Attachment Control Number	Enter the Attachment Control Number Example PWK*OB*BM***AC*DMN0012~
2300	K3	File Information	State Jurisdictional Code is expected here.
2300	K301	2300	Jurisdiction State Code (State of Compliance Code) Required when the provider knows the state of Jurisdiction is different than the billing provider's state (2010AA/N4/N402). Enter the state code qualifier 'LU' followed by the state code. For example, 'LULA' indicates the medical bill is being submitted under Louisiana medical billing requirements.
	HI	Condition Information	For workers' compensation purposes, the National Uniform Billing Committee and the National Uniform Claims Committee has approved the following condition code (W2) for resubmission of a duplicate of the original bill. • W2 - Duplicate of the original bill Note: Do not use condition codes when submitting revised or corrected bills.

D. Companion Guide ASC X12N/005010X223A2 Health Care Claim: Institutional (837)

1. Introduction and Overview. The information contained in this companion guide has been created for use in conjunction with the *ASC X12N/005010X223A2 Health Care Claim: Institutional (837) Technical Report Type 3*. It is not a replacement for the *ASC X12N/005010X223A2 Health Care Claim: Institutional (837) Technical Report Type 3*, but rather is an additional source of information. This companion guide is not, nor was it ever intended to be, a comprehensive guide to the electronic transaction requirements for each of the Jurisdictions. The companion guide is intended to be used by Jurisdictions to develop and publish companion guides tailored to their regulatory environment that consistently apply the syntactical requirements of the ASC X12 type 3 technical reports. The ASC X12N/005010X223A2—health care claim: institutional (837) technical report type 3 is available through the Accredited Standards Committee (ASC) X12, http://store.x12.org.

2. Purpose, Applicability and Expected Implementation Date. The purpose of electronic billing

(LAC40:IChapter 3) is to provide a framework for electronic billing, processing, and payment of medical services and products provided to an injured employee and data reporting subject to R.S. 23:1203.2, mandated for insurance carriers, beginning July 1, 2013 for electronic submissions.

3. Trading Partner Agreements. The components of trading partner agreements that define other transaction parameters beyond the ones described in this companion guide (such as transmission parameters) remain the same; this companion guide is not intended to replace any of those components. The data elements transmitted as part of a trading partner agreement must, at a minimum, contain all the same required data elements found within the ASC X12 type 3 technical reports and the jurisdiction-specific companion guide. The workers' compensation field value designations as defined in the jurisdiction-specific companion guide must remain the same as part of any trading partner agreement.

4. Workers' Compensation Health Care Claim: Institutional Instructions. Instructions for Louisiana specific requirements are also provided in Louisiana Workers' Compensation Requirements. The following table identifies the application/instructions for Louisiana workers' compensation that need clarification beyond the ASC X12 type 3 technical reports.

ASC X12N/005010X223A2			
Loop	**Segment**	**Description**	**Louisiana Companion Guide Workers' Compensation Comments or Instructions**
1000A	PER	Submitter EDI Contact Information	Communication Number Qualifier must be 'TE' – Telephone Number
2000B	SBR	Subscriber Information	In workers' compensation, the Subscriber is the Employer.
2000B	SBR04	Name	In workers' compensation, the group name is the employer of the patient/employee.
2000B	SBR09	Claim Filing Indicator Code	Value must be 'WC' for workers' compensation.
2010BA		Subscriber Name	In workers' compensation, the Subscriber is the Employer.
2010BA	NM102	Entity Type Qualifier	Value must be '2' non-person.
2010BA	NM103	Name Last or Organization Name	Value must be the name of the Employer.
2010BA	REF	Property and Casualty Claim Number	Enter the claim number if known. If not known, then enter the default value of "unknown".
2000C	PAT01	Individual Relationship Code	Value must be '20' Employee.
2010CA	REF02	Property Casualty Claim Number	Enter the claim number if known. If not known, then enter the default value of "unknown".
2010CA	REF	Property and Casualty Patient Identifier	Required.
2010CA	REF01	Reference Identification Qualifier	Value must be 'SY'. (Social Security Number)
2010CA	REF02	Reference Identification	Value must be the patient's Social Security Number.
2300	PWK	Claim Supplemental Information	Refer to the Jurisdiction companion guide for instruction regarding Documentation/Medical Attachment Requirements.
2300	PWK01	Report Type Code	Use appropriate 005010 Report Type Code.
2300	PWK06	Attachment Control Number	Enter the Attachment Control Number Example: PWK*OB*BM***AC*DMN0012~
2300	K3	File Information	State Jurisdictional Code is expected here.
2300	K301	Fixed Format Information	Required when the provider knows the state of Jurisdiction is different than the billing provider's state (2010AA/N4/N402). Enter the state code qualifier 'LU' followed by the state code. For example, 'LULA' indicates the medical bill is being submitted under Louisiana medical billing requirements.
2300	HI01	Occurrence Information	At least one Occurrence Code must be entered with value of '04' - Accident/Employment Related or '11' -- illness. The Occurrence Date must be the Date of Occupational Injury or Illness.
2300	HI	Condition Information	For workers' compensation purposes, the National Uniform Billing Committee and the National Uniform Claims Committee has approved the following condition code (W2) for resubmissions of a duplicate of the original bill. • W2 - Duplicate of the original bill Note: Do not use condition codes when submitting revised or corrected bills.

E. Companion Guide ASC X12N/005010X224A2 Health Care Claim: Dental (837)

1. Introduction and Overview. The information contained in this companion guide has been created for use in conjunction with the ASC X12N/05010X224A2—health care claim: dental (837) technical report type 3. It is not a replacement for the ASC X12N/05010X224A2—health care claim: dental (837) technical report type 3, but rather is an additional source of information. This companion guide is not, nor was it ever intended to be, a comprehensive guide to the electronic transaction requirements for each of the Jurisdictions. The companion guide is intended to be used by Jurisdictions to develop and publish companion guides tailored to their regulatory environment that consistently apply the syntactical requirements of the ASC X12 type 3 technical reports. The ASC X12N/05010X224A2—health care claim: dental (837) technical report type 3 is available through the Accredited Standards Committee (ASC) X12, http://store.x12.org.

2. Purpose, Applicability and Expected Implementation Date. The purpose of electronic billing (LAC40:IChapter 3) is to provide a framework for electronic billing, processing, and payment of medical services and products provided to an injured employee and data reporting subject to R.S. 23:1203.2, mandated for insurance carriers, beginning July 1, 2013 for electronic submissions.

3. Trading Partner Agreements. The components of trading partner agreements that define other transaction parameters beyond the ones described in this companion guide (such as transmission parameters) remain the same; this companion guide is not intended to replace any of those components. The data elements transmitted as part of a trading partner agreement must, at a minimum, contain all the same required data elements found within the ASC X12 type 3 technical reports and the jurisdiction-specific companion guide. The workers' compensation field value designations as defined in the Jurisdiction-specific companion guide must remain the same as part of any trading partner agreement.

4. Workers' Compensation Health Care Claim: Dental Instructions. Instructions for Louisiana specific requirements are also provided in Louisiana Workers' Compensation Requirements. The following table identifies the application/instructions for Louisiana workers' compensation that need clarification beyond the ASC X12 type 3 technical reports.

Loop	Segment	Description	Louisiana Companion Guide Workers' Compensation Comments or Instructions
1000A	PER	Submitter EDI Contact Information	Communication Number Qualifier must be 'TE' – Telephone Number
2000B	SBR	Subscriber Information	In workers' compensation, the Subscriber is the Employer.
2000B	SBR04	Name	In workers' compensation, the group name is the employer of the patient/employee.
2000B	SBR09	Claim Filing Indicator Code	Value must be 'WC' for workers' compensation.
2010BA		Subscriber Name	In workers' compensation, the Subscriber is the Employer.
2010BA	NM102	Entity Type Qualifier	Value must be '2' non-person.
2010BA	NM103	Name Last Or Organization Name	Value must be the name of the Employer.
2010BA	REF	Property And Casualty Claim Number	Enter the claim number if known. If not known, then enter the default value of "unknown".
2000C	PAT01	Individual Relationship Code	Value must be '20' Employee.
2010CA	REF02	Property Casualty Claim Number	Enter the claim number if known. If not known, then enter the default value of "unknown".
2300	CLM11	Related Causes Information	One of the occurrences in CLM11 must have a value of 'EM' -- Employment Related.
2010CA	REF	Property And Casualty Patient Identifier	Required.
2010CA	REF01	Reference Identification Qualifier	Value must be 'SY'. (Social Security Number)
2010CA	REF02	Reference Identification	Value must be the patient's Social Security Number.
2300	DTP	Date – Accident	Required when the condition reported is for an occupational accident/injury.
2300	PWK	Claim Supplemental Information	Refer to the Jurisdiction companion guide for instruction regarding Documentation/Medical Attachment Requirements.
2300	PWK01	Report Type Code	Use appropriate 005010 Report Type Code.
2300	PWK06	Attachment Control Number	Enter Attachment Control Number Example: PWK*OB*BM***AC*DMN0012~
2300	K3	File Information	State Jurisdictional Code is expected here.
2300	K301	Fixed Format Information	Jurisdiction State Code (State of Compliance Code) Required when the provider knows the state of Jurisdiction is different than the billing provider's state (2010AA/N4/N402). Enter the state code qualifier 'LU' followed by the state code. For example, 'LULA' indicates the medical bill is being submitted under Louisiana medical billing requirements.

F. Companion Guide NCPDP D.0 Pharmacy

1. Introduction and Overview. The information contained in this companion guide has been created for use in conjunction with the *NCPDP telecommunication standard implementation guide version D.0* for pharmacy claim transactions. It is not a replacement for the *NCPDP telecommunication standard implementation guide version D.0*, but rather is an additional source of information. Pharmacy transactions are processed both in real-time and via batch. Every transmission request has a transmission response. To address the appropriate process for responding to request transactions and reversal processing, users are directed to utilize the *NCPDP telecommunication standard implementation guide version D.0* and *Batch Standard Implementation Guide Version 1.2*. This companion guide is not, nor was it ever intended to be, a comprehensive guide to the electronic transaction requirements for each of the Jurisdictions. The companion guide is intended to be used by Jurisdictions to develop and publish companion guides tailored to their regulatory environment that consistently apply the syntactical requirements of the NCPDP Implementation Guide. The implementation guide for electronic pharmacy claims and responses is available through the National Council for Prescription Drug Programs (NCPDP) at http://www.ncpdp.org.

2. Purpose, Applicability and Expected Implementation Date. The purpose of electronic billing (LAC40:IChapter 3) is to provide a framework for electronic billing, processing, and payment of medical services and products provided to an injured employee and data reporting subject to R.S. 23:1203.2, mandated for insurance carriers, beginning July 1, 2013 for electronic submissions.

3. Trading Partner Agreements. The components of trading partner agreements that define other transaction parameters beyond the ones described in this companion guide (such as transmission parameters) remain the same; this companion guide is not intended to replace any of those components. The data elements transmitted as part of a trading partner agreement must, at a minimum, contain all the same required data elements found within the NCPDP Implementation Guide and the Jurisdiction-specific companion guide. The workers' compensation field value designations as defined in the Jurisdiction-specific companion guide must remain the same as part of any trading partner agreement. Where a payer has a separate contract with a Pharmacy Benefits Manager (PBM), the data elements exchanged between the payer and PBM may be in a mutually agreed upon format.

4. Workers' Compensation NCPDP Pharmacy Claim Instructions. Instructions for Louisiana specific requirements are also provided in Louisiana Workers' Compensation Requirements. The following table identifies the application/instructions for Louisiana workers' compensation that need clarification beyond the *NCPDP telecommunication standard implementation guide version D.0*.

Segment	Field	Description	Louisiana Companion Guide Workers' Compensation Comments or Instructions
Insurance	3Ø2-C2	Cardholder ID	If the Cardholder ID is not available or not applicable, the value must be 'NA'."
Claim	415-DF	Number of Refills Authorized	This data element is optional.
Pricing	426-DQ	Usual and Customary Charge	This data element is optional.
Pharmacy Provider	465-EY	Provider ID Qualifier	This data element is required. The value must be '05' – NPI Number.
Prescriber	466-EZ	Prescriber ID Qualifier	This data element is required. The value must be '01' – NPI Number, however, if prescriber NPI is not available, enter applicable prescriber ID qualifier.
Workers' Compensation			The Workers' Compensation Segment is required for workers' compensation claims
Workers' Compensation	435-DZ	Claim/Reference ID	Enter the claim number if known. If not known, then enter the default value of "unknown".
Clinical			This data element is optional.
Additional Documentation			The Additional Documentation segment can be utilized for any additional information that does not have a required field above.

G. Companion Guide ASC X12N/005010X221A1 Health Care Claim Payment/Advice (835)

1. Introduction and Overview. The information contained in this companion guide has been created for use in conjunction with the *ASC X12N/005010X221A1 Health Care Claim Payment Advice (835) Technical Report Type 3*. It is not a replacement for the *ASC X12N/005010X221A1 Health Care Claim Payment Advice (835) Technical Report Type 3*, but rather is an additional source of information. This companion guide is not, nor was it ever intended to be, a comprehensive guide to the electronic transaction requirements for each of the Jurisdictions. The companion guide is intended to be used by Jurisdictions to develop and publish companion guides tailored to their regulatory environment that consistently apply the syntactical requirements of the ASC X12 type 3 technical reports. The ASC X12N/005010X221A1—health care claim payment advice (835) technical report type 3 is available through the Accredited Standards Committee (ASC) X12, http://store.x12.org. The NCPDP ASC X12N 835 (005010X221)—pharmacy remittance advice template, is available at http://www.ncpdp.org/public_documents.asp.

2. Purpose, Applicability and Expected Implementation Date. The purpose of electronic billing (LAC40:IChapter 3) is to provide a framework for electronic billing, processing, and payment of medical services and products provided to an injured employee and data reporting subject to R.S. 23:1203.2, mandated for insurance carriers, beginning July 1, 2013 for electronic submissions. Electronic remittance notification is not mandated at this time and may be used upon mutual agreement of the parties.

3. Trading Partner Agreements. The components of trading partner agreements that define other transaction parameters beyond the ones described in this companion guide (such as transmission parameters) remain the same; this companion guide is not intended to replace any of those components. The data elements transmitted as part of a trading partner agreement must at a minimum contain all the same required data elements found within the ASC X12 type 3 technical reports and the jurisdiction-specific companion guide. The workers' compensation field value designations as defined in the Jurisdiction-specific companion guide must remain the same as part of any trading partner agreement. Trading partner agreements pertaining to claims adjustment group codes and claim adjustment reason code/remittance advice remark code combinations must follow the current ASC X12N—technical report type 2 (TR2) code value usage in health care claim payments and subsequent claims reference model, that identifies usage standards when providing payment, reduction, or denial information. The TR2 is available at http://store.x12.org.

4. Claim Adjustment Group Codes. The 005010X221A1 transaction requires the use of claim adjustment group codes. The most current valid codes must be used as appropriate for workers' compensation. The claim adjustment group code represents the general category of payment, reduction, or denial. For example, the group code 'CO' (contractual obligation) might be used in conjunction with a claim adjustment reason code for a network contract reduction. The claim adjustment group code transmitted in the 005010X221A1 transaction is the same code that is transmitted in the IAIABC 837 medical state reporting EDI reporting format. Louisiana Workforce Commission, Office of Workers Compensation accepts claim adjustment group codes that were valid on the date the payer paid or denied a bill.

5. Claim Adjustment Reason Codes. The 005010X221A1 transaction requires the use of claim adjustment reason codes (CARC) codes as the electronic means of providing specific payment, reduction, or denial information. As a result, use of the 005010X221A1 transaction eliminates the use of proprietary reduction codes, jurisdiction-specific claim adjustment reason codes, and free form text used on paper explanation of review (EOR) forms. Claim adjustment reason codes are available through Washington Publishing Company at www.wpc-edi.com/codes. The ASC X12N—technical report type 2 (TR2) code value usage in health care claim payments and subsequent claims reference model is the encyclopedia of claim adjustment group codes, claim adjustment reason code (CARC) and remittance advice remark code (RARC) combinations. The most current TR2 specified CARC and/or CARC RARC code combinations are to be used when providing payment, reduction, or denial information. The TR2 is available at http://store.x12.org. There is a great amount of variability in the mapping and combinations of codes used in the industry today. This results in different interpretations by the providers for each payer. TheTR2 defines CARC/RARC combinations which will provide a concrete and predictable message allowing the providers to set up rules to automate actions based upon the combinations of codes. Consistent use of these codes across all payers will result in significant administrative simplification in the workers' compensation industry. Every three months codes are added, modified or deleted through the ASC X12 external code committee process. These changes are maintained by ASC X12 and are updated in the TR2. If it is determined that a code, or CARC/RARC combination, needs to be added, modified or deleted, contact the IAIABC EDI Medical Committee to submit your request at www.IAIABC.org/.

6. Remittance Advice Remark Codes. The 005010X221A1 transaction supports the use of remittance advice remark codes to provide supplemental explanations for a payment, reduction, or denial already described by a claim adjustment reason code. NCPDP reject codes are allowed for NCPDP transactions. Payers must use the remittance remark codes to provide additional information to the health care provider regarding why a bill was adjusted or denied. The use of the 005010X221A1 transaction eliminates the use of proprietary reduction codes and free form text used on paper explanation of review (EOR) forms. Remittance advice remark codes are not associated with a group or reason code in the same manner that a claim adjustment reason code is associated with a group code. Currently, the 005010X221A1 is an optional transaction to be used upon mutual agreement by the payer and healthcare provider. Remittance advice remark codes are available through Washington Publishing Company at http://www.wpc-edi.com/codes.

7. Product/Service ID Qualifier. The product/service identification number transmitted in the inbound electronic billing format is returned in the 005010X221A1 transaction

SVC service payment information segment with the appropriate qualifier.

8. Workers' Compensation Health Care Claim Payment/Advice Instructions. Instructions for Louisiana-specific requirements are also provided in Louisiana Workers' Compensation Requirements. The following table identifies the application/instructions for Louisiana workers' compensation requirements that need clarification beyond the ASC X12 type 3 technical reports. Currently, the 005010X221A1 is an optional transaction to be used upon mutual agreement by the payer and healthcare provider.

ASC X12N/005010X221A1				
Loop	**Segment or Element**	**Value**	**Description**	**Louisiana Companion Guide Workers' Compensation Comments or Instructions**
1000A	PER		Payer Technical Contact Information	
	PER03	TE	Communication Number Qualifier	Value must be 'TE' Telephone Number
	PER04		Communication Number	Value must be the Telephone Number of the submitter.
2100	CLP		Claim Level Data	
	CLP06	WC	Claim Filing Indicator Code	Value must be "WC"–Workers' Compensation
	CLP07		Payer Claim Control Number	The payer-assigned claim control number for workers' compensation use is the bill control number.

H. Companion Guide ASC X12N/005010X210 Additional Information to Support a Health Care Claim or Encounter (275)

1. Introduction and Overview. The information contained in this companion guide has been created for use in conjunction with the ASC X12N/005010X210—additional information to support a health care claim or encounter (275) technical report type 3. It is not a replacement for the ASC X12N/005010X210—additional information to support a health care claim or encounter (275) technical report type 3, but rather is an additional source of information. This companion guide is not, nor was it ever intended to be, a comprehensive guide to the electronic transaction requirements for each of the jurisdictions. The companion guide is intended to be used by jurisdictions to develop and publish companion guides tailored to their regulatory environment that consistently apply the syntactical requirements of the ASC X12N type 3 technical reports. The ASC X12N/005010X210—additional information to support a health care claim or encounter (275) technical report type 3 is available through the Accredited Standards Committee (ASC) X12, http://store.x12.org.

2. Purpose, Applicability, and Expected Implementation Date. The purpose of electronic billing (LAC40:IChapter 3) is to provide a framework for electronic billing, processing, and payment of medical services and products provided to an injured employee and data reporting subject to R.S. 23:1203.2, mandated for insurance carriers, beginning July 1, 2013 for electronic submissions.

3. Method of Transmission. The 005010X210 transaction is the prescribed standard electronic format for submitting electronic documentation. Health care providers, health care facilities, or third party biller/assignees and payers may agree to exchange documentation in other non-prescribed electronic formats (such as uploading to a web-based system) by mutual agreement. If trading partners mutually agree to use non-prescribed formats for the documentation they exchange, they must include all components required to identify the information associated with the documentation. Health care providers, health care facilities, or third party biller/assignees and payers may also elect to submit documentation associated with electronic bill transactions through facsimile (fax) or electronic mail (email) in accordance electronic billing (LAC40:I. Chapter 3). Health care providers, health care facilities, or third party biller/assignees and payers must be able to electronically exchange medical documentation that is required to be submitted with the bill based on the regulatory requirements found in electronic billing (LAC 40.I.Chapter 3).

4. Documentation Requirements. Medical documentation includes, but is not limited to, medical reports and records, such as evaluation reports, narrative reports, assessment reports, progress report/notes, clinical notes, hospital records, and diagnostic test results. Documentation requirements for Louisiana workers' compensation billing are defined in electronic billing (LAC 40.I.Chapter 3).

I. Companion Guide Acknowledgments

1. There are several different acknowledgments that a clearinghouse and/or payer may use to respond to the receipt of a bill. The purpose of these acknowledgments is to provide feedback on the following:

a. Basic file structure and the trading partner information from the interchange header.

b. Detailed structure and syntax of the actual bill data as specified by the X12 standard.

c. The content of the bill against the jurisdictional complete bill rules.

d. Any delays caused by claim number indexing/validation.

e. Any delays caused by attachment matching.

f. The outcome of the final adjudication, including reassociation to any financial transaction.

2. Bill Acknowledgment Flow and Timing Diagrams. The process chart below illustrates how a receiver validates and processes an incoming 005010X222A1, 005010X223A2, or 005010X224A2 transaction. The diagram shows the basic acknowledgments that the receiver generates, including acknowledgments for validation and final adjudication for those bills that pass validation.

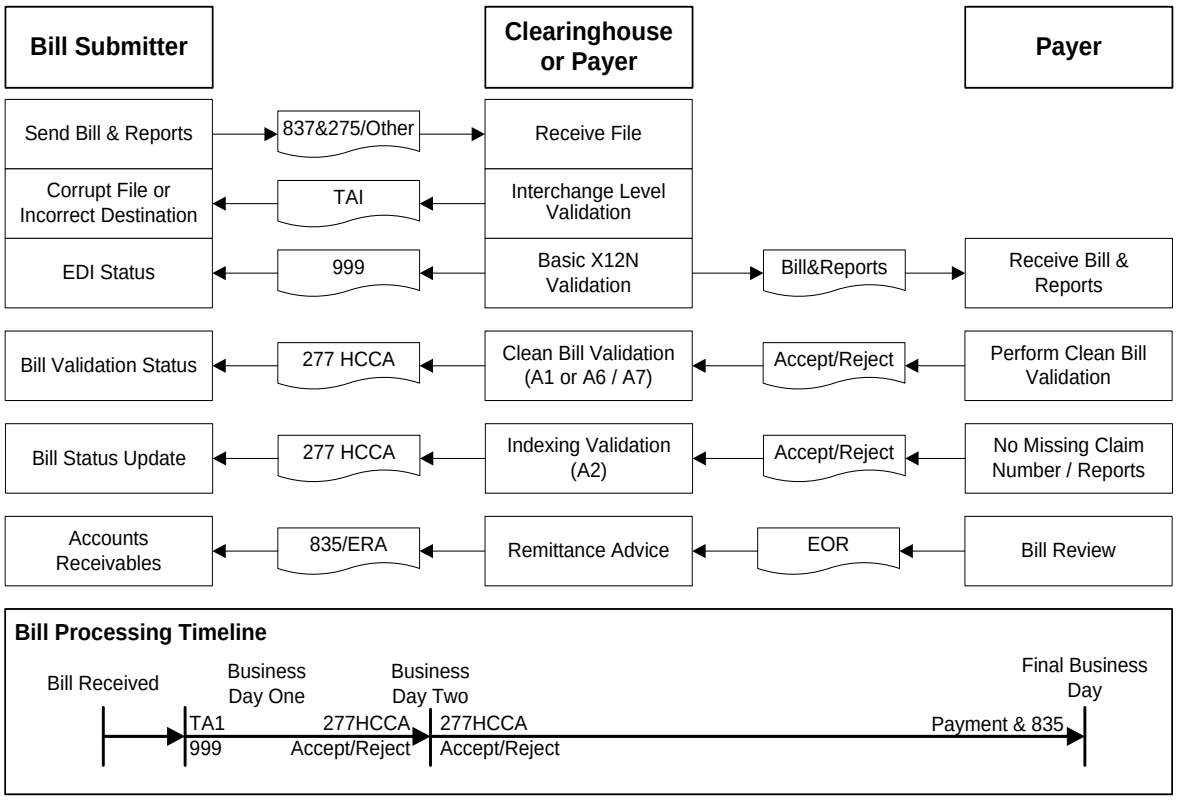

3. Process Steps

a. Interchange Level Validation. Basic file format and the trading partner information from the Interchange Header are validated. If the file is corrupt or is not the expected type, the file is rejected. If the trading partner information is invalid or unknown, the file is rejected. A TA1 (interchange acknowledgment) is returned to indicate the outcome of the validation. A rejected EDI file is not passed on to the next step.

b. Basic X12 Validation. A determination will be made as to whether the transaction set contains a valid 005010X222A1. A 005010X231 (functional acknowledgment) will be returned to the submitter. The 005010X231 contains "accept" or "reject" information. If the file contains syntactical errors, the locations of the errors are reported. Bills that are part of a rejected transaction set are not passed on to the next step.

c. Clean Bill Validation. The jurisdictional and payer specific edits are run against each bill within the transaction set. The receiver returns a 005010X214 (health care claim acknowledgment) to the submitter to acknowledge that the bill was accepted or rejected. Bills that are rejected are not passed on to the next step.

d. Clean Bill-Missing Claim Number and/or Missing Required Report. Refer to section 9.2, clean claim-missing claim number pre-adjudication hold (pending) status and section 9.3, clean claim-missing report pre-adjudication hold (pending) status regarding bill acknowledgment flow and timeline diagrams.

e. Bill Review. The bills that pass through bill review and any post-bill review approval process will be reported in the 005010X221A1 (remittance payment/advice). The 005010X221A1 contains the adjudication information from each bill, as well as any paper check or EFT payment information. Currently, the 005010X221A1 is an optional transaction to be used upon mutual agreement by the payer and healthcare provider.

4. Clean Bill-Missing Claim Number Pre-Adjudication Hold (Pending) Status

a. One of the processing steps that a bill goes through prior to adjudication is verification that the bill concerns an actual employment-related condition that has been reported to the employer and subsequently reported to the claims administrator. This process, usually called "claim indexing/validation" can cause a delay in the processing of the bill. Once the validation process is complete, the claim administrator assigns a claim number to the injured worker's claim. This claim number is necessary for the proper processing of any bills associated with the claim. Until the claim number is provided to the bill submitter, it cannot be included on the 005010X222A1, 005010X223A2, and 005010X224A2 submission to the payer. In order to prevent medical bills from being rejected due to lack of a claim number, a pre-adjudication hold (pending) period of up to five business days is mandated to enable the payer to attempt to match the bill to an existing claim in its system. If the bill cannot be matched within the five business days, the bill may be rejected as incomplete. If the payer is able to match

the bill to an existing claim, it must attach the claim number to the transaction and continue the adjudication process. The payer then provides the claim number to the bill submitter using the 005010X214 for use in future billing. The 005010X214 is also used to inform the bill submitter of the delay and the ultimate resolution of the issue. Due to the pre-adjudication hold (pend) status, a payer may send one STC segment with up to three claim status composites (STC01, STC10, and STC11) in the 005010X214. When a clean claim has a missing claim number and a missing report, the one STC segment in the 005010X214 would have the following three claim status composites: STC01, STC10, and STC11.

i. An example: STC*A1:21*20090830*WQ*70******A1:629*A1:294~

b. When a clean bill is only missing a claim number or missing a report, the one STC segment in the 005010X214 would have the following two claim status composites: STC01 and STC10.

i. An example: STC*A1:21*20090830*WQ*70******A1:629~

c. A bill submitter could potentially receive two 005010X214 transactions as a result of the pre-adjudication hold (pend) status.

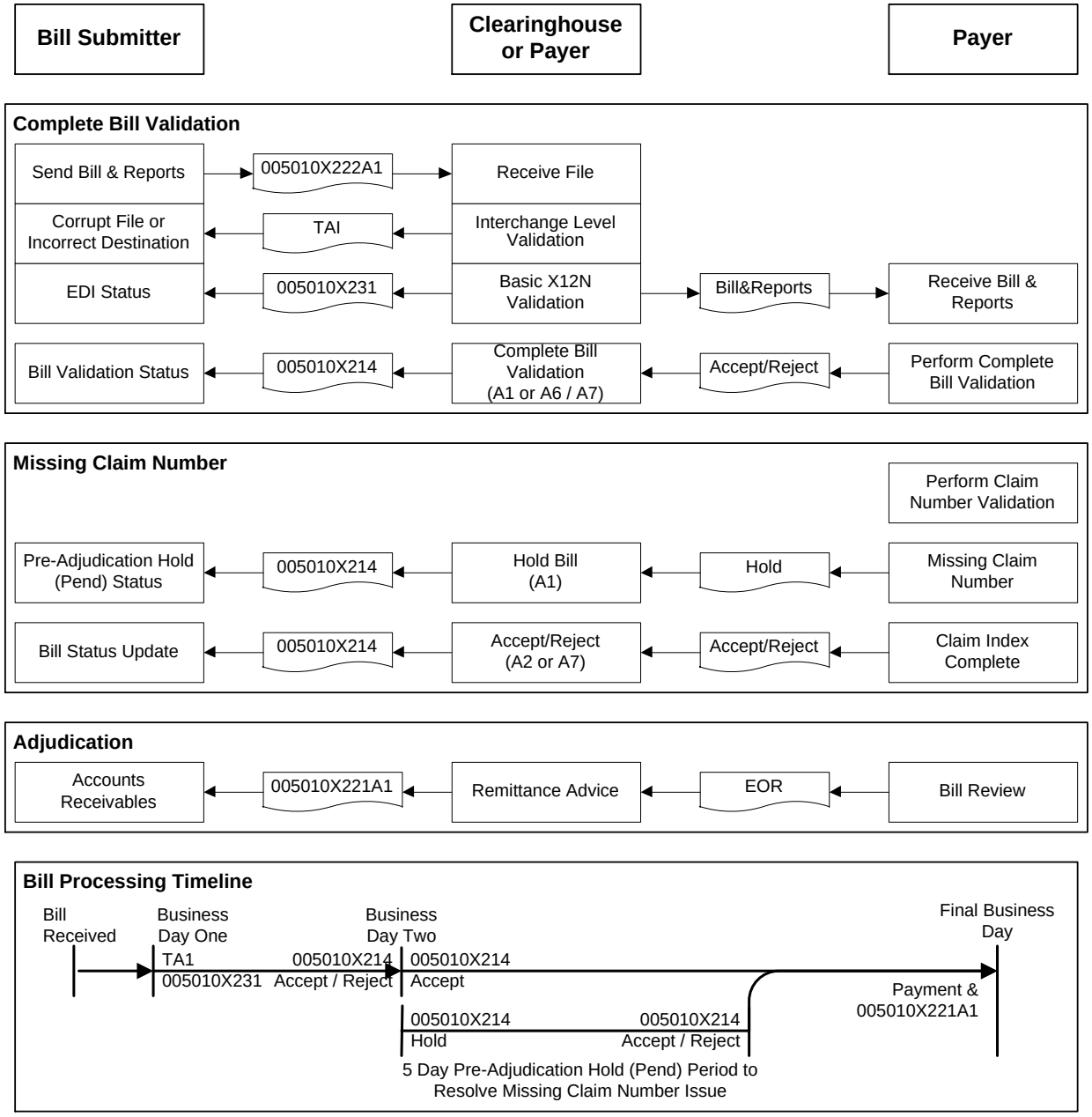

5. Missing Claim Number 005010X214 Acknowledgment Process Steps. When the 005010X222A1, 005010X223A2, or 005010X224A2 transaction has passed the clean bill validation process and loop 2010 CA REF02 indicates that the workers' compensation claim number is "unknown," the payer will need to respond with the appropriate 005010X214.

Claim Number Validation Status	005010X214
Clean Bill - Missing Claim Number	If the payer needs to pend an otherwise clean bill due to a missing claim number, it must use the following Claim Status Category Code and Claim Status Code: STC01-1 = A1 (The claim/encounter has been received. This does not mean that the claim has been accepted for adjudication.) STC01-2 = 21 (Missing or Invalid Information) AND STC10-1 = A1 (The claim/encounter has been received. This does not mean that the claim has been accepted for adjudication.) STC10-2 = 629 (Property Casualty Claim Number) Example: STC*A1:21*20090830*WQ*70******A1:629~
Claim Was Found	Once the Claim Indexing/Validation process has been completed and there is a bill/claim number match, then use the following Claim Status Category Code with the appropriate Claim Status Code: STC01-1 = A2 Acknowledgment/Acceptance into adjudication system. The claim/encounter has been accepted into the adjudication system. STC01-2 = 20 Accepted for processing Payer Claim Control Number: Use Loop 2200D REF segment "Payer Claim Control Number with qualifier 1K Identification Number to return the workers' compensation claim number and or the payer bill control number in the REF02: a. Always preface the workers' compensation claim number with the two digit qualifier "Y4" followed by the property casualty claim number. Example: Y412345678 b. If there are two numbers (payer claim control number and the workers' compensation claim number) returned in the REF02, then use a blank space to separate the numbers. - The first number will be the payer claim control number assigned by the payer (bill control number). - The second number will be the workers' compensation property and casualty claim number assigned by the payer with a "Y4" qualifier followed by the claim number. -Example: REF*1K*3456832 Y43333445556~
No Claim Found	After the Claim Indexing/ Validation process has been completed and there is no bill/ claim number match, use the following Claim Status Category Code with the appropriate Claim Status Code: STC01-1 = A6 Acknowledgment/Rejected for Missing Information. The claim/encounter is missing the information specified in the Status details and has been rejected. STC01-2 = 629 Property Casualty Claim Number (No Bill/Claim Number Match)

6. Clean Bill-Missing Report Pre-Adjudication Hold (Pending) Status. One of the processing steps that a bill goes through prior to adjudication is verification that all required documentation has been provided. The bill submitter can send the reports using the 005010X210 or other mechanisms such as fax or e-mail. In order to prevent medical bill rejections because required documentation was sent separately from the bill itself, a pre-adjudication hold (pending) period of up to five business days is mandated to enable the payer to receive and match the bill to the documentation. If the bill cannot be matched within the five business days, or if the supporting documentation is not received, the bill may be rejected as incomplete. If the payer is able to match the bill to the documentation within the five business day hold period, it continues the adjudication process. The 005010X213 is used to inform the bill submitter of the delay and the ultimate resolution of the issue.

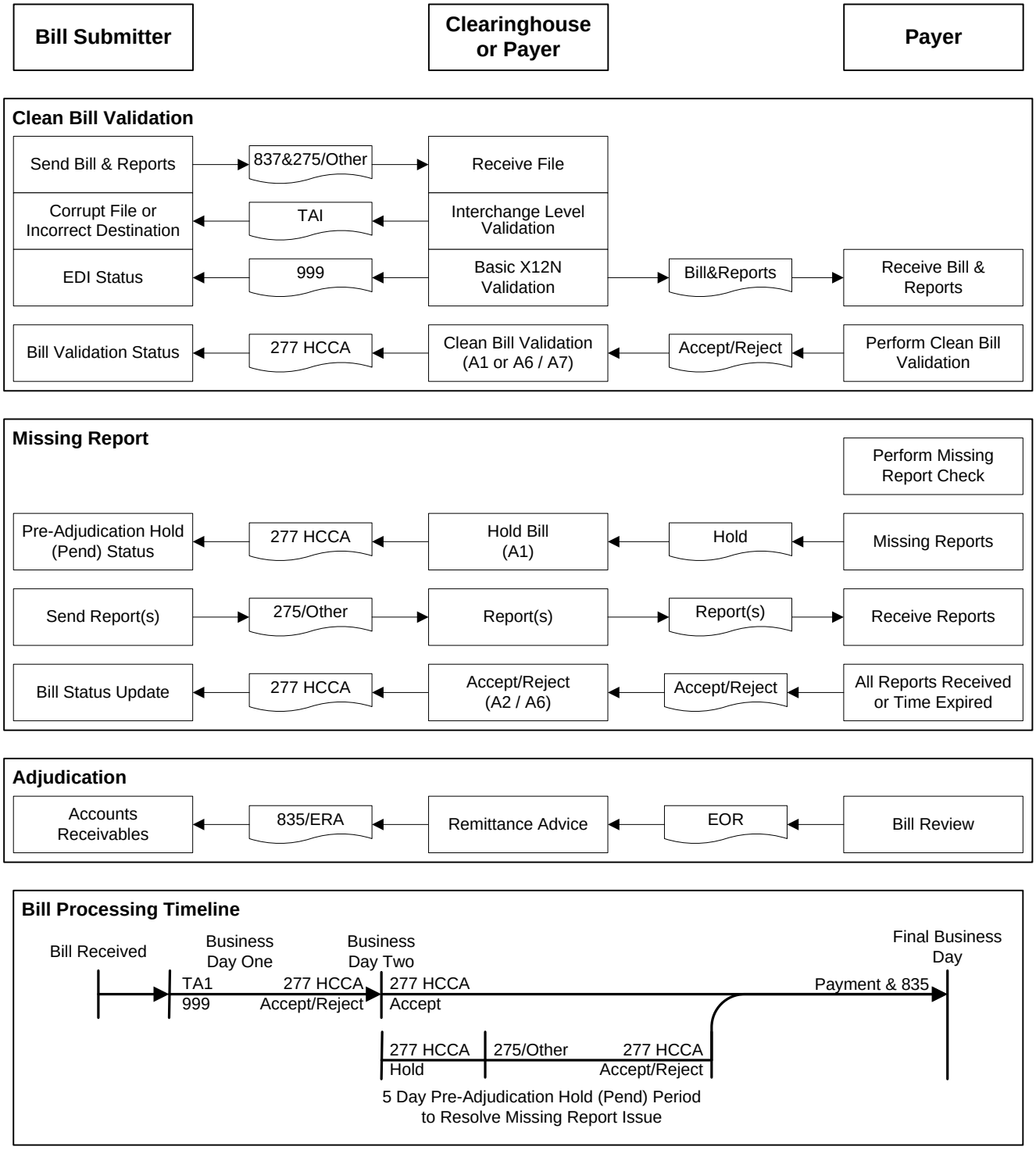
Bill Submitter
Clearinghouse or Payer
Payer
Clean Bill Validation
Send Bill & Reports
837&275/Other
Receive File
Corrupt File or Incorrect Destination
TAI
Interchange Level Validation
EDI Status
999
Basic X12N Validation
Bill&Reports
Receive Bill & Reports
Bill Validation Status
277 HCCA
Clean Bill Validation (A1 or A6 / A7)
Accept/Reject
Perform Clean Bill Validation
Missing Report
Perform Missing Report Check
Pre-Adjudication Hold (Pend) Status
277 HCCA
Hold Bill (A1)
Hold
Missing Reports
Send Report(s)
275/Other
Report(s)
Report(s)
Receive Reports
Bill Status Update
277 HCCA
Accept/Reject (A2 / A6)
Accept/Reject
All Reports Received or Time Expired
Adjudication
Accounts Receivables
835/ERA
Remittance Advice
EOR
Bill Review

Bill Processing Timeline
Bill Received
Business Day One
Business Day Two
Final Business Day
TA1
999
277 HCCA
Accept/Reject
277 HCCA
Accept
Payment & 835
277 HCCA
Hold
275/Other
277 HCCA
Accept/Reject
5 Day Pre-Adjudication Hold (Pend) Period to Resolve Missing Report Issue

7. Missing Report - 277 Health Care Claim Acknowledgment Process Steps. When a bill submitter sends an 837 that requires an attachment and loop 2300 PWK Segment indicates that a report will be following, the payer will need to respond with the appropriate 277 HCCA response(s) as applicable.

Bill Status Findings	**277 HCCA Acknowledgment Options**
Clean Bill - Missing Report	When a clean bill is missing a required report, the payer needs to place the bill in a pre-adjudication hold (pending) status during the specified waiting time period and return the following Claim Status Category Code and Claim Status Code: STC01-1 = A1 The claim/encounter has been received. This does not mean that the claim has been accepted for adjudication. STC01-2 = 21 (Missing or Invalid Information) AND STC10-1 = A1 The claim/encounter has been received. This does not mean that the claim has been accepted for adjudication. STC10-2 = Use the appropriate 277 Claim Status Code for missing report type. *Example: Claim Status Code* 294 Supporting documentation Example :STC*A1:21*20090830*WQ*70******A1:294~*:*
Report Received within the 5 day pre-adjudication hold (pending) period	Use the following Claim Status Category Code with the appropriate Claim Status Code: STC01-1= A2 Acknowledgment/Acceptance into adjudication system. The claim/encounter has been accepted into the adjudication system. STC01-2=20 Accepted for processing
No Report Received within the 5 day pre-adjudication hold (pending) period	Use the following Claim Status Category Code and Claim Status Code. STC01-1= A6 Acknowledgment/Rejected for Missing Information. The claim/encounter is missing the information specified in the Status details and has been rejected. STC01-2=294 Supporting documentation

8. Transmission Responses

a. Acknowledgments. The ASC X12 transaction sets include a variety of acknowledgments to inform the sender about the outcome of transaction processing. Acknowledgments are designed to provide information regarding whether or not a transmission can be processed, based on structural, functional, and/or application level requirements or edits. In other words, the acknowledgments inform the sender regarding whether or not the medical bill can be processed or if the transaction contains all the required data elements. Under electronic billing (LAC 40:I.Chapter 3) payers must return one of the following acknowledgments, as appropriate, according to the bill acknowledgment flow and timing diagrams found in section 9.1:

i. TA1—implementation acknowledgment;

ii. 005010X231—implementation acknowledgment (999);

iii. 005010X214—health care claim acknowledgment (277);

iii. detailed information regarding the content and use of the various acknowledgments can be found in the applicable ASC X12N type 3 technical reports (implementation guides).

b. 005010X213—Request for Additional Information. The 005010X213, or request for additional information, is used to request missing required reports from the submitter. The following are the STC01 values:

i. claim was pended; additional documentation required:

(a). STC01-1=R4 (pended/request for additional supporting documentation);

(b). STC01-2=the LOINC code indicating the required documentation;

ii. additional information regarding this transaction set may be found in the applicable ASC X12N type 3 technical reports (implementation guides).

c. 005010X221A1—Health Care Claim Payment/Advice. Within 30 calendar days of receipt of a complete electronic medical bill, the claims administrator is required to send the health care provider the 005010X221A1, if mutually agreed upon pursuant to LAC 40:I.Chapter 3, or health care claim payment/advice or other form of paper EOR. This transaction set informs the health care provider about the payment action the claims administrator has taken. Additional information regarding this transaction set may be found in Chapter 7 of this companion guide and the applicable ASC X12N type 3 technical reports implementation guides.

d. 005010X212—Health Care Claim Status Request and Response. The 005010X212 transaction set is used in the group health industry to inquire about the current status of a specified healthcare bill or bills. The 276 transaction set identifier code is used for the inquiry and the 277 transaction set identifier code is used for the reply. It is possible to use these transaction sets unchanged in workers' compensation bill processing. Additional information regarding this transaction set may be found in the applicable ASC X12N Type 3 Technical Reports Implementation Guides.

J. Appendix A—Glossary of Terms

Acknowledgment—electronic notification to original sender of an electronic transmission that the transactions within the transmission were accepted or rejected.

ADA—American Dental Association.

ADA-2006—American Dental Association (ADA) standard paper billing form.

AMA—American Medical Association.

ANSI—American National Standards Institute, a private, non-profit organization that administers and coordinates the U.S. voluntary standardization and conformity assessment system.

ASC X12 275—a standard transaction developed by ASC X12 to transmit various types of patient information.

ASC X12 835—a standard transaction developed by ASC X12 to transmit various types of health care claim payment/advice information.

ASC X12 837—a standard transaction developed by ASC X12 to transmit various types of health care claim information.

CDT—current dental terminology, coding system used to bill dental services.

Clearinghouse—a public or private entity, including a billing service, repricing company, community health management information system or community health information system, and value-added networks and switches, that is an agent of either the payer or the provider and that may perform the following functions:

a. processes or facilitates the processing of medical billing information received from a client in a nonstandard format or containing nonstandard data content into standard data elements or a standard transaction for further processing of a bill related transaction; or

b. receives a standard transaction from another entity and processes or facilitates the processing of medical billing information into a nonstandard format or nonstandard data content for a client entity. An entity that processes information received in a nonstandard format or containing nonstandard data content into a standard transaction, or that receives a standard transaction and processes that information into a nonstandard transaction.

CMS—Centers for Medicare and Medicaid Services, the federal agency that administers these programs.

CMS-1500—the paper professional billing form formerly referred to as an HCFA or HCFA—1500.

Code Sets—tables or lists of codes used for specific purposes. National standard formats may use code sets developed by the standard setting organization (i.e. X12 provider type qualifiers) or by other organizations (i.e. HCPCS codes).

Complete Bill—a complete electronic medical bill and its supporting transmissions must:

a. be submitted in the correct billing format, with the correct billing code sets;

b. be transmitted in compliance with all necessary format requirements;

c. include in legible text all medical reports and records, including, but not limited to, evaluation reports, narrative reports, assessment reports, progress report/notes, clinical notes, hospital records and diagnostic test results that are expressly required by law or can reasonably be expected by the payer or its agent under the jurisdiction's law;

d. include any other jurisdictional requirements found in its regulations or companion guide.

CPT—current procedural terminology, the coding system created and copyrighted by the American Medical Association that is used to bill professional services.

DEA—Drug Enforcement Administration.

DEA Number—prescriber DEA identifier used for pharmacy billing.

Detail Acknowledgment—electronic notification to original sender that its electronic transmission or the transactions within the transmission were accepted or rejected.

EFT—electronic funds transfer.

Electronic Bill—a bill submitted electronically from the health care provider, health care facility, or third—party biller/assignee to the payer.

Electronic Format—the specifications defining the layout of data in an electronic transmission.

Electronic Record—a group of related data elements. A record may represent a line item, a health care provider, health care facility, or third party biller/assignee, or an employer. One or more records may form a transaction.

Electronic Transmission—a collection of data stored in a defined electronic format. An electronic transmission may be a single electronic transaction or a set of transactions.

Electronic Transaction—a set of information or data stored electronically in a defined format that has a distinct and different meaning as a set. An electronic transaction is made up of one or more electronic records.

Electronic Transmission—transmission of information by facsimile, electronic mail, electronic data interchange, or any other similar method that does not include telephonic communication. For the purposes of the electronic billing rules, electronic transmission generally does not include facsimile or electronic mail.

EOB/EOR—explanation of benefits (EOB) or explanation of review (EOR) is the paper form sent by the payer to the health care provider, health care facility, or third party biller/assignee to explain payment or denial of a medical bill. The EOB/EOR might also be used to request recoupment of an overpayment or to acknowledge receipt of a refund.

Functional Acknowledgment—electronic notification to the original sender of an electronic transmission that the functional group within the transaction was accepted or rejected.

HCPCS—healthcare common procedure coding system, the HIPAA code set used to bill durable medical equipment, prosthetics, orthotics, supplies, and biologics (level II) as well as professional services (level I). Level I HCPCS codes are CPT codes

HIPAA—Health Insurance Portability and Accountability Act, federal legislation that includes provisions that mandate electronic billing in the Medicare system and establishes national standard electronic file formats and code sets.

IAIABC—International Association of Industrial Accident Boards and Commissions.

IAIABC 837—an implementation guide developed by the IAIABC based on the ASC X12 standard to transmit various types of health care medical bill and payment information from payers to jurisdictional workers' compensation agencies.

ICD-9—International Classification of Diseases, the code set administered by the World Health Organization used to identify diagnoses.

MS-1450—the paper hospital, institutional, or facility billing form, also referred to as a UB-04 or UB-92, formerly referred to as an HCFA-1450.

NABP—National Association of Boards of Pharmacy, the organization previously charged with administering pharmacy unique identification numbers. See NCPDP.

NABP Number—identification number assigned to an individual pharmacy, administered by NCPDP (other term: *NCPDP provider ID*).

NCPDP—National Council for Prescription Drug Programs, the organization administering pharmacy-unique identification numbers called NCPDP provider IDs.

NCPDP Provider ID Number—identification number assigned to an individual pharmacy, previously referred to as *NABP number*.

NCPDP Telecommunication D.0—HIPAA compliant national standard billing format for pharmacy services.

NCPDP WC/PC UCF—National Council for Prescription Drug Programs Workers' Compensation/Property and Casualty Universal Claim form, the pharmacy industry standard for pharmacy claims billing on paper forms.

NDC—National Drug Code, the code set used to identify medication dispensed by pharmacies.

Payer—the entity responsible, whether by law or contract, for the payment of the medical expenses incurred by a claimant as a result of a work related injury.

Receiver—the entity receiving/accepting an electronic transmission.

Remittance—remittance is used in the electronic environment to refer to reimbursement or denial of medical bills.

Sender—the entity submitting an electronic transmission.

Trading Partner—an entity that has entered into an agreement with another entity to exchange data electronically.

UB-04—universal billing form used for hospital billing. Replaced the UB-92 as the CMS-1450 billing form effective May 23, 2007.

UB-92—universal billing form used for hospital billing, also referred to as a CMS-1450 billing form. Discontinued use as of May 23, 2007

Version—electronic formats may be modified in subsequent releases. Version naming conventions indicate the release or version of the standard being referenced. Naming conventions are administered by the standard setting organization. Some ASC X12 versions, for example, are 3050, 4010, and 4050.

AUTHORITY NOTE: Promulgated in accordance with R.S. 23:1310.1.

HISTORICAL NOTE: Promulgated by the Louisiana Workforce Commission, Office of Workers Compensation Administration, LR 39:331 (February 2013).

Curt Eysink
Executive Director

1302#107

Notices of Intent

NOTICE OF INTENT

Department of Agriculture and Forestry
Office of Agricultural and Environmental Sciences
Seed Commission

Labeling and Testing (LAC 7:XIII.Chapter 1)

In accordance with the provisions of the Administrative Procedure Act, R.S 49:950 et seq., and with the enabling statute, R.S. 3:1433, the Seed Commission proposes to amend regulations requiring that all planting seed sold into Louisiana be completely tested by a registered seed technologist or an official state seed analyst; defining registered seed technologist; amending the general labeling requirements for certified seed; and replacing the existing seed certification standards for California bulrush, sea oats and smooth cordgrass.

Requiring that all seed sold into Louisiana be completely tested by a registered seed technologist or state seed analyst will provide reliable, dependable and accurate test data for seed purchased and planted by Louisiana's farmers and consumers, and with existing regulations, provide for seed regulatory officials authority to verify of such test data. A definition of *registered seed technologists* is needed to clarify which individuals are qualified to perform seed testing for seed offered for sale in Louisiana.

The general labeling requirements for certified seed are being amended to bring the labeling requirements into compliance with the Association of Official Seed Certifying Agencies (AOSCA), the national seed certification organization. The Louisiana Seed Certification Program works within the guidelines of AOSCA, and when AOSCA's rules are amended, Louisiana's rules must be amended to remain in compliance. The seed certification standards for California bulrush, sea oats and smooth cordgrass are being replaced with amended versions that were proposed and accepted by an ad hoc committee of agricultural professionals and industry representatives, established to review the existing standards and to propose changes that would make the regulations more suited to current industry practices.

The proposed rules set new procedures for changing rules and issuing declaratory rulings in accordance with state law, specifically R.S. 49:953(C) and R.S. 49:962.

Title 7
AGRICULTURE AND ANIMALS
Part XIII. Seeds

Chapter 1. Louisiana Seed Law

Subchapter A. Enforcement of the Louisiana Seed Law

§101. Definitions

A. The following terms are defined in addition to those in the Act.

* * *

Registered Seed Technologist—as applied in these regulations, means a seed technologist who has attained registered membership in the Society of Commercial Seed Technologists (society) through qualifying tests and experiences as required by the society.

* * *

AUTHORITY NOTE: Promulgated in accordance with R.S. 3:1431 and R.S. 3:1433.

HISTORICAL NOTE: Promulgated by the Department of Agriculture, Seed Commission, LR 4:104 (April 1978), amended by the Department of Agriculture and Forestry, Office of Agricultural and Environmental Sciences, Seed Commission, LR 12:825 (December 1986), LR 36:1220 (June 2010), LR 37:270 (January 2011), LR 39:

§121. Labeling of Seed

A. Every person whose name appears on the label of seed, except persons exempt pursuant to the authority of R.S. 3:1445, who sells, transports, distributes, or offers for sale agricultural, vegetable, or flower seeds or other propagating stock in Louisiana for planting purposes shall have a complete analysis test performed on the seed by a registered seed technologist or an official state seed analyst prior to the seed being sold, distributed or offered for sale in Louisiana.

B. Information required to be shown on the label:

1. a word or statement in type no smaller than eight points indicating that the seed has been treated;

2. the commonly accepted coined, chemical (generic) or abbreviated chemical name or a description of any process (other than application of a substance) used in such treatment in type no smaller than eight points;

3. a caution statement if the substance used in such treatment in the amount remaining with the seed is harmful to humans or other vertebrate animals;

a. seed treated with a mercurial or similarly toxic substance, if any amount remains with the seed, shall be labeled to show a statement such as "poison," "poison treated" or "treated with poison." The word "poison" shall be in type no smaller than eight points and shall be in red letters on a distinctly contrasting background. In addition, the label shall show a representation of a skull and crossbones at least twice the size of the type used for the name of the substance and the statement indicating that the seed has been treated;

b. seed treated with other harmful substances (other than mercurials or similarly toxic substances). If the amount remaining with the seed is harmful to humans or other vertebrate animals, it shall be labeled to show a caution statement, in type no smaller than eight points, such as "Do not use for food, feed or oil," except:

i. seed treated with substances other than mercurials or similarly toxic substances and in containers of four ounces or less need not be labeled to show caution statement; and

ii. the following substances shall not be deemed harmful if present at a rate less than the number of parts per million (ppm) indicated:

(a). Allethrin, 2ppm;

(b). Malathion, 8ppm;

(c). Methoxychlor, 2ppm: Piperonyl butoxide, 8ppm on oat and sorghum and 20ppm on all other seeds; and

(d). Pyrethrins, 1ppm on oat and sorghum and 3ppm on all other seeds.

C. It shall be unlawful for any person to sell or offer for sale within the state any seed labeled "foundation seed," "registered seed" or "certified seed," unless it has been produced and labeled in compliance with the rules and regulations of a seed certifying agency approved by the commissioner.

D. When more than one component is required to be named on the label, the word "mixture" or the word "mixed" shall be shown conspicuously on the label.

E. The label on hybrid corn shall show the state where grown.

F. Abbreviation of Names. The name and kind of variety of seed shall not be abbreviated, but shall be written out in full.

G. Trucks and other carriers transporting seed for delivery or sale, or to be sold or delivered to consumers in this state, on the public highways, or at public auctions shall have available for examination at any time a bill of lading, waybill or a delivery receipt showing:

1. the name of the shipper or party from whom purchased;

2. the name and address of the party to whom the seed is to be delivered;

3. the kind and amount of each separate lot of seed; and

4. the name of the truck line or owner and driver of the truck or other carrier making delivery or transporting the seed.

H. No seed shall be sold or offered for sale from any bag or container bearing a germination label more than nine months prior to the time such seed is offered for sale. For all vegetable seed packaged in hermetically sealed containers, this period shall be extended to 24 months. The owner shall be responsible for the relabeling after expiration of the germination test date period. Under the provisions of this regulation, any person, firm or corporation possessing a seedsman's permit shall have the right to label such seed after it has been retested, stating the true germination thereof. A new tag or label shall be used to bring the germination up-to-date. The original tag shall not be changed in any way.

I. After December 31, 2011 each package of coated seed shall have the following additional information on the front of the package which shall be set forth in a clear and conspicuous manner so that the ultimate purchaser is able to read the information easily and without strain:

1. the words “coated seed;”

2. a statement giving the maximum amount of coating material contained within the package;

3. a statement referring purchaser to the product label for additional information.

AUTHORITY NOTE: Promulgated in accordance with R.S. 3:1433 and 3:1436.

HISTORICAL NOTE: Promulgated by the Department of Agriculture, Seed Commission, LR 4:105 (April 1978), amended by the Department of Agriculture and Forestry, Office of Agricultural and Environmental Sciences, Seed Commission, LR 12:825 (December 1986), LR 16:492 (June 1990), LR 37:270 (January 2011), LR 37:2979 (October 2011), LR 39:

Subchapter B. General Seed Certification Requirements

§141. Processing of Certified Seed

A. - A.3.a. …

* * *

B. General Labeling Requirements

1. Each container, regardless of size, of all classes of certified seed offered for sale must bear an official certification label issued by the Louisiana Department of Agriculture and Forestry.

2. Labeling requirements may vary with the crop and methods of handling, but, in all instances, labels shall be attached to the containers in a secure manner.

3. The lot number of the label attached to each container must be the same as the lot number marked on the container.

4. The label shall contain the following information:

a. kind and variety;

b. where grown;

c. percentage of pure seed, crop seed, weed seed and inert matter;

d. name and number of noxious weed seeds per pound;

e. grower's name and address or code number;

f. germination percentage;

g. hard seed;

h. total germination and hard seed percentage;

i. net weight;

j. lot number; and

k. date of test.

5. Labels will be issued only for seed proven by laboratory analysis to meet required germination and purity standards.

6. The number of labels issued will be determined by the inspector's estimate of the quantity of seed at the time of sampling. All unused labels must be returned to the Louisiana Department of Agriculture and Forestry.

7. Prelabeling

a. In order to permit seedsmen to bag and label seed in advance of final laboratory reports, certification labels may be issued in advance. Such labels can be pre-issued upon receipt of completed field inspection reports showing that field production standards have been met. The state may grant a waiver on the movement of seed if an acceptable preliminary test is made on the seed lot. If prelabeled lots fail laboratory analysis standards, all labels shall be destroyed or returned to the Louisiana Department of Agriculture and Forestry. Failure to comply with this regulation will result in suspension of future prelabeling privileges.

8. The official certification label may be printed directly on the container with prior approval of the Louisiana Department of Agriculture and Forestry.

9. When separate seed analysis labels containing warranties, treatment information, etc., are attached to containers they shall be positioned so as not to obscure certification labels.

AUTHORITY NOTE: Promulgated in accordance with R.S. 3:1433 and R.S. 3:1434.

HISTORICAL NOTE: Promulgated by the Department of Agriculture, Seed Commission, LR 8:566 (November l982), amended LR 9:196 (April l983), amended by the Department of

Agriculture and Forestry, Office of Agricultural and Environmental Sciences, Seed Commission, LR 12:825 (December l986), LR 20:643 (June 1994), LR 31:35 (January 2005), LR 31:1510 (July 2005), LR 39:

Subchapter C. Certification of Specific Crops/Varieties

§171. California Bulrush (*Schoenoplectus californicus*) Clonally Propagated Plant Certification Standards

A. The department shall issue numbered certified bulk sales certificates when requested to do so by a grower who has met the requirements and standards set forth in this Section. The numbered certified certificates shall accompany each shipment of certified material.

B. Definition of Classes. For the purpose of this Section, the word *material* refers to clonally propagated plants with identical genotypes.

1. Breeder material shall be maintained by the plant breeder, or their respective authorized agent(s).

2. Foundation material shall be the vegetative increase of breeder material.

3. Registered material shall be the vegetative increase of either breeder or foundation material.

4. Certified material shall be the vegetative increase of breeder, foundation, or registered material.

C. DNA Fingerprinting Requirements

1. DNA fingerprinting samples shall be taken by Louisiana Department of Agriculture and Forestry (LDAF) inspectors and submitted to an LDAF approved laboratory for testing, according to the following guidelines:

a. foundation material:

i. fingerprinting is required at year of transplant and every other year thereafter;

ii. ponds—one sample/1000 sq. ft., with a minimum of 10 samples, regardless of size;

iii. containers—ten percent or 190 random plants, whichever is smaller;

b. registered material:

i. fingerprinting is required at year of transplant and every three years thereafter;

ii. ponds—one sample/1000 sq. ft., with a minimum of 10 samples, regardless of size;

iii. containers—five percent or 94 random plants, whichever is smaller;

c. certified material:

i. fingerprinting is required at year of transplant and every five years thereafter;

ii. ponds—one sample/1000 sq. ft., with a minimum of 10 samples, regardless of size;

iii. containers—five percent or 94 random plants, whichever is smaller.

2. The LDAF shall have the right to re-inspect, re-sample and re-test production fields, ponds and containers/tanks that are out-of-tolerance for DNA fingerprinting prior to final certification.

a. Resampling of fields that are out-of-tolerance for DNA fingerprinting shall be at the request of the producer.

3. Additional DNA fingerprinting samples shall be required of a certified grower when the integrity of the genetic purity of a production field, pond or container/tank has been jeopardized by any means prior to final certification.

D. Production Requirements

1. General production requirements for all classes and production methods:

a. only one variety of California bulrush shall be grown per production field, pond or container/tank;

b. all seed heads shall be routinely removed from plants after flowering begins, to ensure that viable seed are not produced;

c. production fields, ponds, container/tanks shall meet the minimum isolation distance at all points;

d. pond requirements:

i. ponds shall be contained by levees;

ii. ponds of different varieties shall be separated by the minimum required isolation distance and must have individual water supplies and water drainage capabilities for each produced variety;

e. container/tank requirements:

i. soil used for container/tank production shall:

(a). come from an area that has not produced California bulrush for a minimum of one year; and

(b). be free of visible California bulrush rhizomes and stems prior to transplanting.

2. Certified Class

a. Production fields of the certified class may be located within natural tidal influenced areas.

E. Land Requirements

1. In order to be eligible for the production of all certified classes, production fields, ponds and containers/tanks of *Schoenoplectus californicus* shall:

a. be left undisturbed for a minimum of four weeks prior to planting; and

b. be found to be free of California bulrush and noxious and objectionable weeds.

F. Grower Inspections

1. Production fields, ponds and containers/tanks shall be inspected by the grower to ensure that all requirements of this Section are met prior to each inspection by the LDAF.

G. LDAF Inspections

1. Production fields, ponds and containers/tanks shall be made accessible for inspection by the grower.

2. First Year (year of transplant)

a. Production fields, ponds and containers/tanks shall be inspected by LDAF inspectors within four weeks prior to transplanting to ensure production fields, ponds and containers/tanks are free of volunteer California bulrush plants.

b. Production fields, ponds and containers/tanks shall be non-flooded at time of inspection.

c. Production fields, ponds and containers/tanks shall be inspected between 60 and 120 days from date of establishment for the purpose of collecting DNA fingerprinting samples.

d. Production fields, ponds and containers/tanks shall be inspected by the LDAF inspectors a minimum of once a year to ensure that all requirements of this Section are being met.

e. The LDAF shall have the right to re-inspect, re-sample, and re-test production fields, ponds and containers/tanks that are out-of-tolerance for DNA fingerprinting prior to final certification.

f. Additional inspections may be performed at the discretion of the LDAF at any time without prior notice.

3. Subsequent Years

a. Production fields, ponds and containers/tanks shall be inspected by the LDAF inspectors a minimum of once a year to ensure that all requirements of this Section are being met.

b. The LDAF shall have the right to re-inspect, re-sample and re-test production fields, ponds and containers/tanks that are out-of-tolerance for DNA fingerprinting prior to final certification.

c. Additional inspections may be performed at the discretion of the LDAF at any time without prior notice.

H. Field Standards

Factor	Foundation	Registered	Certified
Maximum Age: Production Unit Life From Transplant Date[1]	4 years	6 years	Unlimited
Isolation: Minimum Clonal/Seed Separation Between Production Units			
Pond Production	Clonal - 20 ft.: Seed - 150 ft.	Clonal - 20 ft.: Seed - 150 ft.	Clonal - 20 ft.: Seed - 150 ft.
Tank Production	Clonal - 1 variety per tank: Seed - 150 ft.	Clonal - 1 variety per tank: Seed - 150 ft.	Clonal - 1 variety per tank: Seed - 150 ft.
Field Production	N/A	N/A	200 ft.
Plant Variants: Maximum Variants Allowed.			
DNA Fingerprints	1 percent	2 percent	25 percent
Visual Inspections	3 plants per 5,400 sq. ft.	5 plants per 5,400 sq. ft.	10 plants per 5,400 sq. ft.
Harmful Diseases[2]	None	None	None
Noxious or Objectionable Weeds[3]	None	None	≤ 5 plants per 5,400 sq. ft.
Land Requirements	1 year	1 year	1 year
Other Crops[4]	None	None	None

[1] No maximum age for a certified class production unit so long as the unit continues to meet all requirements of this Section

[2] Diseases seriously affecting quality of seed and transmissible by planting stock

[3] Cyperus spp. (Sedge), Eleocharis spp. (Spikerush), Phragmites australis (Roseau cane), Typha spp. (Cattail)

[4] Spartina alterniflora (Smooth cordgrass), Spartina patens (Marshhay cordgrass), Spartina cynosuroides (Big cordgrass), Spartina spartinae (Gulf cordgrass), Distichlis spicata (Saltgrass), Paspalum vaginatum (Seashore paspalum)

AUTHORITY NOTE: Promulgated in accordance with R.S. 3:1433.

HISTORICAL NOTE: Promulgated by the Department of Agriculture and Forestry, Office of Agricultural and Environmental Sciences, Seed Commission, LR 37:2980 (October 2011), LR 39:

§183. Sea Oats (*Uniola paniculata*) Clonally Propagated Plant Certification Standards

A. The department shall issue numbered certified bulk sales certificates when requested to do so by a grower who has met the requirements and standards set forth in this Section. The numbered certified certificates shall accompany each shipment of certified material.

B. Definition of Classes. For the purpose of this Section, the word *material* refers to clonally propagated plants with identical genotypes.

1. Breeder material shall be maintained by the plant breeder, or their respective authorized agent(s).

2. Foundation material shall be the vegetative increase of breeder material.

3. Registered material shall be the vegetative increase of either breeder or foundation material.

4. Certified material shall be the vegetative increase of breeder, foundation, or registered material.

C. DNA Fingerprinting Requirements

1. DNA fingerprinting samples shall be taken by (LDAF) inspectors and submitted to an LDAF approved laboratory for testing, in accordance with the following guidelines:

a. foundation material:

i. fingerprinting is required at year of transplant and every other year thereafter;

ii. plots—one sample/1000 sq. ft., with a minimum of 10 samples, regardless of size;

iii. containers—ten percent or 190 random plants, whichever is smaller;

b. registered material:

i. fingerprinting is required at year of transplant and every three years thereafter;

ii. plots—one sample/1000 sq. ft., with a minimum of 10 samples, regardless of size;

iii. containers—five percent or 94 random plants, whichever is smaller;

c. certified material:

i. fingerprinting is required at year of transplant and every five years thereafter;

ii. plots—one sample/1000 sq. ft., with a minimum of 10 samples, regardless of size;

iii. containers—five percent or 94 random plants, whichever is smaller.

2. The LDAF shall have the right to re-inspect, re-sample and re-test production plots and containers that are out-of-tolerance for DNA fingerprinting prior to final certification.

a. Resampling of production plots and container production units that are out-of-tolerance for DNA fingerprinting shall be at the request of the producer.

3. Additional DNA fingerprinting samples shall be required of a certified grower when the integrity of the genetic purity of a production plot or container production unit has been jeopardized by any means prior to final certification.

D. Production Requirements

1. General requirements for all classes and production methods:

a. only one variety of sea oats shall be grown per production plot or container production unit;

b. all seed heads shall be routinely removed from plants after flowering begins, to ensure that viable seed are not produced.

2. Plot requirements:

a. production plots shall be free of sea oats plants for a minimum of four weeks prior to transplanting;

b. production plots and container production units shall meet the minimum isolation distance at all points.

3. Container requirements:

a. soil used for container production shall:

i. come from an area that has not produced sea oats for a minimum of one year; and

ii. be free of visible sea oats rhizomes and stems prior to transplanting.

E. Land Requirements

1. To be eligible for the production of all certified classes of seed; production plots and containers of *Uniola paniculata* shall:

a. be left undisturbed for a minimum of four weeks prior to planting; and

b. found to be free of sea oats and noxious and objectionable weeds.

F. Grower Inspections

1. Production plots and containers shall be inspected by grower to ensure that all requirements of this Section are met prior to each inspection by the LDAF.

G. LDAF Inspections

1. Plots and containers shall be made accessible for inspection by the grower.

2. First Year (year of transplant)

a. Production plots and containers shall be inspected by LDAF inspectors within four weeks prior to transplanting to ensure they are free of volunteer sea oats plants.

b. Production plots and containers shall be inspected between 60 and 120 days from date of establishment for the purpose of collecting DNA fingerprinting samples.

c. Production plots and containers shall be inspected by the LDAF inspectors a minimum of once a year to ensure that all requirements of this Section are being met.

d. The LDAF shall have the right to re-inspect, re-sample, and re-test production plots and containers that are out-of-tolerance for DNA fingerprinting prior to final certification.

e. Additional inspections may be performed at the discretion of the LDAF at any time without prior notice.

3. Subsequent Years

a. Production plots and containers shall be inspected by the LDAF inspectors a minimum of once a year to ensure that all requirements of this Section are being met.

b. The LDAF shall have the right to re-inspect, re-sample and re-test production plots and containers that are out-of-tolerance for DNA fingerprinting prior to final certification.

c. Additional inspections may be performed at the discretion of the LDAF at any time without prior notice.

H. Field Standards

Factor	Foundation	Registered	Certified
Maximum Age: Production Unit Life From Transplant Date[1]	4 years	6 years	Unlimited
Isolation: Minimum Clonal/Seed Separation Between Production Units			
Plot Production	Clonal - 20 ft.: Seed - 150 ft.	Clonal - 20 ft.: Seed - 150 ft.	Clonal - 20 ft.: Seed - 150 ft.
Container Production Unit	Clonal - 1 variety per unit: Seed - 150 ft.	Clonal - 1 variety per unit: Seed - 150 ft.	Clonal - 1 variety per unit: Seed - 150 ft.
Plant Variants: Maximum Variants Allowed.			
DNA Fingerprints	1 percent	2 percent	25 percent
Visual Inspections	3 plants per 5,400 sq. ft.	5 plants per 5,400 sq. ft.	10 plants per 5,400 sq. ft.
Harmful Diseases[2]	None	None	None
Noxious or Objectionable Weeds[3]	None	None	≤ 5 plants per 5,400 sq. ft.
Land Requirements	1 year	1 year	1 year
Other Crops[4]	None	None	None

[1] No maximum age for a certified class production unit so long as the unit continues to meet all requirements of this Section

[2] Diseases seriously affecting quality of seed and transmissible by planting stock

[3] *Cyperus* spp. (Sedges), *Panicum repens* (Torpedograss), *Phragmites australis* (Roseau cane), *Fimbristylis* spp. (Fimbristylis), *Tamarix* spp. (Salt cedar), *Cenchrus* spp. (Sandbur), *Suaeda linearis* (Sea-blite), *Acacia farnesiana* (Sweet acacia)

[4] *Spartina patens* (Marshhay cordgrass), *Spartina spartinae* (Gulf cordgrass), *Sporobolus virginicus* (Dropseed), *Distichlis spicata* (Saltgrass), *Schizachyrium maritimum* (Seacoast bluestem), *Paspalum vaginatum* (Seashore paspalum), *Panicum amarum* (Beach panicgrass)

AUTHORITY NOTE: Promulgated in accordance with R.S. 3:1433.

HISTORICAL NOTE: Promulgated by the Department of Agriculture and Forestry, Office of Agricultural and Environmental Sciences, Seed Commission, LR 37:2982 (October 2011), amended LR 39:

§193. Smooth Cordgrass (*Spartina alterniflora*) Clonally Propagated Plant Certification Standards

A. The department shall issue numbered certified bulk sales certificates when requested to do so by a grower who has met the requirements and standards set forth in this Section. The numbered certified certificates shall accompany each shipment of certified material.

B. Definition of Classes. For the purpose of this Section, the word *material* refers to clonally propagated plants with identical genotypes.

1. Breeder material shall be maintained by the plant breeder, or their respective authorized agent(s).

2. Foundation material shall be the vegetative increase of breeder material.

3. Registered material shall be the vegetative increase of either breeder or foundation material.

4. Certified material shall be the vegetative increase of breeder, foundation, or registered material.

C. DNA Fingerprinting Requirements

1. DNA fingerprinting samples shall be taken by LDAF inspectors and submitted to an LDAF approved laboratory for testing, in accordance with the following guidelines:

a. foundation material:

i. fingerprinting is required at year of transplant and every other year thereafter;

ii. ponds—one sample/1000 sq. ft., with a minimum of 10 samples, regardless of size;

iii. containers—ten percent or 190 random plants, whichever is smaller;

b. registered material:

i. fingerprinting is required at year of transplant and every three years thereafter;

ii. ponds—one sample/1000 sq. ft., with a minimum of 10 samples, regardless of size;

iii. containers—five percent or 94 random plants, whichever is smaller;

c. certified material:

i. fingerprinting is required at year of transplant and every five years thereafter;

ii. ponds—one sample/1000 sq. ft., with a minimum of 10 samples, regardless of size;

iii. containers—five percent or 94 random plants, whichever is smaller.

2. The LDAF shall have the right to re-inspect, re-sample and re-test production fields, ponds and containers/tanks that are out-of-tolerance for DNA fingerprinting prior to final certification.

3. Resampling of fields that are out-of-tolerance for DNA fingerprinting shall be at the request of the producer.

4. Additional DNA fingerprinting samples shall be required of a certified grower when the integrity of the genetic purity of a production field, pond or container/tank has been jeopardized by any means prior to final certification.

D. Production Requirements

1. General production requirements for all classes and production methods:

a. only one variety of smooth cordgrass shall be grown per production field, pond or container/tank;

b. all seed heads shall be routinely removed from plants after flowering begins, to ensure that viable seed are not produced.;

c. production fields, ponds, container/tanks shall meet the minimum isolation distance at all points;

d. pond requirements:

i. ponds shall be contained by levees;

ii. ponds of different varieties shall be separated by the minimum required isolation distance, and must have individual water supplies and water drainage capabilities for each produced variety;

e. container/tank requirements:

i. soil used for container/tank production shall:

(a). come from an area that has not produced smooth cordgrass for a minimum of one year; and

(b). be free of visible smooth cordgrass rhizomes and stems prior to transplanting.

2. Certified Class

a. Production fields of the certified class may be located within natural tidal influenced areas.

E. Land Requirements. In order to be eligible for the production of all certified classes; production fields, ponds and containers/tanks of *Spartina alterniflora* shall:

1. be left undisturbed for a minimum of four weeks prior to planting; and

2. found to be free of smooth cordgrass and noxious and objectionable weeds.

F. Grower Inspections

1. Production fields, ponds and containers/tanks shall be inspected by grower to ensure that all requirements of this Section are met prior to each inspection by the LDAF.

G. LDAF Inspections

1. Production fields, ponds and containers/tanks shall be made accessible for inspection by the grower.

2. First Year (year of transplant)

a. Production fields, ponds and containers/tanks shall be inspected by LDAF inspectors within four weeks prior to transplanting to ensure production fields, ponds and containers/tanks are free of volunteer smooth cordgrass plants.

i. Production fields, ponds and containers/tanks shall be non-flooded at time of inspection.

b. Production fields, ponds and containers/tanks shall be inspected between 60 and 120 days from date of establishment for the purpose of collecting DNA fingerprinting samples.

c. Production fields, ponds and containers/tanks shall be inspected by the LDAF inspectors a minimum of once a year to ensure that all requirements of this Section are being met.

d. The LDAF shall have the right to re-inspect, re-sample, and re-test production fields, ponds and containers/tanks that are out-of-tolerance for DNA fingerprinting prior to final certification.

e. Additional inspections may be performed at the discretion of the LDAF at any time without prior notice.

3. Subsequent Years

a. Production fields, ponds and containers/tanks shall be inspected by the LDAF inspectors a minimum of once a year to ensure that all requirements of this Section are being met.

b. The LDAF shall have the right to re-inspect, re-sample and re-test production fields, ponds and containers/tanks that are out-of-tolerance for DNA fingerprinting prior to final certification.

c. Additional inspections may be performed at the discretion of the LDAF at any time without prior notice.

H. Field Standards

Factor	Foundation	Registered	Certified
Maximum Age: Production Unit Life From Transplant Date[1]	4 years	6 years	Unlimited
Isolation: Minimum Clonal/Seed Separation Between Production Units			
Pond Production	Clonal - 20 ft.: Seed - 150 ft.	Clonal - 20 ft.: Seed - 150 ft.	Clonal - 20 ft.: Seed - 150 ft.
Tank Production	Clonal - 1 variety per tank: Seed - 150 ft.	Clonal - 1 variety per tank: Seed - 150 ft.	Clonal - 1 variety per tank: Seed - 150 ft.
Field Production	N/A	N/A	200 ft.
Plant Variants: Maximum Variants Allowed.			
DNA Fingerprints	1 percent	2 percent	25 percent
Visual Inspections	3 plants per 5,400 sq. ft.	5 plants per 5,400 sq. ft.	10 plants per 5,400 sq. ft.
Harmful Diseases[2]	None	None	None
Noxious or Objectionable Weeds[3]	None	None	≤ 5 plants per 5,400 sq. ft.
Land Requirements	1 year	1 year	1 year
Other Crops[4]	None	None	None

[1] No maximum age for a certified class production unit so long as the unit continues to meet all requirements of this Section

[2] Diseases seriously affecting quality of seed and transmissible by planting stock

[3] Salvinia spp. (Salvinia), Cyperus spp. (Sedge), Eleocharis spp. (Spike rush), Phragmites australis (Roseau cane), Typha spp. (Cattail)

[4] Spartina patens (Marshhay cordgrass), Spartina cynosuroides (Big cordgrass), Spartina spartinae (Gulf cordgrass), Distichlis spicata (Saltgrass), Schoenoplectus californicus (California bulrush), Paspalum vaginatum (Seashore paspalum)

AUTHORITY NOTE: Promulgated in accordance with R.S. 3:1433.

HISTORICAL NOTE: Promulgated by the Department of Agriculture and Forestry, Office of Agricultural and Environmental Sciences, Seed Commission, LR 37:2983 (October 2011), amended LR 39:

Subchapter F. Requests for Adoption, Amendment, or Repeal of a Rule; Procedure for Declaratory Orders and Rulings

§239. Requests for Adoption, Amendment, or Repeal of a Rule

A. Any interested person may, pursuant to R.S. 49:953(C), request the commission to adopt, amend, or repeal a rule (rule change) that the commission has the authority to make.

B. A request for a rule change shall be in writing and shall contain the following information:

1. a draft of the proposed wording of the requested rule change or a statement detailing the content of the requested rule change;

2. the name, address, telephone number, fax number and e-mail address of the requesting party.

C. The request for a rule change shall be addressed to the commission and shall be mailed or delivered to 5825 Florida Boulevard, Baton Rouge, LA 70806.

D. The commission shall consider the request as follows:

1. a request for rule change shall be considered by the commission within a reasonable time, not to exceed 90 days:

a. notice of the meeting at which the request is to be considered shall be provided to the person submitting the request;

b. failure of the requesting party to attend the meeting for purposes of discussing the proposed Rule change may be cause for the request to be denied by the commission;

c. the request, with the consent of the requesting party, may be taken under consideration or action deferred pending further information. If the matter is taken under consideration or action is deferred then it will be taken up again at the next regularly scheduled meeting of the commission or at a special meeting.

E. Any decision by the commission shall be in writing and shall state the reasons for the denial or action. Such notice may be delivered by hand, mail, electronically or by any other means reasonably assured to provide notice to the requesting party.

AUTHORITY NOTE: Promulgated in accordance with R.S. 3:1433 and R.S. 49:953(C).

HISTORICAL NOTE: Promulgated by the Department of Agriculture and Forestry, Office of Agricultural and Environmental Sciences, Seed Commission, LR 39:

§241. Procedure for Declaratory Orders and Rulings

A. This rule provides for the filing and prompt disposition of requests for declaratory orders and rulings as to the applicability of any statutory provision or as to the applicability of any rule or order of the commission, as required by R.S. 49:962 and 49:963(D).

B. A request for a declaratory order or ruling shall be in writing and shall contain the following information:

1. a citation to the specific statutory provision, rule or order that will be the subject of the declaratory order or ruling;

2. a concise statement of why the declaratory order or ruling is being requested;

3. a list of all persons that the requesting party may call to testify and a list of all documents that may be submitted as evidence, if a hearing is called to take evidence;

4. the name, address, telephone number, fax number and e-mail address of the requesting party, either printed or written in legible form.

C. The request for a declaratory order or ruling shall be addressed to the commission and shall be mailed or delivered to 5825 Florida Boulevard, Baton Rouge, LA 70806.

D. The commission shall consider the request as follows.

1. The request shall be considered by the commission within a reasonable time, not to exceed 90 days.

2. Notice of the meeting at which the request is to be considered shall be provided to the person submitting the request.

E. The commission's decision shall be sent to the requesting party either by certified mail, return receipt requested; hand delivery; or commercial courier.

F. Failure of the requesting party, after notice, to attend any hearing or meeting regarding the request may be cause for the request to be denied.

AUTHORITY NOTE: Promulgated in accordance with R.S. 3:1433, R.S. 49:962 and R.S. 49:963(D).

HISTORICAL NOTE: Promulgated by the Department of Agriculture and Forestry, Office of Agricultural and Environmental Sciences, Seed Commission, LR 39:

Family Impact Statement

It is anticipated that the proposed Rule will have no significant effect on the: (1) stability of the family; (2) authority and rights of parents regarding the education and supervision of their children; (3) functioning of the family; (4) family earnings and family budget; (5) behavior and personal responsibility of children; or (6) ability of the family or a local government to perform the function as contained in the proposed Rule.

Poverty Statement

The proposed rulemaking will have no impact on poverty as described in R.S. 49:973.

Small Business Statement

It is anticipated that the proposed Rule will not have a significant adverse impact on small businesses as defined in the Regulatory Flexibility Act. The agency, consistent with health, safety, environmental and economic factors has considered and, where possible, utilized regulatory methods in drafting the proposed Rule to accomplish the objectives of applicable statutes while minimizing any anticipated adverse impact on small businesses.

Public Comments

Interested persons may submit written comments on the proposed rules to Lester Cannon, Department of Agriculture and Forestry, 5825 Florida Boulevard, Baton Rouge, LA 70806. Written comments received after 4 p.m. on Tuesday, March 20, 2013 shall not be considered. No preamble is available.

Mike Strain, DVM
Commissioner

FISCAL AND ECONOMIC IMPACT STATEMENT FOR ADMINISTRATIVE RULES
RULE TITLE: Labeling and Testing

I. ESTIMATED IMPLEMENTATION COSTS (SAVINGS) TO STATE OR LOCAL GOVERNMENT UNITS (Summary)

The proposed Rule change will have no direct impact on expenditures of state or local governmental units. The proposed Rule change revises the rules requiring that all planting seed sold into Louisiana be completely tested by a Registered Seed Technologist or an official State Seed Analyst; defining Registered Seed Technologist; amending the General Labeling Requirements for certified seed; replacing the existing seed certification standards for California Bulrush, Sea Oats and Smooth Cordgrass; and setting new procedures for Rule changes and declaratory rulings. Changes to the General Labeling Requirements for certified seed are to bring the labeling requirements into compliance with Association of Official Seed Certifying Agencies (AOSCA), the national seed certification organization. Declaratory Rule changes and declaratory rulings will be carried out using existing staff.

II. ESTIMATED EFFECT ON REVENUE COLLECTIONS OF STATE OR LOCAL GOVERNMENTAL UNITS (Summary)

There will be no effect on revenue collections of state or local governmental units as a result of the proposed Rule change.

III. ESTIMATED COSTS AND/OR ECONOMIC BENEFITS TO DIRECTLY AFFECTED PERSONS OR NONGOVERNMENTAL GROUPS (Summary)

There will be a minimal effect on the costs for individuals or companies labeling and selling seed into Louisiana. All seed sold into Louisiana is currently tested prior to being offered for sale; however, because not all seed testing laboratories are State Seed Testing Laboratories or employ a Registered Seed Technologist, it is assumed that a portion of seed being sold into Louisiana is not being tested by a Registered Seed Technologist or Official State Seed Analyst. To what extent testing is, or is not being performed by an approved analyst is indeterminable, and therefore the costs or economic benefits to individuals or businesses are indeterminable. Because all seed is currently being tested, and the average cost for testing is consistent across most seed testing laboratories, it is estimated that the costs will be minimal.

The proposed Rule change will provide a direct benefit to individuals that seek relief using the declaratory relief or rule change process. There may be a slight increase in paperwork for the individuals that choose to exercise their right to petition the Seed Commission.

IV. ESTIMATED EFFECT ON COMPETITION AND EMPLOYMENT (Summary)

The proposed Rule change is not estimated to have a direct material effect on competition or employment.

Dane Morgan	Evan Brasseaux
Assistant Commissioner	Staff Director
1302#047	Legislative Fiscal Office

NOTICE OF INTENT

Department of Agriculture and Forestry
Office of Agricultural and Environmental Sciences
Structural Pest Control Commission

Termite Control—Trench and Treat (LAC 7:XXV.141)

In accordance with provisions of the Administrative Procedure Act, R.S. 49:950 et seq., and the enabling statute, R.S. 3:3366, the Department of Agriculture and Forestry and the Structural Pest Control Commission (SPCC), proposes to amend regulations to require pest control operators in Louisiana who use termiticides approved by the SPCC, to calculate the termiticide and water mixture for a minimum of a 12 inch depth application in the trench when using the trench and treat requirements on the termiticide labels. The implementation of these Rules will clarify label requirements that have been industry standards and used in this fashion for many years, but were not specifically required on the federal labels or by the SPCC Rules. Louisiana has a significant Formosan Subterranean Termite (FST) population, which causes tremendous damage to homes each year. This Rule will assure homeowners and other structure owners that they are obtaining the best scientific protection. With this Rule change, the Department and the SPCC are continuing to protect the public by

preventing homes and other structures from infestation by subterranean termites.

Title 7
AGRICULTURE AND ANIMALS
Part XXV. Structural Pest Control
Chapter 1. Structural Pest Control Commission
§141. Minimum Specifications for Termite Control Work

A. - A.2. …

B. Requirements for Trench and Treat

1. Calculations made for the rate and volume of the termiticide mixture being applied in all trenches shall be based on a minimum of one foot of depth.

2. All trenches shall be a minimum of four inches wide at the top angled toward the foundation and a minimum of six inches deep in order to permit application of the required chemical.

3. Application of the product mixture into the trench shall be made at the rate and manner prescribed on the label and labeling.

4. Rodding shall be acceptable only when trenching will damage irrigation equipment, flowers and/or shrubs.

C. - I.2.c. …

3. The requirements specified in §141.B.1-3 shall not be waived.

J. - M.9. …

AUTHORITY NOTE: Promulgated in accordance with R.S. 3:3366.

HISTORICAL NOTE: Promulgated by the Department of Agriculture, Structural Pest Control Commission, LR 11:330 (April 1985), amended by the Department of Agriculture and Forestry, Structural Pest Control Commission, LR 15:958 (November 1989), LR 20:644 (June 1994), LR 21:931 (September 1995), LR 23:1285 (October 1997), LR 25:235 (February 1999), LR 25:1620 (September 1999), LR 26:2437 (November 2000), LR 27:1180 (August 2001), LR 29:1063 (July 2003), LR 30:1145 (June 2004), repromulgated LR 30:1614 (August 2004), amended LR 35:207 (February 2009), LR 35:1469 (August 2009), repromulgated LR 35:1872 (September 2009), amended LR 37:286 (January 2011), amended by the Department of Agriculture and Forestry, Office of Agricultural and Environmental Sciences, Structural Pest Control Commission, LR 39:

Family Impact Statement

It is anticipated that the proposed Rule will have no significant effect on the (1) stability of the family, (2) authority and rights of parents regarding the education and supervision of their children, (3) functioning of the family, (4) family earnings and family budget, (5) behavior and personal responsibility of children, or (6) ability of the family or a local government to perform the function as contained in the proposed Rule.

Poverty Impact Statement

The proposed rulemaking will have no impact on poverty as described in R.S. 49:973.

Small Business Statement

It is anticipated that the proposed Rule will not have a significant adverse impact on small businesses as defined in the Regulatory Flexibility Act. The agency, consistent with health, safety, environmental and economic factors has considered and, where possible, utilized regulatory methods in drafting the proposed rule to accomplish the objectives of applicable statutes while minimizing any anticipated adverse impact on small businesses.

Public Comments

Interested persons may submit written comments on the proposed Rules to David Fields at P.O. Box 3596, Baton Rouge, LA 70806 or 5825 Florida Blvd., Baton Rouge, LA 70806. Written comments received after 4:00 p.m. on Tuesday, March 12, 2013 shall not be considered. No preamble is available.

Public Hearing

A public hearing is scheduled for Monday, April 1, 2013 at 9 a.m. in the Veterans' Memorial Auditorium located at 5825 Florida Blvd., Baton Rouge, LA 70806.

Mike Strain, DVM
Commissioner

FISCAL AND ECONOMIC IMPACT STATEMENT FOR ADMINISTRATIVE RULES
RULE TITLE: Termite Control—Trench and Treat

I. ESTIMATED IMPLEMENTATION COSTS (SAVINGS) TO STATE OR LOCAL GOVERNMENT UNITS (Summary)

The proposed Rule change will have no direct impact on expenditures of state or local governmental units. The proposed Rule change requires pest control operators in Louisiana who use termiticides approved by the Structural Pest Control Commission (SPCC), to calculate the termiticide and water mixture for a minimum of a 12 inch depth application in the trench when using the trench and treat requirements on the termiticide labels. The implementation of this Rule change will clarify label requirements that have been industry standards and used in this fashion for many years, but were not specifically required on the federal labels or by the SPCC Rules.

II. ESTIMATED EFFECT ON REVENUE COLLECTIONS OF STATE OR LOCAL GOVERNMENTAL UNITS (Summary)

There will be no effect on revenue collections of state or local governmental units as a result of the proposed Rule change.

III. ESTIMATED COSTS AND/OR ECONOMIC BENEFITS TO DIRECTLY AFFECTED PERSONS OR NONGOVERNMENTAL GROUPS (Summary)

The proposed Rule change is not anticipated to have a direct material effect on the costs or economic benefits to directly affected persons or non-governmental groups.

IV. ESTIMATED EFFECT ON COMPETITION AND EMPLOYMENT (Summary)

The proposed Rule change is not anticipated to have a direct material effect on competition or employment.

Dane Morgan	Evan Brasseaux
Assistant	Staff Director
1302#048	Legislative Fiscal Office

NOTICE OF INTENT

Department of Culture, Recreation, and Tourism
Office of State Parks

State Parks
(LAC 25:IX.Chapters 3, 5, 9, and 11 and XI.Chapter 5)

In accordance with the provisions of the Administrative Procedures Act, R.S. 49:950 et seq., and R.S. 56:1681-1690, R.S. 56:1801-1809 and R.S. 36:201-209, the Department of Culture, Recreation and Tourism, Office of State Parks proposes to amend its regulations to perform general editing,

updating to align provisions with newly enacted statutes, a revision of fees and moving the rules governing Black Bear Golf Course from the Lieutenant Governor's Office to the Office of State Parks.

Title 25
CULTURAL RESOURCES
Part IX. Office of State Parks
Chapter 3. Rules and Regulations

§305. Vehicle Use

A. - D. …

E. No motor vehicle shall be operated on OSP property without being properly licensed by the appropriate regulatory agencies. However, persons with mobility disabilities may use single-passenger, wheeled devices powered by electric motors wherever pedestrians are allowed. Multiple-passenger wheeled devices powered by electric motors (e.g., golf carts) are permitted to transport persons with mobility disabilities within the campgrounds. The disabled visitor must be a passenger in the vehicle. Golf carts may be driven by licensed and insured drivers on the roadways at Palmetto Island State Park. Low-speed electric bicycles (electric motor of less than 750 watts, 1 h.p.) are treated like bicycles. As new wheeled devices powered by electric motors are developed, exceptions to this provision may be granted in advance on a case by case basis by the site manager or by policy approved by the assistant secretary.

F. - H. …

AUTHORITY NOTE: Promulgated in accordance with R.S. 56:1681-1690 and R.S. 36:204.

HISTORICAL NOTE: Promulgated by the Department of Culture, Recreation and Tourism, Office of State Parks, LR 8:634 (December 1982), amended LR 12:89 (February 1986), LR 14:772 (November 1988), LR 26:25 (January 2000), LR 31:1980 (August 2005), LR 39:

§307. Water Craft

A. - H. …

I. Water bodies or portions thereof adjacent to boat ramps, docks, swimming areas, boathouses, cabins, picnic pavilions, or other facilities shall be designated "no wake areas." Signs and/or buoys will mark the areas so designated. Violations of "no wake areas" shall be subject to citations.

J. Personal watercraft are prohibited at Poverty Point Reservoir, Chicot Lake, Hodges Gardens Lake and in any portion of any site posted as a "no ski zone."

AUTHORITY NOTE: Promulgated in accordance with R.S. 56:1681-1690 and R.S. 36:204.

HISTORICAL NOTE: Promulgated by the Department of Culture, Recreation and Tourism, Office of State Parks, LR 8:634 (December 1982), amended LR 12:89 (February 1986), LR 16:1052 (December 1990), LR 26:26 (January 2000), LR 31:1981 (August 2005), LR 36:1226 (June 2010), LR 39:

§313. Fishing, Hunting, Trapping, and the Use of

A. All wildlife in OSP sites, including reptiles and amphibians, is under strict protection and must not be hunted, molested, disturbed, destroyed, fed or removed, except for scientific or management purposes when approved by the assistant secretary.

B. …

C. A person who lawfully possesses a firearm may possess or transport such firearm within the boundaries of a state park, state historic site or state preservation area.

D. …

E. A person fishing on OSP property must adhere to all state and federal laws and criteria regarding fresh and/or salt water fishing. The taking of fish by nets, traps or any means other than hook or line is prohibited at any and all sites, except for management purposes as authorized by special permit. Notwithstanding the previous provision to the contrary, the taking of flounder by gigs, crabbing at Grand Isle SP and the taking of fish by means of a yo-yo or trigger device (as defined in R.S. 56:8) in Chicot Lake at Chicot State Park, are permitted subject to the following restrictions:

1. fishing with the use of yo-yos or trigger devices shall be permitted on Chicot Lake only from November 1-March 1 of each year;

2. not more than 24 yo-yos or trigger devices shall be allowed per boat;

3. each yo-yo must be tagged with the name of the responsible party, the registration number of the boat, and the date and time the yo-yo was set;

4. all yo-yos must be attended and re-tagged at least every 48 hours.

F. Weapon-like toys (paintball maker, airsoft, etc.) that use compressed air or gases from any cartridge, canister or bottle and/or battery power to fire a projectile are prohibited from use at all OSP sites properties without prior written approval of the assistant secretary or his designee.

AUTHORITY NOTE: Promulgated in accordance with R.S. 56:1681-1690 and R.S. 36:204.

HISTORICAL NOTE: Promulgated by the Department of Culture, Recreation and Tourism, Office of State Parks, LR 8:633 (December 1982), amended LR 12:89 (February 1986), LR 14:773 (November 1988), LR 16:1052 (December 1990), LR 19:308 (March 1993), LR 31:1982 (August 2005), LR 36:1227 (June 2010), LR 39:

§314. Swimming

A. …

B. All children under 12 years of age must be accompanied by an adult at any swimming area or water playgrounds.

C. The capacity of all pools, water playgrounds and beach areas is determined, regulated and enforced by the site manager.

D. - G.. …

H. Proper swimming attire, as determined by the site manager or his designee, is required for those entering the water at all swimming areas and water playgrounds.

AUTHORITY NOTE: Promulgated in accordance with R.S. 56:1681-1690 and R.S. 36:204.

HISTORICAL NOTE: Promulgated by the Department of Culture, Recreation and Tourism, Office of State Parks, LR 8:635 (December 1982), amended LR 12:89 (February 1986), LR 16:1052 (December 1990), LR 26:27 (January 2000), amended LR 31:1983 (August 2005), LR 36:1227 (June 2010), LR 39:

§315. Amplified Sound Equipment

A. No person shall play amplified musical instruments except when approved by the assistant secretary or his designee.

B. No person shall play non-amplified musical instruments, radios, televisions, tape players and similar equipment in a manner that disturbs other visitors.

C. No person shall use any public address systems, whether fixed, portable, or vehicle mounted, without prior approval of the assistant secretary or his designee.

D. Remote public broadcast activities must be approved by the assistant secretary or his designee.

AUTHORITY NOTE: Promulgated in accordance with R.S. 56:1681-1690 and R.S. 36:204.

HISTORICAL NOTE: Promulgated by the Department of Culture, Recreation and Tourism, Office of State Parks, LR 8:636 (December 1982), amended LR 12:89 (February 1986), LR 26:27 (January 2000), LR 31:1983 (August 2005), LR 39:

§317. Disorderly Conduct

A. - B. …

C. No person shall publicly display on his vehicle, campsite, clothing, person or otherwise any word or words, image, graphic or depiction that is obscene; denigrates any ethnic, racial, religious or minority group; or promotes violence or illegal activity.

Obscene—obscenity as contained in R.S. 14:106.

AUTHORITY NOTE: Promulgated in accordance with R.S. 56:1681-1690 and R.S. 36:204.

HISTORICAL NOTE: Promulgated by the Department of Culture, Recreation and Tourism, Office of State Parks, LR 8:636 (December 1982), amended LR 12:89 (February 1986), LR 26:27 (January 2000), LR 31:1983 (August 2005), LR 39:

§319. Business Activities

A. No person may sell or offer for sale any merchandise or service without the written consent of the assistant secretary or his designee.

B. No person may distribute, post, place, or erect any advertising device without the written consent of the assistant secretary or his designee.

AUTHORITY NOTE: Promulgated in accordance with R.S. 56:1681-1690 and R.S. 36:204.

HISTORICAL NOTE: Promulgated by the Department of Culture, Recreation and Tourism, Office of State Parks, LR 8:636 (December 1982), amended LR 12:89 (February 1986), LR 26:27 (January 2000), LR 31:1983 (August 2005), LR 39:

§321. Fines and Enforcement of the Rules and Regulations

A. In addition to any other penalty provided by law, persons violating these rules and regulations are subject to: administrative fines for each violation of not less than $15 nor more than $250 (R.S. 56:1689), eviction from the site, and/or restitution to the state for damages incurred. If a person is delinquent in paying for damage incurred, the agency reserves the right to refuse privileges to that person pending receipt of such restitution.

B. - D. …

AUTHORITY NOTE: Promulgated in accordance with R.S. 56:1681-1690 and R.S. 36:204.

HISTORICAL NOTE: Promulgated by the Department of Culture, Recreation and Tourism, Office of State Parks, LR 8:636 December 1982), amended LR 12:89 (February 1986), LR 26:27 (January 2000), LR 27:1673 (October 2001), LR 31:1983 (August 2005), LR 36 1227 (June 2010), LR 39:

§331. Overnight Use

A. - C.3. …

4. The maximum overnight (10 p.m. to 8 a.m.) capacity for cabins, lodges and group camps is the maximum sleeping capacity of the facilities. The maximum daytime (8 a.m. to 10 p.m.) capacity for cabins, lodges and group camps is double the sleeping capacity of the facilities. Exceptions may be granted by the assistant secretary or his designee.

AUTHORITY NOTE: Promulgated in accordance with R.S. 56:1681-1690 and R.S. 36:204.

HISTORICAL NOTE: Promulgated by the Department of Culture, Recreation and Tourism, Office of State Parks, LR 8:634 (December 1982), amended LR 12:89 (February 1986), LR 14:772 (November 1988), LR 16:1053 (December 1990), LR 19:308 (March 1993), LR 26:28 (January 2000), LR 27:1673 (October 2001), LR 31:1984 (August 2005), LR 36:1227 (June 2010), LR 39:

Chapter 5. Procedures and Fees

§500. Fees and Exemptions; Day-Use Fees

A. State Parks General Admission Day-Use Entrance Fees

1. Except as otherwise provided in this Chapter, a day-use fee is charged at all state parks (except St. Bernard State Park).

a. Persons in noncommercial vehicles, walk-in visitors and visitors on bicycles are charged $2 per person per day.

1.b. - 2.b. …

3. A self-service fee system may be used to collect user fees on areas not normally served by an entrance control station.

4. Dump Station Use. Persons with recreational vehicles who desire to utilize only the pump station facilities on any state park shall be charged the day use entrance fee. Discounts are not applicable to this use.

B. State Historic Sites General Admission Fees

1. Except as otherwise provided in this Section, an admission fee of $4 per person is charged for all state historic sites.

a. Locust Grove SHS and Los Adaes SHS have no admission fee.

b. - c. …

d. Rosedown Plantation SHS and Audubon SHS admission fees are set forth in this Section.

2. - 3.b.iv. …

4. Audubon State Historic Site

a. Charges for admission to the visitor center, plantation house and grounds at the following rates:

i. $8 per adult (ages 18 to 61);

ii. $6 per senior citizen (ages 62 and over);

iii. $4 per student (ages 6 to 17);

iv. free for children (ages 5 and under).

b. Charges for admission to the grounds only at the following rates:

i. $4 per person (6 and over);

ii. free for children (ages 5 and under).

5. Organized groups of 10 or more are requested to notify the site manager in advance of their arrival. There is no additional fee for SHS visitors arriving by bus.

C. …

AUTHORITY NOTE: Promulgated in accordance with R.S. 56:1681-1690 and R.S. 36:204.

HISTORICAL NOTE: Promulgated by the Department of Culture, Recreation and Tourism, Office of State Parks, LR 8:636 (December 1982), amended LR 12:89 (February 1986), LR 14:774 (November 1988), LR 16:1053 (December 1990), LR 19:309 (March 1993), LR 26:29 (January 2000), LR 27:1673 (October 2001), amended LR 31:1986 (August 2005), LR 36:1228 (June 2010), LR 39:

§501. Fees and Exemptions; Miscellaneous Services and Facilities Fees

A. Boating

1. - 2. …

3. Canoes may be rented for $5 per hour or $20 per vessel, per day. Kayaks and paddle boats may be rented for $5 per hour or $30 per vessel, per day. A guided canoe float

trip is charged $25 per canoe, per trip. All fees include paddles and life jackets.

4. At some sites rental boats, kayaks, canoes and other water vessels may be available through a concessionaire. Visitors should contact the site to check availability and rates.

B. - C. …

D. Group Rental Pavilions

1. Group rental pavilions are available at most state parks and state historic sites.

2. - 5. …

6.a. Type I Pavilion. These pavilions, usually located in the day-use area, accommodate a standard of 40 people. Reserved rental rate is $40 per day.

b. Type II Pavilion. These pavilions, usually located in the day-use area, accommodate 60 people. Reserved rental rate is $60 per day.

c. Type III Pavilion. These pavilions are usually separated from the day-use area, affording more group privacy than the other pavilion types. They may accommodate 100 people. Reserved rental rate is $100 per day.

E. Meeting Rooms. Meeting rooms used to accommodate meetings and functions of private groups, clubs and other organizations are available during normal park operating hours. Kitchen facilities may be used, if available. Meeting room rates are as follows.

$100	Type I e.g., North Toledo Bend, Palmetto Island, Lake D'Arbonne, Arboretum, Fontainebleau, Poverty Point Reservoir, Lake Claiborne, Palmetto Island
$150	Type II e.g., Chemin-à-Haut, Chicot
$200	Type III e.g., Lake Fausse Pointe, Bogue Chitto

AUTHORITY NOTE: Promulgated in accordance with R.S. 56:1681-1690 and R.S. 36:204.

HISTORICAL NOTE: Promulgated by the Department of Culture, Recreation and Tourism, Office of State Parks, LR 8:637 (December 1982), amended LR 12:89 (February 1986), LR 14:774 (November 1988), LR 16:1052 (December 1990), LR 26:29 (January 2000), LR 27:1673 (October 2001), LR 31:1986 (August 2005), LR 36:1228 (June 2010), LR 39:

§502. Fees and Exemptions; Exemptions/Discounts

A. Disabled Veterans. A special veteran entrance permit allows any disabled louisiana resident who is a veteran of the armed forces of the United States and any person(s) accompanying him in a single, private, non-commercial vehicle exemption from the day use entrance fees to any Louisiana state park. Applications for a veteran permit may be made to the Louisiana Department of Veterans' Affairs Service Office serving the parish in which the applicant resides. After certification of eligibility has been established by the Department of Veterans' Affairs, the assistant secretary of the Office of State Parks will issue a permit directly to the applicant.

B. …

C. National Parks and Federal Recreation Lands Passes. Any citizen of the United States who possesses a national parks and federal recreation lands senior pass (formerly the golden age passport) or access pass (formerly the golden access passport) issued by any agency of the United States, pursuant to 16 U.S.C. Section 460 L-65, upon presentation of the pass and proper identification to any OSP authorities, shall be exempt from the day-use entrance fee to any OSP site and/or receive a 50 percent discount on camp site rental fees provided that the state park system of the citizen's domicile as reflected on his presented identification also recognizes such passes for discounted access and services.

D. Non Profit Community Home-Based Organization. Any child age 18 or under who is retained in the legal custody of the state through a bona fide contractual service agreement with a public, non-profit community home-based organization or provider shall be exempt from paying the general day-use entrance fees or any other day-use fee at any site. Such use must be in conjunction with an organized group outing or event sponsored and supervised by the public, non-profit organization or provider.

1. …

2. This exemption shall not be applicable to overnight facilities at any state park such as group camps, cabins, campgrounds, etc.

E. Annual Day Use Permits

1. Permits are available at a cost of $80 per year. This permit, in the form of a wallet I.D. card, allows the holder individually or as a passenger in a single, private non-commercial vehicle entry to all sites in lieu of the normal day-use fee. All people accompanying a permit holder as occupants in a single, private non-commercial vehicle in which the permit holder is a passenger or driver are also admitted without charge.

a. …

b. The annual day-use permits are valid for a period of one year from the date of purchase. Permits may be obtained at any site.

E.2. - F. …

AUTHORITY NOTE: Promulgated in accordance with R.S. 56:1681-1690 and R.S. 36:204.

HISTORICAL NOTE: Promulgated by the Department of Culture, Recreation and Tourism, Office of State Parks, LR 8:637 (December 1982), amended LR 12:89 (February 1986), LR 14:774 (November 1988), LR 16:1053 (December 1990), LR 19:309 (March 1993), LR 26:29 (January 2000), LR 27:1673 (October 2001), LR 31:1987 (August 2005), LR 36:1229 (June 2010), LR 39:

§504. Fees and Exemptions; Overnight Use

A. Camping

1. An improved campsite rents for $18 per night during the winter season (October 1-March 31) and $22 per night during the summer season (April 1-September 30). An unimproved campsite rents for $14 per night. A premium campsite rents for $20 per night during the winter season and $28 per night during the summer season. For information regarding campsite reservation fees, see reservation policy, §505.

A.2. - F.1. …

G. Special Research Dormitory Facilities at Poverty Point SHS

1. - 8. …

AUTHORITY NOTE: Promulgated in accordance with R.S. 56:1681-1690 and R.S. 36:204.

HISTORICAL NOTE: Promulgated by the Department of Culture, Recreation and Tourism, Office of State Parks, LR 8:638 (December 1982), amended LR 12:89 (February 1986), LR 12:828 (December 1986), LR 26:30 (January 2000), LR 27:1674 (October 2001), LR 31:1988 (August 2005), LR 36:1229 (June 2010), LR 39:

§505. Reservation Policy

A. General Provisions

1. Reservations may be made for all OSP facilities that are subject to reservation, by calling (877) 226-7652. Overnight and day-use facilities, including cabins, lodges, group camps, camping sites, rally shelters, meeting rooms and pavilions may be reserved 11 months in advance. For example, if a park user wants to use a facility on July 2, he may make the reservation no earlier than August 2, or the first business day after August 2, of the prior year. Reservations may also be made on line 24 hours a day by accessing the OSP web site: www.lastateparks.com. A non-refundable service fee is charged for all reservations.

2. The call center will operate 7 a.m. to 6 p.m., Monday-Friday. The call center will close for state holidays. Based upon demand, the center's hours may be extended by the assistant secretary or his designee.

3. - 8. …

AUTHORITY NOTE: Promulgated in accordance with R.S. 56:1681-1693 and R.S. 36:204.

HISTORICAL NOTE: Promulgated by the Department of Culture, Recreation and Tourism, Office of State Parks, LR 8:640 (December 1982), amended LR 12:89 (February 1986), LR 14:777 (November 1988), LR 16:1051 (December 1990), LR 26:32 (January 2000), LR 27:1674 (October 2001), LR 31:1989 (August 2005), LR 36:1230 (June 2010), LR 39:

Chapter 9. Division of Outdoor Recreation Administration

§901. Land and Water Conservation Fund Program Summarized[1]

A. - B. …

C. Designation of State Liaison Officer. To be eligible for assistance under the LandWCF Act, each state must designate a state liaison officer (SLO) who shall represent the state in dealing with the director of the NPS for purposes of the LandWCF program. The SLO shall have the authority and responsibility to accept and to administer funds paid for approved projects. The SLO is designated as the Department of Culture, Recreation and Tourism assistant secretary for the Office of State Parks. An alternate state liaison officer (ASLO) shall support actions of the SLO as appropriate when necessary in accordance to all provisions of the LandWCF Act. The ASLO is designated as the Office of State Parks director of outdoor recreation.

D. …

[1]Department of the Interior, LandWCF Grants Manual, 69, effective October 1, 2008.

AUTHORITY NOTE: Promulgated in accordance with R.S. 56:1681-1690 and R.S. 36:204.

HISTORICAL NOTE: Promulgated by the Department of Culture, Recreation and Tourism, Office of State Parks, LR 12:89 (February 1986), amended LR 12:829 (December 1986), repromulgated LR 31:1991 (August 2005), LR 36:1231 (June 2010), LR 39:

§921. LandWCF Application Preparation, Review and Selection Process

A. Applications for LandWCF funds must be submitted to the DOR through an online application available on the Louisiana State Parks web site. Applications must be submitted by April 1 (annually). Receipt of an application initiates an extensive and highly competitive process involving DOR preparation of the federal application package, securing clearinghouse approval, evaluation and rating, and presentation to the Louisiana State Parks and Recreation Commission (SPARC) for review and recommendations to the SLO of those projects to be forwarded to the National Park Service for federal approval. Assistance is available from the DOR staff for completion of the online application at any time throughout the year.

1. - 2. …

3. Development projects must be a single scope of work. Initial applications for projects that require additional phases should indicate the master plan for the entire development. Supporting documents submitted for the first of a series of phases should indicate the entire master development plan for the facility. To receive funding assistance for subsequent phases of development, the active project must be completed and a new application submitted identifying the elements that will be addressed in the current phase. Supporting documents form the original application can be used to minimize duplication. Approval of the initial project does not imply guarantee of assistance in subsequent phases.

4. Subsequent phases to achieve elements of a master plan in an existing LandWCF project are prioritized in accordance with the open project selection process. This objective scoring system prioritizes all applications in accordance with LandWCF regulations, which are then funded to the full extent of available federal funds. The prioritization is validated by the SPARC prior to submission to the National Park Service for federal review and approval.

5. - 8. …

AUTHORITY NOTE: Promulgated in accordance with R.S. 56:1681-1704, R.S. 56:1801-1809 and R.S. 36:201-209.

HISTORICAL NOTE: Promulgated by the Department of Culture, Recreation and Tourism, Office of State Parks, LR 36:1232 (June 2010), amended LR 39:

§929. RTP Application Preparation, Review and Selection Process

A. - C. …

D. Within one business day of the application deadline, Division of Outdoor Recreation staff will begin an initial review of all applications for completeness. Applications lacking all necessary documentation will be considered ineligible and will be returned to the project sponsor. Applications providing satisfactory documentation will be evaluated in accordance with Federal Highway Administration standards and ranked in priority order. The Louisiana Recreational Trails Advisory Committee will endorse projects gaining initial approval, ranking results. This committee will advise the Division of Outdoor Recreation staff on project priority. Applications will be forwarded for environmental clearance by the Department of Transportation and Development. With environmental clearance, projects will be forwarded to the Federal highway Administration for federal approval.

E. - F. …

AUTHORITY NOTE: Promulgated in accordance with R.S. 56:1681-1704, R.S. 56:1801-1809 and R.S. 36:201-209.

HISTORICAL Note: Promulgated by the Department of Culture, Recreation and Tourism, Office of State Parks, LR 36:1234 (June 2010), amended 39:

Chapter 11. Black Bear Golf Course

Editor' Note: This Chapter, (§§1101-1131) has been moved from LAC 25:XI.Chapter 5, (§§501-531).

§1101. Definitions
[Formerly LAC 25:XI.501]

A. As used within this Part, the following terms have the meanings provided herein.

Black Bear Golf Course (course)—a public, 18-hole championship golf course and its associated property and facilities. Located adjacent to Poverty Point Reservoir in Richland Parish, Louisiana, the *course* is operated by the Louisiana Department of Culture, Recreation and Tourism, Office of State Parks.

Director of Golf (director)—the top supervisor directly in charge of day-to-day management of the course. The *director* is responsible for enforcing all rules set forth in this Part and for enforcing all course policies and procedures.

AUTHORITY NOTE: Promulgated in accordance with R.S. 36:204.

HISTORICAL NOTE: Promulgated by the Department of Culture, Recreation, and Tourism, Office of the Secretary, LR 33:249 (February 2007), amended by the Department of Culture, Recreation, and Tourism, Office of State Parks, LR 39:

§1103. General Authority and Purpose
[Formerly LAC 25:XI.503]

A. Course rules are designed to provide the proper atmosphere for the enjoyment and protection of course facilities and for the safety of visitors. Visitors are expected to familiarize themselves with these rules.

B. Course is open to all persons regardless of race, color, national origin, age, sexual orientation, or disability.

C. All applicable rules governing the Office of State Parks shall apply to Black Bear Golf Course.

AUTHORITY NOTE: Promulgated in accordance with R.S. 36:204.

HISTORICAL NOTE: Promulgated by the Department of Culture, Recreation, and Tourism, Office of the Secretary, LR 33:250 (February 2007), amended by the Department of Culture, Recreation, and Tourism, Office of State Parks, LR 39:

§1105. Course Property
[Formerly LAC 25:XI.505]

A. No person shall intentionally remove, damage, destroy, or disturb course property or the property of another course visitor, without the consent of the owner. Such "property" shall include but is not limited to structures, signs, movables, markers, natural features, holes, grass or other plants or landscaping, or wildlife.

B. Smoking is prohibited except in designated areas. No outside alcoholic beverages are allowed on course property.

C. No person shall throw, drop, deposit, discard, permit the intentional or accidental ejection, emission, or escape of, or otherwise dispose of litter upon course property.

AUTHORITY NOTE: Promulgated in accordance with R.S. 36:204.

HISTORICAL NOTE: Promulgated by the Department of Culture, Recreation, and Tourism, Office of the Secretary, LR 33:250 (February 2007), amended by the Department of Culture, Recreation, and Tourism, Office of State Parks, LR 39:

§1107. Golfing Etiquette
[Formerly LAC 25:XI.507]

A. All golfers must use proper golfing etiquette at all times. This includes but is not limited to maintaining the proper pace of play and allowing incoming groups to play through if necessary. Golfers should repair divots in the fairway and ball marks on greens.

B. Proper attire, including shirt and shoes, must be worn by all golfers at all times. Proper attire for men includes sleeved and collared or semi-collared shirts; hemmed non-denim pants or shorts April 1-October 31 (denim acceptable November 1-March 31 at the discretion of the pro shop staff); and soft-spike shoes. Proper attire for women includes collared or semi-collared shirts; hemmed non-denim pants, shorts, or skirts; and soft-spike shoes.

C. Groups of more than five golfers will only be allowed to play in a group together on the course with special permission from the director. Single golfers will only be allowed if the course is clear or with special permission from the director.

D. Children under 6 years old are not allowed on the course without special permission from the director. When on a golf cart, children between and including age 6 to age 16 must be accompanied by an adult.

AUTHORITY NOTE: Promulgated in accordance with R.S. 36:204.

HISTORICAL NOTE: Promulgated by the Department of Culture, Recreation, and Tourism, Office of the Secretary, LR 33:250 (February 2007), amended by the Department of Culture, Recreation, and Tourism, Office of State Parks, LR 39:

§1109. Disorderly Conduct
[Formerly LAC 25:XI.509]

A. Disorderly or boisterous conduct is forbidden.

B. The director is authorized to control the use and consumption of alcoholic beverages on the course. The consumption of alcoholic beverages may be allowed to the extent that such activity does not adversely affect the use and enjoyment of the course by others.

C. No loud or otherwise disruptive pets will be allowed at the course. The director or other authorized course employees will have discretion to determine which pets are not allowed. Owners will be responsible for their pets, including keeping the pets under control, cleaning up after the pets, and the payment of restitution for any damage caused by the pets.

AUTHORITY NOTE: Promulgated in accordance with R.S. 36:204.

HISTORICAL NOTE: Promulgated by the Department of Culture, Recreation, and Tourism, Office of the Secretary, LR 33:250 (February 2007), amended by the Department of Culture, Recreation, and Tourism, Office of State Parks, LR 39:

§1111. Business Solicitation
[Formerly LAC 25:XI.511]

A. No person may sell or offer for sale any merchandise or service at the course without the written consent of the director, subject to applicable laws, rules, and policies of the state.

B. No person may distribute, post, place, or erect any advertising device at the course without the written consent of the director, subject to applicable laws, rules, and policies of the state.

AUTHORITY NOTE: Promulgated in accordance with R.S. 36:204.

HISTORICAL NOTE: Promulgated by the Department of Culture, Recreation, and Tourism, Office of the Secretary, LR 33:250 (February 2007), amended by the Department of Culture, Recreation, and Tourism, Office of State Parks, LR 39:

§1113. Trespass
[Formerly LAC 25:XI.513]

A. No person shall enter course property except at designated public access points or unless possessing permission from authorized agents of the course.

B. No person shall enter the course when the course is closed.

AUTHORITY NOTE: Promulgated in accordance with R.S. 36:204.

HISTORICAL NOTE: Promulgated by the Department of Culture, Recreation, and Tourism, Office of the Secretary, LR 33:250 (February 2007), amended by the Department of Culture, Recreation, and Tourism, Office of State Parks, LR 39:

§1115. Vehicle Use
[Formerly LAC 25:XI.515]

A. The provisions of the Louisiana Highway Regulatory Act (R.S. 32:1 et seq.) and any rules and regulations promulgated thereunder shall be enforced on course property.

B. Automobiles, trucks, motorcycles, bicycles, recreation vehicles, or any other wheeled vehicles, excluding golf carts, must be operated only on those roads, lanes, or byways designated for vehicular traffic unless otherwise specifically authorized by the director.

C. Golf carts must be driven only on the cart paths at tees and greens. Golf carts may not be driven in the heavy rough areas.

D. Vehicles, including recreational vehicles, motorcycles, and trailers, shall be parked only in designated parking areas unless otherwise specifically authorized by the director or his designees.

E. No person shall operate a vehicle in excess of the posted speed limit.

F. No unauthorized person may remove any barrier to gain access to a restricted area.

AUTHORITY NOTE: Promulgated in accordance with R.S. 36:204.

HISTORICAL NOTE: Promulgated by the Department of Culture, Recreation, and Tourism, Office of the Secretary, LR 33:251 (February 2007), amended by the Department of Culture, Recreation, and Tourism, Office of State Parks, LR 39:

§1117. Fines and Enforcement of the Rules and Regulations
[Formerly LAC 25:XI.517]

A. In addition to any other penalty provided by law, persons violating these rules and regulations are subject to administrative fines for each violation, eviction from the course, and/or restitution to the DCRT for damages incurred.

B. At the director's discretion, any person who is evicted from the course for disciplinary reasons may be banned from the course for one year.

C. If a person is delinquent in paying for damage incurred, the DCRT reserves the right to refuse privileges to that person pending receipt of such restitution.

AUTHORITY NOTE: Promulgated in accordance with R.S. 36:204.

HISTORICAL NOTE: Promulgated by the Department of Culture, Recreation, and Tourism, Office of the Secretary, LR 33:251 (February 2007), amended by the Department of Culture, Recreation, and Tourism, Office of State Parks, LR 39:

§1119. Operating Schedule
[Formerly LAC 25:XI.519]

A. The course operating schedule will be set at the discretion of the director based on user demand, course conditions, budgetary reductions, legislative mandates, construction and maintenance, availability of staff and other resources, and other relevant factors. The hours of operation will be posted at the course.

B. The director may direct the closing of the course to public use when or if any natural or man-made occurrence has affected, or is expected to affect, the operation and management of the course to a degree normal public use and enjoyment are altered, or when such use might impair the health, safety, and well-being of the public or the course employees.

C. The director may also close portions of the course for reasons provided in Subsections A or B or for any other relevant factor.

AUTHORITY NOTE: Promulgated in accordance with R.S. 36:204.

HISTORICAL NOTE: Promulgated by the Department of Culture, Recreation, and Tourism, Office of the Secretary, LR 33:251 (February 2007), amended by the Department of Culture, Recreation, and Tourism, Office of State Parks, LR 39:

§1121. Course Fees
[Formerly LAC 25:XI.521]

A. Fees

The maximum fees that may be charged for reservations or use of the course and its services and facilities are as follows, taxes not included:	*Maximum Fee*
Greens fee per g olfer, including shared cart and range balls	$75
Second tee time	$40/per golfer
Annual pass	$2800
Driving range	$15/hour
Cart rental, 18 holes	$18/rider
Cart rental, 9 holes	$10/rider

B. From time to time, as deemed appropriate by the assistant secretary or his designee, special programs, rates, discounts on course fees, or package deals may be offered in order to promote the course or encourage visitation, e.g., on weekdays or during off-peak golfing months.

AUTHORITY NOTE: Promulgated in accordance with R.S. 36:204.

HISTORICAL NOTE: Promulgated by the Department of Culture, Recreation, and Tourism, Office of the Secretary, LR 33:251 (February 2007), amended by the Department of Culture, Recreation, and Tourism, Office of State Parks, LR 39:

§1123. Reservation Policy
[Formerly LAC 25:XI.523]

A. Tee time reservations will be taken one month in advance. A credit card or other form of deposit will be required to secure a time. Reservations will be accepted only from persons 18 years of age or older.

B. Groups will be allowed to book two, three, four, or five players per time slot. On weekends and holidays, groups will only be allowed to book fivesomes after 10 a.m.

C. Cancellation of reservations must be made at least 24 hours in advance. Cancellations made within 24 hours of the scheduled tee time might be subject to a 50 percent

surcharge. A change of reservation date or time will be considered a cancellation and treated accordingly.

AUTHORITY NOTE: Promulgated in accordance with R.S. 36:204.

HISTORICAL NOTE: Promulgated by the Department of Culture, Recreation, and Tourism, Office of the Secretary, LR 33:251 (February 2007), amended by the Department of Culture, Recreation, and Tourism, Office of State Parks, LR 39:

§1125. Refunds

[Formerly LAC 25:XI.525]

A. Rain checks will be issued at the discretion of the director for unfavorable changes in weather conditions, so long as the conditions stay unfavorable for golfing for more than 30 minutes. Credit will be given only for the percentage of holes not completed.

B. Refunds will not be issued to persons evicted for violations of these rules.

C. Refunds will not be issued to persons who choose to leave the course as a result of inclement weather before the director has decided that the change in weather will persist for more than 30 minutes.

AUTHORITY NOTE: Promulgated in accordance with R.S. 36:204.

HISTORICAL NOTE: Promulgated by the Department of Culture, Recreation, and Tourism, Office of the Secretary, LR 33:251 (February 2007), amended by the Department of Culture, Recreation, and Tourism, Office of State Parks, LR 39:

§1127. Tournament Procedure

[Formerly LAC 25:XI.527]

A. Fees

The maximum deposit fees that may be charged for tournament reservations are as follows:	*Maximum Fee*
Under 20 Players	$100
21 - 50 Players	$200
Over 51 Players	$300

1. Deposit fees may be waived at the director's discretion for a group that previously hosted a successful tournament.

B. Groups of 12 or more players will be booked as a tournament. Any group with three or more requested tee times will be allowed to contract a tournament.

C. Only the director or his designee may book a tournament. The tournament may be booked as far in advance as needed.

AUTHORITY NOTE: Promulgated in accordance with R.S. 36:204.

HISTORICAL NOTE: Promulgated by the Department of Culture, Recreation, and Tourism, Office of the Secretary, LR 33:252 (February 2007), amended by the Department of Culture, Recreation, and Tourism, Office of State Parks, LR 39:

§1129. Golf Cart Rental

[Formerly LAC 25:XI.529]

A. A valid driver's license is required to rent a golf cart. The renter must be able to safely use the cart while it is under his control.

B. Carts must be returned immediately after completion of play, in as good condition as originally rented. Any person who damages a golf cart under his or her rental control agrees to pay for necessary repairs.

C. Any person who rents a golf cart agrees to hold the course harmless for any damage caused to any person or the cart by its operation.

AUTHORITY NOTE: Promulgated in accordance with R.S. 36:204.

HISTORICAL NOTE: Promulgated by the Department of Culture, Recreation, and Tourism, Office of the Secretary, LR 33:252 (February 2007), amended by the Department of Culture, Recreation, and Tourism, Office of State Parks, LR 39:

§1131. Golfer Safety

[Formerly LAC 25:XI.531]

A. At the first sign of lightning in the immediate area, a course representatives will drive course to communicate suspension of play. Those who remain on the course after the lightning warning is given will be playing at their own risk.

B. All persons must exercise reasonable care while using course facilities and follow safety rules at all times. Each person assumes liability for his or her own safety, and the DCRT will not be responsible for accident or injury to any person or to others caused by that person's own recklessness.

AUTHORITY NOTE: Promulgated in accordance with R.S. 36:204.

HISTORICAL NOTE: Promulgated by the Department of Culture, Recreation, and Tourism, Office of the Secretary, LR 33:252 (February 2007), amended by the Department of Culture, Recreation, and Tourism, Office of State Parks, LR 39:

Part XI. Office of the Secretary

Chapter 5. Black Bear Golf Course

§501. Definitions

Repealed.

AUTHORITY NOTE: Promulgated in accordance with R.S. 36:204.

HISTORICAL NOTE: Promulgated by the Department of Culture, Recreation, and Tourism, Office of the Secretary, LR 33:249 (February 2007), repealed by the Department of Culture, Recreation, and Tourism, Office of State Parks, LR 39:

§503. General Authority and Purpose

Repealed.

AUTHORITY NOTE: Promulgated in accordance with R.S. 36:204.

HISTORICAL NOTE: Promulgated by the Department of Culture, Recreation, and Tourism, Office of the Secretary, LR 33:250 (February 2007), repealed by the Department of Culture, Recreation, and Tourism, Office of State Parks, LR 39:

§505. Course Property

Repealed.

AUTHORITY NOTE: Promulgated in accordance with R.S. 36:204.

HISTORICAL NOTE: Promulgated by the Department of Culture, Recreation, and Tourism, Office of the Secretary, LR 33:250 (February 2007), repealed by the Department of Culture, Recreation, and Tourism, Office of State Parks, LR 39:

§507. Golfing Etiquette

Repealed.

AUTHORITY NOTE: Promulgated in accordance with R.S. 36:204.

HISTORICAL NOTE: Promulgated by the Department of Culture, Recreation, and Tourism, Office of the Secretary, LR 33:250 (February 2007), repealed by the Department of Culture, Recreation, and Tourism, Office of State Parks, LR 39:

§509. Disorderly Conduct

Repealed.

AUTHORITY NOTE: Promulgated in accordance with R.S. 36:204.

HISTORICAL NOTE: Promulgated by the Department of Culture, Recreation, and Tourism, Office of the Secretary, LR 33:250 (February 2007), repealed by the Department of Culture, Recreation, and Tourism, Office of State Parks, LR 39:

§511. Business Solicitation

Repealed.

AUTHORITY NOTE: Promulgated in accordance with R.S. 36:204.

HISTORICAL NOTE: Promulgated by the Department of Culture, Recreation, and Tourism, Office of the Secretary, LR 33:250 (February 2007), repealed by the Department of Culture, Recreation, and Tourism, Office of State Parks, LR 39:

§513. Trespass

Repealed.

AUTHORITY NOTE: Promulgated in accordance with R.S. 36:204.

HISTORICAL NOTE: Promulgated by the Department of Culture, Recreation, and Tourism, Office of the Secretary, LR 33:250 (February 2007), repealed by the Department of Culture, Recreation, and Tourism, Office of State Parks, LR 39:

§515. Vehicle Use

Repealed.

AUTHORITY NOTE: Promulgated in accordance with R.S. 36:204.

HISTORICAL NOTE: Promulgated by the Department of Culture, Recreation, and Tourism, Office of the Secretary, LR 33:251 (February 2007), repealed by the Department of Culture, Recreation, and Tourism, Office of State Parks, LR 39:

§517. Fines and Enforcement of the Rules and Regulations

Repealed.

AUTHORITY NOTE: Promulgated in accordance with R.S. 36:204.

HISTORICAL NOTE: Promulgated by the Department of Culture, Recreation, and Tourism, Office of the Secretary, LR 33:251 (February 2007), repealed by the Department of Culture, Recreation, and Tourism, Office of State Parks, LR 39:

§519. Operating Schedule

Repealed.

AUTHORITY NOTE: Promulgated in accordance with R.S. 36:204.

HISTORICAL NOTE: Promulgated by the Department of Culture, Recreation, and Tourism, Office of the Secretary, LR 33:251 (February 2007), repealed by the Department of Culture, Recreation, and Tourism, Office of State Parks, LR 39:

§521. Course Fees

Repealed.

AUTHORITY NOTE: Promulgated in accordance with R.S. 36:204.

HISTORICAL NOTE: Promulgated by the Department of Culture, Recreation, and Tourism, Office of the Secretary, LR 33:251 (February 2007), repealed by the Department of Culture, Recreation, and Tourism, Office of State Parks, LR 39:

§523. Reservation Policy

Repealed.

AUTHORITY NOTE: Promulgated in accordance with R.S. 36:204.

HISTORICAL NOTE: Promulgated by the Department of Culture, Recreation, and Tourism, Office of the Secretary, LR 33:251 (February 2007), repealed by the Department of Culture, Recreation, and Tourism, Office of State Parks, LR 39:

§525. Refunds

Repealed.

AUTHORITY NOTE: Promulgated in accordance with R.S. 36:204.

HISTORICAL NOTE: Promulgated by the Department of Culture, Recreation, and Tourism, Office of the Secretary, LR 33:251 (February 2007), repealed by the Department of Culture, Recreation, and Tourism, Office of State Parks, LR 39:

§527. Tournament Procedure

Repealed.

AUTHORITY NOTE: Promulgated in accordance with R.S. 36:204.

HISTORICAL NOTE: Promulgated by the Department of Culture, Recreation, and Tourism, Office of the Secretary, LR 33:252 (February 2007), repealed by the Department of Culture, Recreation, and Tourism, Office of State Parks, LR 39:

§529. Golf Cart Rental

Repealed.

AUTHORITY NOTE: Promulgated in accordance with R.S. 36:204.

HISTORICAL NOTE: Promulgated by the Department of Culture, Recreation, and Tourism, Office of the Secretary, LR 33:252 (February 2007), repealed by the Department of Culture, Recreation, and Tourism, Office of State Parks, LR 39:

§531. Golfer Safety

Repealed.

AUTHORITY NOTE: Promulgated in accordance with R.S. 36:204.

HISTORICAL NOTE: Promulgated by the Department of Culture, Recreation, and Tourism, Office of the Secretary, LR 33:252 (February 2007), repealed by the Department of Culture, Recreation, and Tourism, Office of State Parks, LR 39:

Family Impact Statement

The proposed Rule has no known or foreseeable impact on any family as defined by R.S. 49:972(D) or on family formation, stability and autonomy.

Poverty Impact Statement

This proposed rule making will have no impact as set forth in R.S. 49:973.

Small Business Statement

The impact of the proposed Rule on small businesses as defined in the Regulatory Flexibility Act R.S. 49:965.6 has been considered. It is estimated that the proposed action will not have a significant adverse impact on small businesses.

Public Comments

All interested persons are invited to submit written comments on the proposed Rule to Stuart Johnson, Assistant Secretary, Office of State Parks, P.O. Box 44426, Baton Rouge, LA 70804. Such comments must be received no later than March 10, 2013 at 4 p.m.

Stuart Johnson
Assistant Secretary

FISCAL AND ECONOMIC IMPACT STATEMENT FOR ADMINISTRATIVE RULES
RULE TITLE: State Parks

I. ESTIMATED IMPLEMENTATION COSTS (SAVINGS) TO STATE OR LOCAL GOVERNMENT UNITS (Summary)

There will be no direct impact on expenditures of state or local governmental units as a result of the proposed rule changes.

The purpose of the proposed rule changes is to perform general editing, to update provisions to reflect changes made to methods of operations, programs and facilities offered, industry standards and statutory revisions. Additionally, the agency has revised its fee schedule to better reflect the fees charged by providers of similar facilities.

II. ESTIMATED EFFECT ON REVENUE COLLECTIONS OF STATE OR LOCAL GOVERNMENTAL UNITS (Summary)

There is an anticipated increase in revenue collections for the state through an increase of entrance fees at the state parks and the Audubon State Historic Site, an increase in fees charged for the rental of campsites at the state parks and an increase in the amount charged for the annual entrance pass.

Based on FY 12 visitation data and assuming no change in visitation, the agency estimates a resulting $1.37 million in additional self-generated revenue annually.

III. ESTIMATED COSTS AND/OR ECONOMIC BENEFITS TO DIRECTLY AFFECTED PERSONS OR NONGOVERNMENTAL GROUPS (Summary)

Individuals and groups will be affected by an increased cost to enter state parks and the Audubon State Historic Site and to utilize campsites at state parks. For those visiting the state parks for the day, the entrance fee will double from $1 to $2 and patrons renting campsites will pay an additional $2 per day per site. The cost to individuals visiting Audubon State Historic Site will vary from no increase to $4 per person. Individuals choosing to purchase an annual pass will pay $80 instead of the current $50.

IV. ESTIMATED EFFECT ON COMPETITION AND EMPLOYMENT (Summary)

The proposed rule change will have no impact on competition and employment. The increases in fees charged reflect periodic adjustments to keep Louisiana state parks fees aligned with those of neighboring states park systems and private campgrounds in Louisiana. Although the fees charged by private sector campgrounds and historic attractions will generally remain slightly higher than those charged by the state, the new fee structure will align with the fees charged at the state parks and historic sites with the private sector.

Stuart Johnson	Evan Brasseaux
Assistant Secretary	Staff Director
1302#046	Legislative Fiscal Office

NOTICE OF INTENT

Board of Elementary and Secondary Education

Bulletin 130—Regulations for the Evaluation and Assessment of School Personnel
(LAC 28:CXLVII.105, 301, 303, 305, 325, 701, and 905)

In accordance with R.S. 49:950 et seq., the Administrative Procedure Act, notice is hereby given that the Board of Elementary and Secondary Education approved for advertisement revisions to *Bulletin 130—Regulations for the Evaluation and Assessment of School Personnel*: §105. Framework for LEA Personnel Evaluation Programs, §301. Overview of Personnel Evaluation, §303. Measures of Growth in Student Learning—Value-Added Model, §305. Measures of Growth in Student Learning—Non-Tested Grades and Subjects, §325. Extenuating Circumstances, repeal §327. Statement of Assurance, §701. Annual Summary Reporting Format, and §905. Definitions. The policy contains revisions to the Compass support and evaluation system for teachers and leaders in response to educator feedback.

Title 28
EDUCATION
Part CXLVII. Bulletin 130—Regulations for the Evaluation and Assessment of School Personnel

Chapter 1. Overview

§105. Framework for LEA Personnel Evaluation Programs [Formerly §109]

A. ...

B. Local personnel evaluation plans defined by the board shall include, at a minimum, the following elements.

1. Job Descriptions. The LEA shall establish job descriptions for every category of teacher and administrator. All job descriptions shall contain the criteria for which the teacher or administrator shall be evaluated.

2. Professional Growth Planning Process. The LEA shall provide guidelines for teachers and administrators to develop a professional growth plan with their evaluators. Such plans must be designed to assist each teacher or administrator in demonstrating effective performance, as defined by this bulletin. Each plan will include objectives as well as the strategies that the teacher or administrator intends to use to attain each objective.

3. Observation/Data Collection Process. The evaluator or evaluators of each teacher and administrator shall conduct observations of teacher and administrator practice sufficient to gain a complete picture of performance and impart individualized feedback each year. This shall include a minimum of two observations per academic year and may include more observations, particularly for teachers or administrators that are not meeting expectations. At least one of these observations shall be announced and shall include a pre- and post-observation conference. One of the observations may be waived for teachers who have earned a rating of *Highly Effective* according to the value-added model in the previous year. Following all observations, evaluators shall provide evaluatees with feedback, including areas for commendation as well as areas for improvement. Additional evidence, such as data from periodic visits to the school and/or classroom as well as written materials or artifacts, may be used to inform evaluation.

4. Professional Development and Support. LEAs shall provide multiple opportunities for teachers and administrators to receive feedback, reflect on individual practice, and consider opportunities for improvement throughout the academic year, and shall provide intensive assistance plans to teachers and administrators, according to the requirements set forth in this bulletin.

5. Grievance Process. LEAs shall include in their local personnel evaluation plans a description of the procedures for resolving conflict and/or grievances relating to evaluation results in a fair, efficient, effective, and professional manner.

AUTHORITY NOTE: Promulgated in accordance with R.S. 17:6(A)(10), R.S. 17:391.10, R.S. 17:3881-3886, and R.S. 17:3901-3904, R.S. 17:3997, and R.S. 17:10.1.

HISTORICAL NOTE: Promulgated by the Board of Elementary and Secondary Education, LR 36:2251 (October 2010), amended LR 38:1215 (May 2012), LR 38:2359 (September 2012), LR 39:

Chapter 3. Personnel Evaluation

§301. Overview of Personnel Evaluation

A. Personnel evaluation for teachers and administrators shall be composed of two parts. Fifty percent of the evaluation shall be composed of applicable measure(s) of growth in student learning. The remaining 50 percent shall be based upon a qualitative assessment of teacher or administrator performance.

1. For teachers, the 50 percent of the evaluation based upon growth in student learning shall measure the growth of their students using data from the value-added model and/or student learning targets, according to guidelines provided by the department. For administrators, the 50 percent of the

evaluation based upon growth in student learning shall incorporate a school-wide measure of growth.

2. The 50 percent of the evaluation that is based on a qualitative measure of teacher and administrator performance shall include a minimum of two observations or site visits. This portion of the evaluation may include additional evaluative evidence, such as walk-through observation data and evaluation of written work products.

B. ...

AUTHORITY NOTE: Promulgated in accordance with R.S. 17:6(A)(10), R.S. 17:391.10, R.S. 17:3881-3886, and R.S. 17:3901-3904, R.S. 17:3997, and R.S. 17:10.1.

HISTORICAL NOTE: Promulgated by the Board of Elementary and Secondary Education, LR 38:1215 (May 2012), amended LR 38:2359 (September 2012). LR 39:

§303. Measures of Growth in Student Learning—Value-Added Model

A. A value-added model shall be used to measure student growth for the purposes of teacher and administrator evaluation, where available, according to guidelines provided by the department.

B. Value-added data shall be provided to teachers in grades and subjects that administer state-wide standardized tests and for which appropriate prior testing data is available. The value-added model shall not be applied for the purposes of evaluation in any cases in which there are fewer than ten students with value-added results assigned to an educator.

C. - F. …

AUTHORITY NOTE: Promulgated in accordance with R.S. 17:6(A)(10), R.S. 17:391.10, R.S. 17:3881-3886, and R.S. 17:3901-3904, R.S. 17:3997, R.S. 17:10.1.

HISTORICAL NOTE: Promulgated by the Board of Elementary and Secondary Education, LR 38:1216 (May 2012), amended LR 38:3123 (December 2012), LR 39:

§305. Measures of Growth in Student Learning—Non-Tested Grades and Subjects

A. ...

B. For teachers and administrators of non-tested grades and subjects (NTGS), for which there is little or no value-added data available, progress towards pre-determined student learning targets, as measured by state-approved common assessments, where available, shall govern the student growth component of the evaluation. Student learning targets shall include goals which express an expectation of growth in student achievement over a given period of time, as well as common measures for assessing attainment of those goals, such as an identified assessment and/or a body of evidence.

C. A minimum of two student learning targets shall be identified for each teacher in NTGS. The department shall provide an evaluative tool for evaluators to use in assessing the quality and attainment of student learning targets.

1. State-approved common assessments shall be used as part of the body of evidence measuring students' attainment of learning targets, where available. At the beginning of each academic year, the department shall publish a list of state-approved common assessments to be used in identified non-tested grades and subject areas.

2. Where no state-approved common assessments for NTGS are available, evaluatees and evaluators shall decide upon the appropriate assessment or assessments to measure students' attainment of learning targets.

3. LEAs may define consistent student learning targets across schools and classrooms for teachers with similar assignments, provided that they allow for ample flexibility to address the specific needs of students in each classroom.

D. - D.3.…

AUTHORITY NOTE: Promulgated in accordance with R.S. 17:6(A)(10), R.S. 17:391.10, R.S. 17:3881-3886, and R.S. 17:3901-3904, R.S. 17:3997, and R.S. 17:10.1.

HISTORICAL NOTE: Promulgated by the Board of Elementary and Secondary Education, LR 38:1216 (May 2012), amended LR 38:2359 (September 2012), LR 39:

§325. Extenuating Circumstances

A. ...

B. Evaluation results shall be invalidated for any teacher or administrator with 60 or more excused absences in a given academic year, due to approved leave, such as maternity leave, military leave, sick leave, or sabbatical leave.

C. For approved leave of fewer days and for any other extenuating circumstances that significantly compromise an educator's opportunity to impact student learning, district superintendents or CEOs may request invalidation of student achievement growth data with relation to the value-added assessment model by submitting such requests in a report to the State Superintendent of Education. Requests for invalidation of evaluation results shall be made prior to the state's release of annual value-added results and no later than June 1.

D. In cases where value-added data is invalidated, the teacher's principal or designee shall have discretion to determine the evaluation rating, based on the evidence available from students learning targets and observations.

AUTHORITY NOTE: Promulgated in accordance with R.S. 17:6(A)(10), R.S. 17:391.10, R.S. 17:3881-3886, and R.S. 17:3901-3904, R.S. 17:3997, and R.S. 17:10.1.

HISTORICAL NOTE: Promulgated by the Board of Elementary and Secondary Education, LR 38:1220 (May 2012), amended LR 38:2361 (September 2012), LR 39:

Chapter 7. Reporting and Monitoring

§701. Annual Summary Reporting Format

A. Each LEA will submit an annual personnel evaluation report of the most recent academic year to the department by July 15. Information included in the reporting format reflects data deemed necessary in presenting annual reports to the department, as well as to the LEAs. The reporting of such information includes a variety of responses directed toward the collection of data useful to an analysis of the evaluation process from a statewide perspective. Items that are reported by the LEAs on forms provided by the department include, but are not limited to, the following items:

1. individual-level teacher evaluation results, by teacher;

2. the number of certified and other professional personnel, by categories, who were evaluated as performing ineffectively;

3. the number of certified and other professional personnel, by categories, who were terminated because of not having improved performance within the specified time allotment (Include the reasons for termination.);

4. the number of certified personnel, by categories, who improved (from ineffective to effective) as a result of the evaluation process;

5. the number of formal grievances filed as a result of ineffective performance ratings or disagreement with evaluation results; and

6. the number of evaluatees who received intensive assistance.

AUTHORITY NOTE: Promulgated in accordance with R.S. 17:6(A)(10), R.S. 17:391.10, R.S. 17:3881-3886, and R.S. 17:3901-3904, R.S. 17:3997, and R.S. 17:10.1.

HISTORICAL NOTE: Promulgated by the Board of Elementary and Secondary Education, LR 36:2253 (October 2010), amended LR 38:1220 (May 2012), LR 38:2361 (September 2012), LR 39:

Chapter 9. General Provisions

§905. Definitions

A. In order that consistency in terminology be maintained on a statewide basis, the department has established a list of terms and definitions. Careful consideration of each should be given during the training and implementation of personnel evaluation programs. The definitions below must be adopted by all LEAs. If additional terms are necessary in establishing a clear and concise understanding of evaluation procedures, they must be included in the LEA local personnel evaluation plan.

Accountability—shared responsibility for actions relating to the education of children.

Administrator—any person who serves in an academic leadership role at the school-level and is employed in a professional capacity other than a teacher. Principals, assistant principals, and academic deans shall be considered administrators according to this definition.

Beginning Teacher—any teacher in their first three years of the profession.

Board—state Board of Elementary and Secondary Education.

Certified School Personnel—those persons whose positions require certification.

Charter School—an independent public school that provides a program of elementary and/or secondary education established pursuant to and in accordance with the provisions of the Louisiana Charter School Law to provide a learning environment that will improve student achievement.

Classroom Visitation—an informal visit to a classroom of sufficient duration to monitor progress toward achievement of professional growth plan objectives and to provide support or assistance.

Common Assessment—a state-approved assessment to be used for measuring student growth in grades and subjects where value-added data is not available.

Components of Effective Teaching—the elements of teaching performance defined by the board in formal, recognized collaboration with educators and other stakeholders involved in education, to be critical to providing effective classroom instruction.

Competencies—skills, knowledge, and abilities required to demonstrate a particular level of performance.

Criteria—demonstrable levels of performance upon which a judgment may be based.

Department—Louisiana Department of Education.

Due Process—fair and impartial treatment, including notice and an opportunity to be heard.

Duties—those actions normally required of a position as assigned and/or described in the position description that are necessary to enable the class, school, or school district to accomplish its objectives.

Educational Leader—a person who is certified to serve in any school or district leadership capacity with the exception of superintendent.

Evaluation—process by which a local board monitors continuing performance of its teachers and administrators annually, by considering judgments concerning the professional accomplishments and competencies of a certified employee, as well as other professional personnel, based on a broad knowledge of the area of performance involved, the characteristics of the situation of the individual being evaluated, and the specific standards of performance pre-established for the position.

Evaluatee—teacher or administrator undergoing evaluation.

Evaluator—one who evaluates; the school principal or assistant principal or respective supervisory level designees charged with evaluating teachers or the superintendent or other LEA-level supervisor charged with evaluating administrators.

Formal Site Visit—an announced site visit by an administrator's evaluator, that is preceded by a pre-visit conference and followed by a post-visit conference in which the administrator is provided feedback on his/her performance.

Grievance—a procedure that provides a fair and objective resolution of complaint by an evaluatee that the evaluation is inaccurate due to evaluator bias, omission, or error.

Intensive Assistance Plan—the plan that is implemented when it is determined, through the evaluation process, that personnel have not meet the standards of effectiveness. This plan includes the specific steps the teacher or administrator shall take to improve; the assistance, support, and resources to be provided by the LEA; an expected timeline for achieving the objectives and the procedure for monitoring progress, including observations and conferences; and the action to be taken if improvement is not demonstrated.

Job Description—a competency-based summary of the position title, qualification, supervisor, supervisory responsibilities, duties, job tasks, and standard performance criteria, including improving student achievement, that specify the level of job skill required. Space shall be provided for signature and date.

Local Board—governing authority of the local education agency, parish/city school or local school system.

Local Education Agency (LEA)—city, parish, or other local public school system, including charter schools.

Non-Tested Grades and Subjects (NTGS)—grades and subjects for which a value-added score is not available for teachers or other certified personnel.

Objective—a devised accomplishment that can be verified within a given time, under specifiable conditions, and by evidence of achievement.

Observation—the process of gathering facts, noting occurrences, and documenting evidence of performance and delivering aligned, individualized feedback to the evaluatee.

Observer—one who gathers evidence to be used in the evaluation process through the observation of educator performance.

Performance Expectations—the elements of effective leadership approved by the board that shall be included as evaluation criteria for all building-level administrators.

Performance Standards—the behaviors and actions upon which performance is evaluated.

Post-Observation Conference—a discussion between the evaluatee and evaluator for the purpose of reviewing an observation and sharing commendations, insights, and recommendations for improvement.

Pre-Observation Conference—a discussion between the evaluatee and the evaluator which may occur~~s~~ prior to an observation; the purposes are to share information about the lesson to be observed and to clarify questions that may occur after reviewing of the lesson plan.

Professional Growth Plan—a written plan developed to enhance the skills and performance of an evaluatee. The plan includes specific goal(s), objective(s), action plans, timelines, opportunities for reflection, and evaluation criteria.

Self-Evaluation/Self-Reflection—the process of making considered judgments of one's own performance concerning professional accomplishments and competencies as a certified employee or other professional person based upon personal knowledge of the area of performance involved, the characteristics of the given situation, and the specific standards for performance pre-established for the position; to be submitted by the evaluatee to the appropriate evaluator for use in the compilation of the individual's evaluation.

Standard Certificate—a credential issued by the state to an individual who has met all requirements for full certification as a teacher.

Standard of Effectiveness—adopted by the State Board of Elementary and Secondary Education as the final composite score required for teacher or administrator performance to be considered *Effective*.

Student Learning Target—a goal which expresses an expectation of growth in student achievement over a given period of time, as measured by an identified assessment and/or body of evidence.

Teacher—any person who provides direct instruction or direct instructional support to students, to whom he/she has been formally assigned. Classroom teachers, special education teachers, librarians, and guidance counselors shall be considered teachers according to this definition.

Teachers of Record—educators who are responsible for a portion of a student's learning outcomes within a subject/course.

Value-Added—the use of prior achievement history and appropriate demographic variables to estimate typical achievement outcomes through a statistical model for students in specific content domains based on a longitudinal data set derived from students who take state-mandated tests in Louisiana for the purpose of comparing typical and actual achievement.

AUTHORITY NOTE: Promulgated in accordance with R.S. 17:6(A)(10), R.S. 17:391.10, R.S. 17:3881-3886, and R.S. 17:3901-3904, R.S. 17:3997, R.S. 17:10.1.

HISTORICAL NOTE: Promulgated by the Board of Elementary and Secondary Education, LR 38:1222 (May 2012), amended LR 38:2362 (September 2012), LR 39:

Family Impact Statement

In accordance with Section 953 and 974 of Title 49 of the Louisiana Revised Statutes, there is hereby submitted a Family Impact Statement on the Rule proposed for adoption, repeal or amendment. All Family Impact Statements shall be kept on file in the state board office which has adopted, amended, or repealed a Rule in accordance with the applicable provisions of the law relating to public records.

1. Will the proposed Rule affect the stability of the family? No.
2. Will the proposed Rule affect the authority and rights or parents regarding the education and supervision of their children? No.
3. Will the proposed Rule affect the functioning of the family? No.
4. Will the proposed Rule affect family earnings and family budget? No.
5. Will the proposed Rule affect the behavior and personal responsibility of children? No.
6. Is the family or a local government able to perform the function as contained in the proposed Rule? Yes.

Poverty Impact Statement

In accordance with Section 973 of Title 49 of the Louisiana Revised Statutes, there is hereby submitted a Poverty Impact Statement on the Rule proposed for adoption, amendment, or repeal. All Poverty Impact Statements shall be in writing and kept on file in the state agency which has adopted, amended, or repealed a Rule in accordance with the applicable provisions of the law relating to public records. For the purposes of this Section, the word "poverty" means living at or below one hundred percent of the federal poverty line.

1. Will the proposed Rule affect the household income, assets, and financial security? No.
2. Will the proposed Rule affect early childhood development and preschool through postsecondary education development? Yes.
3. Will the proposed Rule affect employment and workforce development? Yes.
4. Will the proposed Rule affect taxes and tax credits? No.
5. Will the proposed Rule affect child and dependent care, housing, health care, nutrition, transportation, and utilities assistance? No.

Small Business Statement

The impact of the proposed Rule on small businesses as defined in the Regulatory Flexibility Act has been considered. It is estimated that the proposed action is not expected to have a significant adverse impact on small businesses. The agency, consistent with health, safety, environmental and economic welfare factors has considered and, where possible, utilized regulatory methods in the drafting of the proposed Rule that will accomplish the objectives of applicable statutes while minimizing the adverse impact of the proposed Rule on small businesses.

Public Comments

Interested persons may submit written comments via the U.S. Mail until 4:30 p.m., March 11, 2013, to Heather Cope,

State Board of Elementary and Secondary Education, P.O. Box 94064, Capitol Station, Baton Rouge, LA 70804-9064.

Heather Cope
Executive Director

FISCAL AND ECONOMIC IMPACT STATEMENT FOR ADMINISTRATIVE RULES
RULE TITLE: Bulletin 130—Regulations for the Evaluation and Assessment of School Personnel

I. ESTIMATED IMPLEMENTATION COSTS (SAVINGS) TO STATE OR LOCAL GOVERNMENT UNITS (Summary)

The proposed policy change will have no implementation costs other than $300 to print and disseminate the proposed action. The proposed policy will provide more flexibility in the school personnel evaluation process allowing principals more input on the teacher's evaluation.

II. ESTIMATED EFFECT ON REVENUE COLLECTIONS OF STATE OR LOCAL GOVERNMENTAL UNITS (Summary)

The proposed policy will have no effect on revenue collections of state or local governmental units.

III. ESTIMATED COSTS AND/OR ECONOMIC BENEFITS TO DIRECTLY AFFECTED PERSONS OR NONGOVERNMENTAL GROUPS (Summary)

No costs and/or economic benefits are anticipated for directly affected persons or non-governmental groups.

IV. ESTIMATED EFFECT ON COMPETITION AND EMPLOYMENT (Summary)

The proposed policy will have no effect on competition and employment.

Beth Scioneaux
Deputy Superintendent
1302#023

Evan Brasseaux
Staff Director
Legislative Fiscal Office

NOTICE OF INTENT

Department of Environmental Quality
Office of the Secretary
Legal Division

2012 Annual Incorporation by Reference
of Certain Federal Air Quality Regulations
(LAC 33:III.506, 507, 2160, 3003,
5116, 5122, 5311 and 5901)(AQ337ft)

Under the authority of the Environmental Quality Act, R.S. 30:2001 et seq., and in accordance with the provisions of the Administrative Procedure Act, R.S. 49:950 et seq., the secretary gives notice that rulemaking procedures have been initiated to amend the Air regulations, LAC 33:III.506, 507, 2160, 3003, 5116, 5122, 5311 and 5901 (Log #AQ337ft).

This Rule is identical to federal regulations found in 40 CFR Part 51, Appendix M, 40 CFR Part 60, 40 CFR Part 61, 40 CFR Part 63, 40 CFR Part 68, 40 CFR Part 70.6(a) and 40 CFR Part 96, which are applicable in Louisiana. For more information regarding the federal requirement, contact the Regulation Development Section at (225) 219-3985 or P.O. Box 4302, Baton Rouge, LA 70821-4302. No fiscal or economic impact will result from the Rule. This Rule will be promulgated in accordance with the procedures in R.S. 49:953(F)(3) and (4).

This Rule incorporates by reference (IBR) into the *Louisiana Administrative Code*, LAC 33:III, the following federal regulations included in the July 1, 2012 edition of the *Code of Federal Regulation* (CFR): 40 CFR Parts 51, Appendix M, 60, 61, 63, 68, 70.6(a) and 96. Any exception to the IBR is explicitly listed in the proposed Rule. The Rule updates the references to July 1, 2012, for Standard of Performance for New Stationary Sources, 40 CFR Part 60. In addition, the provisions of 40 CFR Part 60 Subpart OOOO are incorporated by reference, establishing new source performance standards for crude oil and natural gas production, along with the transmission and distribution industry. This Rule also updates the references to July 1, 2012, for the National Emission Standards for Hazardous Air Pollutants (NESHAP) and for NESHAP for source categories, 40 CFR Parts 61 and 63. In order for Louisiana to maintain equivalency with federal regulations, certain regulations in the July 1, 2012 edition of the *Code of Federal Regulations*, must be adopted into the *Louisiana Administrative Code*. This rulemaking is also necessary to maintain delegation authority granted to Louisiana by the Environmental Protection Agency.

The basis and rationale for this Rule are to mirror the federal regulations as they apply to Louisiana's affected sources.

This Rule meets an exception listed in R.S. 30:2019(D)(2) and R.S. 49:953(G)(3); therefore, no report regarding environmental/health benefits and social/economic costs is required.

Title 33
ENVIRONMENTAL QUALITY
Part III. Air

Chapter 5. Permit Procedures

§506. Clean Air Interstate Rule Requirements

A. - B.4. …

C. Annual Sulfur Dioxide. Except as specified in this Section, The federal SO_2 model rule, published in the *Code of Federal Regulation* at 40 CFR Part 96, July 1, 2012, is hereby incorporated by reference, except for Subpart III-CAIR SO_2 OPT-in Units and all references to opt-in units.

D. The volumes containing those federal regulations incorporated by reference may be obtained from the Superintendent of Documents, United States Government Printing Office, Washington, D.C. 20402 or their website, www.gpoaccess.gov/cfr/index.html.

E. …

AUTHORITY NOTE: Promulgated in accordance with R.S. 30.2054.

HISTORICAL NOTE: Promulgated by the Department of Environmental Quality, Office of the Secretary, Legal Affairs Division, LR 32:1597 (September 2006), amended LR 33:1622 (August 2007), LR 33:2083 (October 2007), LR 34:978 (June 2008), LR 35:1107 (June 2009), LR 36:2272 (October 2010), repromulgated LR 36:2551 (November 2010), amended LR 37:2989 (October 2011), LR 38:1229 (May 2012), amended by the Office of the Secretary, Legal Division, LR 39:

§507. Part 70 Operating Permits Program

A. - B.1. …

2. No Part 70 source may operate after the time that the owner or operator of such source is required to submit a permit application under Subsection C of this Section, unless

an application has been submitted by the submittal deadline and such application provides information addressing all applicable sections of the application form and has been certified as complete in accordance with LAC 33:III.517.B.1. No Part 70 source may operate after the deadline provided for supplying additional information requested by the permitting authority under LAC 33:III.519, unless such additional information has been submitted within the time specified by the permitting authority. Permits issued to the Part 70 source under this Section shall include the elements required by 40 CFR 70.6. The department hereby adopts and incorporates by reference the provisions of 40 CFR 70.6(a), July 1, 2012. Upon issuance of the permit, the Part 70 source shall be operated in compliance with all terms and conditions of the permit. Noncompliance with any federally applicable term or condition of the permit shall constitute a violation of the Clean Air Act and shall be grounds for enforcement action; for permit termination, revocation and reissuance, or revision; or for denial of a permit renewal application.

C. - J.5. …

AUTHORITY NOTE: Promulgated in accordance with R.S. 30:2011, 2023, 2024, and 2054.

HISTORICAL NOTE: Promulgated by the Department of Environmental Quality, Office of Air Quality and Nuclear Energy, Air Quality Division, LR 13:741 (December 1987), amended by the Office of Air Quality and Radiation Protection, Air Quality Division, LR 19:1420 (November 1993), LR 20:1375 (December 1994), amended by the Office of Environmental Assessment, Environmental Planning Division, LR 26:2447 (November 2000), LR 27:2229 (December 2001), LR 28:994 (May 2002), LR 29:698 (May 2003), LR 30:1008 (May 2004), amended by the Office of Environmental Assessment, LR 31:1061 (May 2005), LR 31:1568 (July 2005), amended by the Office of the Secretary, Legal Affairs Division, LR 31:2437 (October 2005), LR 32:808 (May 2006), LR 33:1619 (August 2007), LR 33:2083 (October 2007), LR 33:2630 (December 2007), LR 34:1391 (July 2008), LR 35:1107 (June 2009), LR 36:2272 (October 2010), LR 37:2990 (October 2011), LR 38:1229 (May 2012), amended by the Office of the Secretary, Legal Division, LR 39:

Chapter 21. Control of Emission of Organic Compounds

Subchapter N. Method 43—Capture Efficiency Test Procedures

Editor's Note: This Subchapter was moved and renumbered from Chapter 61 (December 1996).

§2160. Procedures

A. Except as provided in Subsection C of this Section, the regulations at 40 CFR Part 51, Appendix M, July 1, 2012, are hereby incorporated by reference.

B. - C.2.b.iv. …

AUTHORITY NOTE: Promulgated in accordance with R.S. 30:2054.

HISTORICAL NOTE: Promulgated by the Department of Environmental Quality, Office of Air Quality and Radiation Protection, Air Quality Division, LR 17:653 (July 1991), amended LR 22:1212 (December 1996), LR 23:1680 (December 1997), LR 24:1286 (July 1998), amended by the Office of Environmental Assessment, Environmental Planning Division, LR 27:1224 (August 2001), LR 29:698 (May 2003), LR 30:1009 (May 2004), amended by the Office of Environmental Assessment, LR 31:1568 (July 2005), amended by the Office of the Secretary, Legal Affairs Division, LR 32:809 (May 2006), LR 33:1620 (August 2007), LR 34:1391 (July 2008), LR 35:1107 (June 2009), LR 36:2272 (October 2010), LR 37:2990 (October 2011), LR 38:1230 (May 2012), amended by the Office of the Secretary, Legal Division, LR 39:

Chapter 30. Standards of Performance for New Stationary Sources (NSPS)

Subchapter A. Incorporation by Reference

§3003. Incorporation by Reference of 40 *Code of Federal Regulations* (CFR) Part 60

A. Except for 40 CFR Part 60, Subpart AAA, and as modified in this Section, Standards of Performance for New Stationary Sources, published in the *Code of Federal Regulations* at 40 CFR Part 60, July 1, 2012, are hereby incorporated by reference as they apply to the state of Louisiana. Also incorporated by reference are the following revisions to 40 CFR Part 60: Subpart OOOO as promulgated on August 16, 2012, in the *Federal Register*, 77 FR 49490-49600.

B. - C. …

AUTHORITY NOTE: Promulgated in accordance with R.S. 30:2054.

HISTORICAL NOTE: Promulgated by the Department of Environmental Quality, Office of Air Quality and Radiation Protection, Air Quality Division, LR 22:1212 (December 1996), amended LR 23:1681 (December 1997), LR 24:1287 (July 1998), LR 24:2238 (December 1998), amended by the Office of Environmental Assessment, Environmental Planning Division, LR 25:1239 (July 1999), LR 25:1797 (October 1999), LR 26:1607 (August 2000), LR 26:2460, 2608 (November 2000), LR 27:2229 (December 2001), LR 28:994 (May 2002), LR 28:2179 (October 2002), LR 29:316 (March 2003), LR 29:698 (May 2003), LR 30:1009 (May 2004), amended by the Office of Environmental Assessment, LR 31:1568 (July 2005), amended by the Office of the Secretary, Legal Affairs Division, LR 31:2446 (October 2005), LR 32:809 (May 2006), LR 32:1596 (September 2006), LR 33:1620 (August 2007), LR 33:2092 (October 2007), LR 33:2626 (December 2007), LR 34:1391 (July 2008), LR 35:1107 (June 2009), LR 36:2273 (October 2010), LR 37:2990 (October 2011), LR 38:1230 (May 2012), amended by the Office of the Secretary, Legal Division, LR 38:2754 (November 2012), LR 39:

Chapter 51. Comprehensive Toxic Air Pollutant Emission Control Program

Subchapter B. Incorporation by Reference of 40 CFR Part 61 (National Emission Standards for Hazardous Air Pollutants)

§5116. Incorporation by Reference of 40 CFR Part 61 (National Emission Standards for Hazardous Air Pollutants)

A. Except as modified in this Section and specified below, National Emission Standards for Hazardous Air Pollutants, published in the *Code of Federal Regulations* at 40 CFR Part 61, July 1, 2012, and specifically listed in the following table, are hereby incorporated by reference as they apply to sources in the state of Louisiana.

40 CFR Part 61	Subpart/Appendix Heading
* * *	
[See Prior Text in Subpart A - Appendix C]	

B. - C. …

AUTHORITY NOTE: Promulgated in accordance with R.S. 30:2054.

HISTORICAL NOTE: Promulgated by the Department of Environmental Quality, Office of Air Quality and Radiation Protection, Air Quality Division, LR 23:61 (January 1997),

amended LR 23:1658 (December 1997), LR 24:1278 (July 1998), amended by the Office of Environmental Assessment, Environmental Planning Division, LR 25:1464 (August 1999), LR 25:1797 (October 1999), LR 26:2271 (October 2000), LR 27:2230 (December 2001), LR 28:995 (May 2002), LR 28:2179 (October 2002), LR 29:699 (May 2003), LR 30:1009 (May 2004), amended by the Office of Environmental Assessment, LR 31:1569 (July 2005), amended by the Office of the Secretary, Legal Affairs Division, LR 31:2448 (October 2005), LR 32:809 (May 2006), LR 33:1620 (August 2007), LR 33:2094 (October 2007), LR 34:1391 (July 2008), LR 35:1108 (June 2009), LR 36:2273 (October 2010), LR 37:2990 (October 2011), LR 38:1230 (May 2012), amended by the Office of the Secretary, Legal Division, LR 39:

Subchapter C. Incorporation by Reference of 40 CFR Part 63 (National Emission Standards for Hazardous Air Pollutants for Source Categories) as It Applies to Major Sources

§5122. Incorporation by Reference of 40 CFR Part 63 (National Emission Standards for Hazardous Air Pollutants for Source Categories) as It Applies to Major Sources

A. Except as modified in this Section and specified below, National Emission Standards for Hazardous Air Pollutants for Source Categories, published in the *Code of Federal Regulations* at 40 CFR Part 63, July 1, 2012, are hereby incorporated by reference as they apply to major sources in the state of Louisiana.

B. - C.3. …

AUTHORITY NOTE: Promulgated in accordance with R.S. 30:2054.

HISTORICAL NOTE: Promulgated by the Department of Environmental Quality, Office of Air Quality and Radiation Protection, Air Quality Division, LR 23:61 (January 1997), amended LR 23:1659 (December 1997), LR 24:1278 (July 1998), LR 24:2240 (December 1998), amended by the Office of Environmental Assessment, Environmental Planning Division, LR 25:1464 (August 1999), LR 25:1798 (October 1999), LR 26:690 (April 2000), LR 26:2271 (October 2000), LR 27:2230 (December 2001), LR 28:995 (May 2002), LR 28:2180 (October 2002), LR 29:699 (May 2003), LR 29:1474 (August 2003), LR 30:1010 (May 2004), amended by the Office of the Secretary, Legal Affairs Division, LR 31:2449 (October 2005), LR 31:3115 (December 2005), LR 32:810 (May 2006), LR 33:1620 (August 2007), LR 33:2095 (October 2007), LR 33:2627 (December 2007), LR 34:1392 (July 2008), LR 35:1108 (June 2009), LR 36:2273 (October 2010), LR 37:2991 (October 2011), LR 38:1231 (May 2012), amended by the Office of the Secretary, Legal Division, LR 39:

Chapter 53. Area Sources of Toxic Air Pollutants

Subchapter B. Incorporation by Reference of 40 CFR Part 63 (National Emission Standards for Hazardous Air Pollutants for Source Categories) as It Applies to Area Sources

§5311. Incorporation by Reference of 40 CFR Part 63 (National Emission Standards for Hazardous Air Pollutants for Source Categories) as It Applies to Area Sources

A. Except as modified in this Section and specified below, National Emission Standards for Hazardous Air Pollutants for Source Categories, published in the *Code of Federal Regulations* at 40 CFR Part 63, July 1, 2012, are hereby incorporated by reference as they apply to area sources in the state of Louisiana.

B. - C. …

AUTHORITY NOTE: Promulgated in accordance with R.S. 30:2054.

HISTORICAL NOTE: Promulgated by the Department of Environmental Quality, Office of Air Quality and Radiation Protection, Air Quality Division, LR 23:63 (January 1997), amended LR 23:1660 (December 1997), LR 24:1279 (July 1998), amended by the Office of Environmental Assessment, Environmental Planning Division, LR 25:1464 (August 1999), LR 27:2230 (December 2001), LR 28:995 (May 2002), LR 28:2180 (October 2002), LR 29:699 (May 2003), LR 30:1010 (May 2004), amended by the Office of Environmental Assessment, LR 31:1569 (July 2005), amended by the Office of the Secretary, Legal Affairs Division, LR 31:2451 (October 2005), LR 32:810 (May 2006), LR 33:1620 (August 2007), LR 33:2096 (October 2007), LR 34:1392 (July 2008), LR 35:1108 (June 2009), LR 36:2274 (October 2010), LR 37:2991 (October 2011), LR 38:1231 (May 2012), amended by the Office of the Secretary, Legal Division, LR 38:2756 (November 2012), LR 39:

Chapter 59. Chemical Accident Prevention and Minimization of Consequences

Subchapter A. General Provisions

§5901. Incorporation by Reference of Federal Regulations

A. Except as provided in Subsection C of this Section, the department incorporates by reference 40 CFR Part 68, July 1, 2012.

B. - C.6. …

* * *

AUTHORITY NOTE: Promulgated in accordance with R.S. 30:2054 and 30:2063.

HISTORICAL NOTE: Promulgated by the Department of Environmental Quality, Office of Air Quality and Radiation Protection, Air Quality Division, LR 20:421 (April 1994), amended LR 22:1124 (November 1996), repromulgated LR 22:1212 (December 1996), amended LR 24:652 (April 1998), LR 25:425 (March 1999), amended by the Office of Environmental Assessment, Environmental Planning Division, LR 26:70 (January 2000), LR 26:2272 (October 2000), LR 28:463 (March 2002), LR 29:699 (May 2003), LR 30:1010 (May 2004), amended by the Office of Environmental Assessment, LR 30:2463 (November 2004), LR 31:1570 (July 2005), amended by the Office of the Secretary, Legal Affairs Division, LR 32:810 (May 2006), LR 33:1621 (August 2007), LR 34:1392 (July 2008), LR 35:1109 (June 2009), LR 36:2274 (October 2010), LR 37:2991 (October 2011), LR 38:1231 (May 2012), amended by the Office of the Secretary, Legal Division, LR 39:

Family Impact Statement

This Rule has no known impact on family formation, stability, and autonomy as described in R.S. 49:972.

Poverty Impact Statement

This Rule has no known impact on poverty as described in R.S. 49:973.

Public Comments

All interested persons are invited to submit written comments on the proposed regulation. Persons commenting should reference this proposed regulation by AQ337ft. Such comments must be received no later than March 27, 2013, at 4:30 p.m., and should be sent to Deidra Johnson, Attorney Supervisor, Office of the Secretary, Legal Division, P.O. Box 4302, Baton Rouge, LA 70821-4302 or to fax (225) 219-4068 or by e-mail to deidra.johnson@la.gov. The comment period for this Rule ends on the same date as the public hearing. Copies of this proposed regulation can be purchased by contacting the DEQ Public Records Center at (225) 219-3168. Check or money order is required in advance for each

copy of AQ337ft. This regulation is available on the internet at www.deq.louisiana.gov/portal/tabid/1669/default.aspx.

Public Hearing

A public hearing will be held on March 27, 2013, at 1:30 p.m. in the Galvez Building, Oliver Pollock Conference Room, 602 North Fifth Street, Baton Rouge, LA 70802. Interested persons are invited to attend and submit oral comments on the proposed amendments. Should individuals with a disability need an accommodation in order to participate, contact Deidra Johnson at the address given below or at (225) 219-3985. Two hours of free parking are allowed in the Galvez Garage with a validated parking ticket.

This proposed regulation is available for inspection at the following DEQ office locations from 8 a.m. until 4:30 p.m.: 602 North Fifth Street, Baton Rouge, LA 70802; 1823 Highway 546, West Monroe, LA 71292; State Office Building, 1525 Fairfield Avenue, Shreveport, LA 71101; 1301 Gadwall Street, Lake Charles, LA 70615; 111 New Center Drive, Lafayette, LA 70508; 110 Barataria Street, Lockport, LA 70374; 201 Evans Road, Bldg. 4, Suite 420, New Orleans, LA 70123.

Herman Robinson, CPM
Executive Counsel

1302#025

NOTICE OF INTENT

Department of Environmental Quality
Office of the Secretary
Legal Division

Regulated New Source Review (NSR) Pollutant
(LAC 33:III.509)(AQ340ft)

Under the authority of the Environmental Quality Act, R.S. 30:2001 et seq., and in accordance with the provisions of the Administrative Procedure Act, R.S. 49:950 et seq., the secretary gives notice that rulemaking procedures have been initiated to amend the Air regulation, LAC 33:III.509 (Log #AQ340ft).

This Rule is identical to federal regulations found in 40 CFR 51.166(b)(49), which are applicable in Louisiana. For more information regarding the federal requirement, contact the Regulation Development Section at (225) 219-3985 or P.O. Box 4302, Baton Rouge, LA 70821-4302. No fiscal or economic impact will result from the Rule. This Rule will be promulgated in accordance with the procedures in R.S. 49:953(F)(3) and (4).

This Rule will revise the definition of *regulated new source review (NSR) pollutant* in LAC 33:III.509.B consistent with the corrected federal definition at 40 CFR 51.166(b)(49). On October 25, 2012, the Environmental Protection Agency (EPA) revised the definition of "regulated NSR pollutant" to correct "an inadvertent error made in 2008 when the EPA issued its rule to implement the New Source Review (NSR) program for fine particles with an aerodynamic diameter of less than or equal to 2.5 micrometers (PM2.5)." The revision to the federal rule "removes a general requirement in the definition of 'regulated NSR pollutant' to include condensable PM when measuring one of the emissions-related indicators for particulate matter (PM) known as 'particulate matter emissions' in the context of the PSD and NSR regulations."

LDEQ adopted the provisions of the aforementioned 2008 rule (i.e., "Implementation of the New Source Review (NSR) Program for Particulate Matter Less Than 2.5 Micrometers (PM2.5)," 73 FR 28321, May 16, 2008) on June 20, 2011 (AQ318).

The basis and rational for this Rule are to revise the definition of *regulated new source review (NSR) pollutant* in LAC 33:III.509.B.

This Rule meets an exception listed in R.S. 30:2019(D)(2) and R.S. 49:953(G)(3); therefore, no report regarding environmental/health benefits and social/economic costs is required.

Title 33
ENVIRONMENTAL QUALITY
Part III. Air

Chapter 5. Permit Procedures

§509. Prevention of Significant Deterioration

A. - A.5. …

B. Definitions. For the purpose of this Section, the terms below shall have the meaning specified herein as follows.

* * *

Regulated New Source Review (NSR) Pollutant—

a. - d. …

e. $PM_{2.5}$ emissions and PM_{10} emissions shall include gaseous emissions from a source or activity which condense to form particulate matter at ambient temperatures. On or after January 1, 2011, such condensable particulate matter shall be accounted for in applicability determinations and in establishing emissions limitations for $PM_{2.5}$ and PM_{10} in PSD permits. Compliance with emissions limitations for $PM_{2.5}$ and PM_{10} issued prior to this date shall not be based on condensable particulate matter. Applicability determinations made prior to this date without accounting for condensable particulate matter shall not be considered in violation of this Section.

* * *

C. - AA.15.b. …

AUTHORITY NOTE: Promulgated in accordance with R.S. 30:2054.

HISTORICAL NOTE: Promulgated by the Department of Environmental Quality, Office of Air Quality and Nuclear Energy, Air Quality Division, LR 13:741 (December 1987), amended LR 14:348 (June 1988), LR 16:613 (July 1990), amended by the Office of Air Quality and Radiation Protection, Air Quality Division, LR 17:478 (May 1991), LR 21:170 (February 1995), LR 22:339 (May 1996), LR 23:1677 (December 1997), LR 24:654 (April 1998), LR 24:1284 (July 1998), repromulgated LR 25:259 (February 1999), amended by the Office of Environmental Assessment, Environmental Planning Division, LR 26:2447 (November 2000), LR 27:2234 (December 2001), amended by the Office of the Secretary, Legal Affairs Division, LR 31:2437 (October 2005), LR 31:3135, 3156 (December 2005), LR 32:1600 (September 2006), LR 32:1843 (October 2006), LR 36:2556 (November 2010), LR 37:1148 (April 2011), repromulgated LR 37:1389 (May 2011), LR 37:1570 (June 2011), repromulgated LR 37:2146 (July 2011), amended LR 38:3163 (December 2012), LR 39:

Family Impact Statement

This Rule has no known impact on family formation, stability, and autonomy as described in R.S. 49:972.

Poverty Impact Statement

This Rule has no known impact on poverty as described in R.S. 49:973.

Public Comments

All interested persons are invited to submit written comments on the proposed regulation. Persons commenting should reference this proposed regulation by AQ340ft. Such comments must be received no later than March 27, 2013, at 4:30 p.m., and should be sent to Deidra Johnson, Attorney Supervisor, Office of the Secretary, Legal Division, P.O. Box 4302, Baton Rouge, LA 70821-4302 or to fax (225) 219-4068 or by e-mail to deidra.johnson@la.gov. The comment period for this Rule ends on the same date as the public hearing. Copies of this proposed regulation can be purchased by contacting the DEQ Public Records Center at (225) 219-3168. Check or money order is required in advance for each copy of AQ340ft. This proposed regulation is available on the internet at www.deq.louisiana.gov/portal/tabid/1669/default.aspx.

Public Hearing

A public hearing will be held on March 27, 2013, at 1:30 p.m. in the Galvez Building, Oliver Pollock Conference Room, 602 North Fifth Street, Baton Rouge, LA 70802. Interested persons are invited to attend and submit oral comments on the proposed amendments. Should individuals with a disability need an accommodation in order to participate, contact Deidra Johnson at the address given below or at (225) 219-3985. Two hours of free parking are allowed in the Galvez Garage with a validated parking ticket.

This proposed regulation is available for inspection at the following DEQ office locations from 8 a.m. until 4:30 p.m.: 602 North Fifth Street, Baton Rouge, LA 70802; 1823 Highway 546, West Monroe, LA 71292; State Office Building, 1525 Fairfield Avenue, Shreveport, LA 71101; 1301 Gadwall Street, Lake Charles, LA 70615; 111 New Center Drive, Lafayette, LA 70508; 110 Barataria Street, Lockport, LA 70374; 201 Evans Road, Bldg. 4, Suite 420, New Orleans, LA 70123.

Herman Robinson, CPM
Executive Counsel

1302#026

NOTICE OF INTENT

Office of the Governor
Real Estate Appraisers Board

Real Estate—Appraisal Management Companies
(LAC 46:LXVII.30302, 30401, 30501, 30900, and 31101)

Under the authority of the Louisiana Real Estate Appraisers Law, R.S. 37:3397 et seq., and in accordance with the provisions of the Louisiana Administrative Procedure Act, R.S. 49:950 et seq., notice is hereby given that the Louisiana Real Estate Appraisers Board has initiated procedures to amend Chapters 303, 305 and 309, and to promulgate Chapters 304 and 311. The purpose of the proposed action is to: (1) establish compliance procedures whereby appraisal management company licensees can meet the amended licensing requirements enacted in Act 429 of the 2012 Regular Session consistent with the requirements of the federal Dodd-Frank Wall Street Reform and Consumer Protection Act; (2) establish grievance or complaint procedures; and (3) further clarify investigative procedures.

Title 46
PROFESSIONAL AND OCCUPATIONAL STANDARDS
Part LXVII. Real Estate
Subpart 3. Appraisal Management Companies
Chapter 303. Forms and Applications
§30302. Surety Bond Required; Amount and Conditions; Filing

A. Applicants for licensing as an appraisal management company shall submit proof of a surety bond in the amount of $20,000 with a surety company qualified to conduct business in Louisiana.

B. Bonds shall be in favor of the state of Louisiana and conditioned for the benefit of a claimant against the licensee for a violation of the Appraisal Management Company Licensing and Regulation Act and/or the rules and regulations of the board.

C. Bonds shall remain effective and in force throughout the license period of the appraisal management company.

D. Proof of surety bond renewal shall be provided to the board in conjunction with the annual renewal of the appraisal management company license.

E. Failure to maintain a surety bond shall be cause for revocation or suspension of a license.

F. A licensee who elects to submit a cash deposit or security in lieu of a surety bond, as provided in R.S. 37:3515.3(D)(5), shall restore the cash deposit or security annually upon license renewal, if a claim has reduced the deposit amount or security below $20,000.

G. The board may file suit on behalf of a party having a claim against a licensee or a party having a claim may file suit directly against the surety bond. Suits shall be filed within one year after the claim arises.

AUTHORITY NOTE: Promulgated in accordance with R.S. 37:3415.1 et seq.

HISTORICAL NOTE: Promulgated by the Office of the Governor, Real Estate Appraisers Board, LR 39:

Chapter 304. Competency
§30401. Appraiser License Verification

A. Prior to making an assignment to a real estate fee appraiser, licensees shall have a system in place to verify that the appraiser holds a license in good standing in this state pursuant to the Louisiana Real Estate Appraisers Law, R.S. 37:3391 et seq. Licensees may rely on the National Registry of the Appraisal Subcommittee for purposes of appraiser license verification. Before or at the time of making an assignment to a real estate fee appraiser, licensees shall obtain a written certification from the appraiser that he or she:

1. is competent in the property type of the assignment;
2. is competent in the geographical area of the assignment;
3. has access to appropriate data sources for the assignment;
4. will immediately notify the licensee in writing if the appraiser later determines that he or she is not qualified to complete the assignment; and

5. is aware that misrepresentation of competency is subject to the mandatory reporting requirement of the *Uniform Standards of Professional Appraisal Practice (USPAP)*.

B. Subsequent to a completed appraisal being submitted to the assigning licensee, any request for additional information that may impact or alter the opinion of value stated therein shall be made by the certified appraiser completing the appraisal review.

AUTHORITY NOTE: Promulgated in accordance with R.S. 37:3415.1 et seq.

HISTORICAL NOTE: Promulgated by the Office of the Governor, Real Estate Appraisers Board, LR 39:

Chapter 305. Responsibilities and Duties

§30501. Record Keeping

A. - A.4. …

B. In addition to the records that shall be maintained in Subsection A of this Section, licensees shall maintain a complete list of all real estate fee appraisers approved by the licensee to receive appraisal assignments. The list shall include, but is not limited to, the following information on each fee appraiser:

1. name, license status, and qualifications;

2. errors and omission insurance status, including the carrier, the policy number, the dollar limits of the coverage and the dates covered in the policy, if such insurance is required by the licensee;

3. experience and professional record;

4. the areas in which each fee appraiser considers him/herself geographically competent broken down by parish and/or zip code;

5. the type of property for each appraisal performed;

6. the scope of work for each appraisal performed;

7. the time frame in which the appraisal services are required to be performed;

8. fee appraiser work quality;

9. the number and type of assignments completed per year; and

10. the fee or remuneration or monitory compensation for each report or assignment.

C. All records shall be kept properly indexed and readily available to the board for review upon request. Duly authorized representatives of the board shall be authorized to inspect such records at the offices of licensees between the hours of 9 a.m. and 4 p.m., Saturdays, Sundays, and legal holidays excluded, upon 10 calendar days written notice to the licensee, and to subpoena any of the said records.

D. All records specified in this Chapter shall be retained for a period of five years; however, records that are used in a judicial proceeding, in which the appraiser provided testimony related to the appraisal assignment, shall be retained for at least two years after disposition, whichever period expires last.

E. At any time that a document or information on file with the board becomes inaccurate or incomplete, the appraisal management company shall notify the board in writing within 10 business days.

AUTHORITY NOTE: Promulgated in accordance with R.S. 37:3415.1 et seq.

HISTORICAL NOTE: Promulgated by the Office of the Governor, Real Estate Appraisers Board, LR 37:2407 (August 2011), amended LR 39:

Chapter 309. Investigations; Disciplinary Authority; Enforcement and Hearing

§30900. Investigations

A. The board may, upon its own motion, and shall, upon the verified complaint in writing of any person, investigate the actions of a licensee or certificate holder, or any person who assumes to act as such. Written complaints shall bear the signature of the complainant or that of his legal representative before any action will be taken thereon by the board.

B. The executive director of the board may issue written authorization to investigate apparent violations of the Louisiana Appraisal Management Company Licensing and Regulation Act and/or the rules and regulations of the board.

C. Investigations shall be conducted by the staff of the Louisiana Real Estate Appraisers Board and/or the Louisiana Real Estate Commission.

D. If, during the course of an investigation, information is established indicating that violations of the Louisiana Appraisal Management Company Licensing and Regulation Act and/or the rules and regulations of the board have been committed by any licensee other than the licensee against whom the original complaint was made, the additional licensee may be added as a respondent to the investigation in the absence of any written complaint alleging such violations.

E. The board may file suit in the Nineteenth Judicial District Court in the parish of East Baton Rouge to enforce a subpoena against any person that does not comply with a subpoena issued by the board.

AUTHORITY NOTE: Promulgated in accordance with R.S. 37:3415.1 et seq.

HISTORICAL NOTE: Promulgated by the Office of the Governor, Real Estate Appraisers Board, LR 39:

Chapter 311. Compensation of Fee Appraisers

§31101. General Provisions; Customary and Reasonable Fees; Presumptions Of Compliance

A. Licensees may use the elements found in the presumptions of compliance prescribed by the Dodd-Frank Wall Street Reform and Consumer Protection Act, and as prescribed by R.S. 37:3515(A) to determine the customary and reasonable rate of compensation for a fee appraiser in a specific geographic market. The disclosure made by licensees using the first presumption of compliance shall provide documentation to the selected fee appraiser that substantiates the method used, the basis for, and the details of the elements listed in Paragraphs B.1-6 of this Section.

1. Licensees shall disclose to the selected fee appraiser all methods, factors, variations, and differences used to determine the customary and reasonable rate of compensation in the geographic market of the property being appraised before or at the time an appraisal assignment is made.

2. An agreement between a licensee and a fee appraiser, written or otherwise, shall not create a presumption of compliance, nor shall it satisfy the requirements of R.S. 37:3415.15, which mandate the payment of a customary and reasonable rate of compensation to fee appraisers.

B. A licensee shall maintain written documentation that describes or substantiates all methods, factors, variations, and differences used to determine the customary and

reasonable fee for appraisal services conducted in the geographic market of the appraisal assignment. This documentation shall include, at a minimum, the following elements:

1. the type of property for each appraisal performed;
2. the scope of work for each appraisal performed;
3. the time in which the appraisal services are required to be performed;
4. fee appraiser qualifications;
5. fee appraiser experience and professional record; and
6. fee appraiser work quality.

C. A licensee may establish a customary and reasonable rate of compensation based on objective third-party information prepared by independent third parties such as government agencies, academic institutions, and private research firms. Third-party information shall be based on recent rates paid to a representative sample of appraisal service providers in the geographic market of the appraisal assignment, or the fee schedule of those providers. Written documentation that describes and substantiates third-party information shall be maintained by the licensee.

1. The board, at its discretion, may establish a customary and reasonable rate of compensation schedule for use by any licensees that elects to do so.

D. In accordance with the record keeping responsibilities prescribed in Chapter 305 of the board rules and regulations, licensees shall maintain records on all methods, factors, variations, and differences used to determine a customary and reasonable rate of compensation. Licensees shall submit these records to the board upon request no later than 10 calendar days after the request is made.

E. An appraiser who is aggrieved under this Section may file a complaint with the board against the appraisal management company if the matter remains unresolved after the appraiser completes the company's dispute resolution process.

AUTHORITY NOTE: Promulgated in accordance with R.S. 37:3415.1 et seq.

HISTORICAL NOTE: Promulgated by the Office of the Governor, Real Estate Appraisers Board, LR 39:

Family Impact Statement

The proposed rules have no known impact on family, formation, stability, or autonomy as described in R.S. 49:972.

Poverty Impact Statement

The proposed rules have no known impact on poverty as described in R.S. 49:973.

Public Comments

Interested parties are invited to submit written comments on the proposed regulations through March 12, 2013 at 4:30 p.m., to Stephanie Boudreaux, Louisiana Real Estate Commission, P.O. Box 14785, Baton Rouge, LA 70898-4785 or 9071 Interline Avenue, Baton Rouge, LA 70809.

Bruce Unangst
Executive Director

FISCAL AND ECONOMIC IMPACT STATEMENT FOR ADMINISTRATIVE RULES
RULE TITLE: Real Estate—Appraisal Management Companies

I. ESTIMATED IMPLEMENTATION COSTS (SAVINGS) TO STATE OR LOCAL GOVERNMENT UNITS (Summary)

There are no implementation costs (savings) to state or local governmental units as a result of the proposed rule change. The purpose of the proposed rule change is to establish compliance procedures whereby appraisal management company licensees can meet the amended licensing requirements enacted in Act 429 of the 2012 Regular Legislative Session consistent with the requirements of the federal Dodd-Frank Wall Street Reform and Consumer Protection Act, to establish grievance/complaint procedures, and to further clarify investigative procedures.

II. ESTIMATED EFFECT ON REVENUE COLLECTIONS OF STATE OR LOCAL GOVERNMENTAL UNITS (Summary)

There is no estimated effect on revenue collections of state or local governmental units as a result of the proposed rule change.

III. ESTIMATED COSTS AND/OR ECONOMIC BENEFITS TO DIRECTLY AFFECTED PERSONS OR NONGOVERNMENTAL GROUPS (Summary)

Any cost associated with meeting the surety bond requirement of Act 429 will be determined by the Appraisal Management Company, depending on the independent decision to either purchase a bond, the cost of which will be determined by the bonding company, or to submit a $20,000 cash deposit or security in lieu of the bond. The purpose of the bond, deposit, or security is to ensure that the Appraisal Management Company conducts business in accordance with all license laws and rules, which provides the benefit of protection to the customer.

IV. ESTIMATED EFFECT ON COMPETITION AND EMPLOYMENT (Summary)

There is no estimated impact on competition and employment as a result of the proposed rule change.

Bruce Unangst
Executive Director
1302#006

Evan Brasseaux
Staff Director
Legislative Fiscal Office

NOTICE OF INTENT

Department of Health and Hospitals
Board of Dentistry

Reuse of Toothbrush; Continuing Education Requirements; Examination of Dentists
(LAC 46:XXXIII.305, 1611, and 1709)

In accordance with the applicable provisions of the Administrative Procedure Act, R.S. 49:950 et seq., the Dental Practice Act, R.S. 37:751 et seq., and particularly R.S. 37:760(8), notice is hereby given that the Department of Health and Hospitals, Board of Dentistry intends to repeal LAC 46:XXXIII.305 and amend LAC 46:XXXIII.1611 and 1709.

The Louisiana State Board of Dentistry is repealing §305. The prohibition set forth in §305 is encompassed in other

sections of the Dental Practice Act and is therefore redundant. Next, the board is seeking to define the specific number of hours a licensed dentist will receive for completing the pediatric life support (PALS) course and the recertification course (§1611). In addition, the board is limiting the number of cardiopulmonary courses for which a dentist may receive credit toward his required continuing education requirements for relicensure (§1611). Finally, the board is eliminating the requirement of the successful completion of the national board examination within 10 years of the submission of the application for licensure (§1709). The board will continue to require the successful completion of the examination as a condition precedent to licensure (§1709).

Title 46
PROFESSIONAL AND OCCUPATIONAL STANDARDS

Part XXXIII. Dental Health Profession

Chapter 3. Dentists

§305. Reuse of Toothbrush in Dental Office Prohibited

Repealed.

AUTHORITY NOTE: Promulgated in accordance with R.S. 37:760(8).

HISTORICAL NOTE: Promulgated by the Department of Health and Human Resources, Board of Dentistry, LR 13:180 (March 1987), repealed LR 39:

Chapter 16. Continuing Education Requirements

§1611. Continuing Education Requirements for Relicensure of Dentists

A. - H. …

I.1. Dentists who successfully complete certification courses in advanced cardiac life support continuing education will be awarded up to 16 hours of clinical continuing dental education. However, dentists completing the shorter recertification course in advanced cardiac life support will be awarded 3 hours of clinical continuing dental education.

2. Dentists who successfully complete the certification courses in pediatric advanced cardiac life support continuing education will be awarded up to 14 hours of clinical continuing dental education. However, dentists completing the shorter recertification course in PALS will be awarded 6 hours of clinical continuing dental education.

3. Only one cardiopulmonary resuscitation course per renewal period may be counted toward the continuing education requirement.

J. - L. …

AUTHORITY NOTE: Promulgated in accordance with R.S. 37:760(8) and (13).

HISTORICAL NOTE: Promulgated by the Department of Health and Hospitals, Board of Dentistry, LR 20:661 (June 1994), amended LR 21:569 (June 1995), LR 22:24 (January 1996), LR 22:1216 (December 1996), LR 23:1526 (November 1997), LR 24:1117 (June 1998), LR 25:510 (March 1999), LR 26:489 (March 2000), LR 30:2307 (October 2004), LR 32:244 (February 2006), LR 35:1237 (July 2009), LR 36:2038 (September 2010), LR 37:2151 (July 2011), LR 37:3515 (December 2011), repromulgated LR 38:356 (February 2012), amended LR 38:817 (March 2012), LR 38:1959 (August 2012), LR 39:

Chapter 17. Licensure Examinations

§1709. Examination of Dentists

A. …

B. An applicant shall be entitled to take the examinations required in this Section to practice dentistry in this state if such applicant:

1. - 3. …

4. has successfully completed the National Board of Dental Examiners dental examination.

C. - G. …

AUTHORITY NOTE: Promulgated in accordance with R.S. 37:760(1) and (8).

HISTORICAL NOTE: Promulgated by the Department of Health and Hospitals, Board of Dentistry, LR 24:1119 (June 1998), amended LR 28:2513 (December 2002), LR 33:2654 (December 2007), LR 37:1407 (May 2011), LR 37:2151 (July 2011), LR 37:3516 (December 2011), repromulgated LR 38:356 (February 2012), amended LR 38:1959 (August 2012), LR 39:

Family Impact Statement

There will be no family impact in regard to issues set forth in R.S. 49:972.

Poverty Impact Statement

The proposed rulemaking will have no impact on poverty as described in R.S. 49:973.

Public Comments

Interested persons may submit written comments on these proposed Rule changes to Peyton B. Burkhalter, Executive Director, Louisiana State Board of Dentistry, One Canal Place, Suite 2680, 365 Canal Street, New Orleans, LA 70130. Written comments must be submitted to and received by the board within 20 days of the date of the publication of this notice.

Public Hearing

A request, pursuant to R.S. 49:953(A)(2), for oral presentation, argument, or public hearing must be made in writing and received by the board within 20 days of the date of the publication of this notice.

Peyton B. Burkhalter
Executive Director

FISCAL AND ECONOMIC IMPACT STATEMENT FOR ADMINISTRATIVE RULES
RULE TITLE: Reuse of Toothbrush; Continuing Education Requirements; Examination of Dentists

I. ESTIMATED IMPLEMENTATION COSTS (SAVINGS) TO STATE OR LOCAL GOVERNMENT UNITS (Summary)

There will be a one-time cost of $500 in FY 13 for publication of the proposed rules in the State Register. There are no estimated costs or savings to local governmental units from the proposed rules.

II. ESTIMATED EFFECT ON REVENUE COLLECTIONS OF STATE OR LOCAL GOVERNMENTAL UNITS (Summary)

There will be no effect on revenue collections by the board.

III. ESTIMATED COSTS AND/OR ECONOMIC BENEFITS TO DIRECTLY AFFECTED PERSONS OR NONGOVERNMENTAL GROUPS (Summary)

The Louisiana State Board of Dentistry's current continuing education requirements already grant up to 14 hours to dentists of clinical continuing education credits for the

Pediatric Life Support (PALS) Course and grants up to 6 hours for the shorter recertification course in PALS. In addition, the Board already grants one cardiopulmonary resuscitation course per renewal period toward a dentists continuing education credits. Therefore, these rule changes will not have any economic impact on the licensees and/or the licensees will not incur additional costs. The changes codify prior board policy in this rule.

Dentists applying for licensure by examination who have not taken the National Board Examination within ten years of their application will get an economic advantage because they will not be required to take the National Board Examination as a condition precedent to licensure.

IV. ESTIMATED EFFECT ON COMPETITION AND EMPLOYMENT (Summary)

There is no estimated effect on competition and employment.

Peyton Burkhalter
Executive Director
1302#015

John D. Carpenter
Legislative Fiscal Officer
Legislative Fiscal Office

NOTICE OF INTENT

Department of Health and Hospitals
Bureau of Health Services Financing

Laboratory and Radiology Services
Reimbursement Rate Reduction
(LAC 50:XIX.4329 and 4334-4337)

The Department of Health and Hospitals, Bureau of Health Services Financing proposes to amend LAC 50:XIX.4329 and §§4334-4337 in the Medical Assistance Program as authorized by R.S. 36:254 and pursuant to Title XIX of the Social Security Act. This proposed Rule is promulgated in accordance with the provisions of the Administrative Procedure Act, R.S. 49:950 et seq.

As a result of a budgetary shortfall in state fiscal year 2011, the Department of Health and Hospitals, Bureau of Health Services Financing amended the provisions governing the reimbursement methodology for laboratory and radiology services to reduce the reimbursement rates (*Louisiana Register*, Volume 37, Number 10).

Due to a budgetary shortfall in state fiscal year 2013, the department promulgated an Emergency Rule which amended the provisions governing the reimbursement methodology for laboratory and radiology services to reduce the reimbursement rates (*Louisiana Register*, Volume 38, Number 7). This proposed Rule is being promulgated to continue the provisions of the July 1, 2012 Emergency Rule.

Title 50
PUBLIC HEALTH—MEDICAL ASSISTANCE
Part XIX. Other Services
Subpart 3. Laboratory and X-Ray
Chapter 43. Billing and Reimbursement

§4329. Laboratory Services (Physicians and Independent Laboratories)

A. - J. ...

K. Effective for dates of service on or after July 1, 2012, the reimbursement rates for laboratory services shall be reduced by 3.7 percent of the fee amounts on file as of June 30, 2012.

L. - L.3.a. …

AUTHORITY NOTE: Promulgated in accordance with R.S. 46:153, R.S. 49:1008(A), P.L. 98-369, and Title XIX of the Social Security Act.

HISTORICAL NOTE: Promulgated by the Department of Health and Hospitals, Office of the Secretary, Bureau of Health Services Financing, LR 28:1025 (May 2002), amended by the Department of Health and Hospitals, Bureau of Health Services Financing, LR 35:1897 (September 2009), LR 36:1248 (June 2010), LR 36:2563 (November 2010), LR 37:3028 (October 2011), LR 39:95 (January 2013), LR 39:

§4334. Radiology Services

A. - I. ...

J. Effective for dates of service on or after July 1, 2012, the reimbursement rates for radiology services shall be reduced by 3.7 percent of the fee amounts on file as of June 30, 2012.

AUTHORITY NOTE: Promulgated in accordance with R.S. 36:254 and Title XIX of the Social Security Act.

HISTORICAL NOTE: Promulgated by the Department of Health and Hospitals, Bureau of Health Services Financing, LR 35:1897 (September 2009), amended LR 36:1248 (June 2010), LR 36:2563 (November 2010), LR 37:3029 (October 2011), LR 39:

§4335. Portable Radiology Services

A. - G. …

H. Effective for dates of service on or after July 1, 2012, the reimbursement rates for portable radiology services shall be reduced by 3.7 percent of the fee amounts on file as of June 30, 2012.

AUTHORITY NOTE: Promulgated in accordance with R.S. 36:254 and Title XIX of the Social Security Act.

HISTORICAL NOTE: Promulgated by the Department of Health and Hospitals, Office of the Secretary, Bureau of Health Services Financing, LR 30:1026 (May 2004), amended by the Department of Health and Hospitals, Bureau of Health Services Financing, LR 35:1898 (September 2009), LR 36:1248 (June 2010), LR 36:2563 (November 2010), LR 37:3029 (October 2011), LR 39:

§4337. Radiation Therapy Centers

A. - G. ...

H. Effective for dates of service on or after July 1, 2012, the reimbursement rates for radiology services provided by radiation therapy centers shall be reduced by 3.7 percent of the fee amounts on file as of June 30, 2012.

AUTHORITY NOTE: Promulgated in accordance with R.S. 36:254 and Title XIX of the Social Security Act.

HISTORICAL NOTE: Promulgated by the Department of Health and Hospitals, Bureau of Health Services Financing, LR 35:1898 (September 2009), amended LR 36:1248 (June 2010), LR 36:2563 (November 2010), LR 37:3029 (October 2011), LR 39:

Implementation of the provisions of this Rule may be contingent upon the approval of the U.S. Department of Health and Human Services, Centers for Medicare and Medicaid Services (CMS), if it is determined that submission to CMS for review and approval is required.

Family Impact Statement

In compliance with Act 1183 of the 1999 Regular Session of the Louisiana Legislature, the impact of this proposed Rule on the family has been considered. It is anticipated that this proposed Rule may have an adverse impact on family functioning, stability and autonomy as described in R.S. 49:972 in the event that provider participation in the Medicaid Program is diminished as a result of reduced reimbursement rates.

Poverty Impact Statement

In compliance with Act 854 of the 2012 Regular Session of the Louisiana Legislature, the poverty impact of this proposed Rule has been considered. It is anticipated that this proposed Rule may have an adverse impact on child, individual, or family poverty in relation to individual or community asset development as described in R.S. 49:973 in the event that health care assistance is reduced as a result of diminished provider participation.

Public Comments

Interested persons may submit written comments to J. Ruth Kennedy, Bureau of Health Services Financing, P.O. Box 91030, Baton Rouge, LA 70821-9030. She is responsible for responding to inquiries regarding this proposed Rule.

Public Hearing

A public hearing on this proposed Rule is scheduled for Wednesday, March 27, 2013 at 9:30 a.m. in Room 118, Bienville Building, 628 North Fourth Street, Baton Rouge, LA. At that time all interested persons will be afforded an opportunity to submit data, views or arguments either orally or in writing. The deadline for receipt of all written comments is 4:30 p.m. on the next business day following the public hearing.

Bruce D. Greenstein
Secretary

FISCAL AND ECONOMIC IMPACT STATEMENT FOR ADMINISTRATIVE RULES
RULE TITLE: Laboratory and Radiology Services—Reimbursement Rate Reduction

I. ESTIMATED IMPLEMENTATION COSTS (SAVINGS) TO STATE OR LOCAL GOVERNMENT UNITS (Summary)

It is anticipated that the implementation of this proposed Rule will result in estimated state general fund programmatic savings of $456,150 for FY 12-13, $520,960 for FY 13-14 and $565,273 for FY 14-15. It is anticipated that $410 ($205 SGF and $205 FED) will be expended in FY 12-13 for the state's administrative expense for promulgation of this proposed Rule and the final Rule. The numbers reflected above are based on a blended Federal Medical Assistance Percentage (FMAP) rate of 62.96 percent in FY 13-14. The enhanced rate of 62.11 percent for the last nine months of FY 14 is the federal rate for disaster-recovery FMAP adjustment states.

II. ESTIMATED EFFECT ON REVENUE COLLECTIONS OF STATE OR LOCAL GOVERNMENTAL UNITS (Summary)

It is anticipated that the implementation of this proposed Rule will reduce federal revenue collections by approximately $908,954 for FY 12-13, $885,519 for FY 13-14 and $883,401 for FY 14-15. It is anticipated that $205 will be expended in FY 12-13 for the federal administrative expenses for promulgation of this proposed rule and the final rule. The numbers reflected above are based on a blended Federal Medical Assistance Percentage (FMAP) rate of 62.96 percent in FY 13-14. The enhanced rate of 62.11 percent for the last nine months of FY 14 is the federal rate for disaster-recovery FMAP adjustment states.

III. ESTIMATED COSTS AND/OR ECONOMIC BENEFITS TO DIRECTLY AFFECTED PERSONS OR NONGOVERNMENTAL GROUPS (Summary)

This proposed Rule continues the provisions of the July 1, 2012 emergency Rule which amended the provisions governing the reimbursement methodology for laboratory and radiology services to reduce the reimbursement rates. It is anticipated that implementation of this proposed Rule will reduce programmatic expenditures in the Medicaid Program by approximately $1,365,514 for FY 12-13, $1,406,479 for FY 13-14 and $1,448,674 for FY 14-15.

IV. ESTIMATED EFFECT ON COMPETITION AND EMPLOYMENT (Summary)

It is anticipated that the implementation of this proposed Rule will not have an effect on competition. However, it is anticipated that the implementation of this proposed Rule may have a negative effect on employment as it will reduce the payments made for laboratory and radiology services. The reduction in payments may adversely impact the financial standing of providers and could possibly cause a reduction in employment opportunities.

J. Ruth Kennedy	John D. Carpenter
Medicaid Director	Legislative Fiscal Officer
1302#089	Legislative Fiscal Office

NOTICE OF INTENT

Department of Health and Hospitals
Bureau of Health Services Financing

LaCHIP Affordable Plan
Dental Program
Reimbursement Rate Reduction
(LAC 50:III.20509)

The Department of Health and Hospitals, Bureau of Health Services Financing proposes to adopt LAC 50:III.20509 in the Medical Assistance Program as authorized by R.S. 36:254 and pursuant to Title XIX of the Social Security Act. This proposed Rule is promulgated in accordance with the provisions of the Administrative Procedure Act, R.S. 49:950 et seq.

The Department of Health and Hospitals, Bureau of Health Services Financing adopted provisions to implement phase five of LaCHIP as a stand-alone program under Title XXI provisions to provide coverage to uninsured children whose family income is from 200 percent up to 250 percent of the FPL (*Louisiana Register*, Volume 34, Number 4).

Due to a budgetary shortfall in state fiscal year 2013, the department promulgated an Emergency Rule which adopted provisions governing the reimbursement methodology for the LaCHIP Affordable Plan Dental Program in order to reduce the reimbursement rates (*Louisiana Register*, Volume 38, Number 7). This proposed Rule is being promulgated to continue the provisions of the July 1, 2012 Emergency Rule.

Title 50
PUBLIC HEALTH—MEDICAL ASSISTANCE
Part III. Eligibility
Subpart 11. State Children's Health Insurance Program
Chapter 205. Louisiana Children's Health Insurance Program (LaCHIP)—Phase V
§20509. Dental Services Reimbursement Methodology

A. Services covered in the LaCHIP Affordable Plan Dental Program shall be reimbursed at the lower of either:

1. the dentist's billed charges minus any third party coverage; or

2. the state's established schedule of fees, which is developed in consultation with the Louisiana Dental Association and the Medicaid dental consultants, minus any third party coverage.

B. Effective for dates of service on or after July 1, 2012, the reimbursement fees for LaCHIP Affordable Plan dental services shall be reduced to the following percentages of the 2009 National Dental Advisory Service comprehensive fee report 70th percentile, unless otherwise stated in this Chapter:

1. 65 percent for the following oral evaluation services:

a. periodic oral examination;

b. oral examination-patients under 3 years of age; and

c. comprehensive oral examination-new patients;

2. 62 percent for the following annual and periodic diagnostic and preventive services:

a. radiographs-periapical, first film;

b. radiographs-periapical, each additional film;

c. radiographs-panoramic film;

d. diagnostic casts;

e. prophylaxis-adult and child;

f. topical application of fluoride, adult and child (prophylaxis not included); and

g. topical fluoride varnish, therapeutic application for moderate to high caries risk patients (under 6 years of age);

3. 45 percent for the following diagnostic and adjunctive general services:

a. oral/facial image;

b. non-intravenous conscious sedation; and

c. hospital call; and

4. 56 percent for the remainder of the dental services.

C. Removable prosthodontics and orthodontic services are excluded from the July 1, 2012 rate reduction.

AUTHORITY NOTE: Promulgated in accordance with R.S. 36:254 and Title XXI of the Social Security Act.

HISTORICAL NOTE: Promulgated by the Department of Health and Hospitals, Bureau of Health Services Financing, LR 39:

Implementation of the provisions of this Rule may be contingent upon the approval of the U.S. Department of Health and Human Services, Centers for Medicare and Medicaid Services (CMS), if it is determined that submission to CMS for review and approval is required.

Family Impact Statement

In compliance with Act 1183 of the 1999 Regular Session of the Louisiana Legislature, the impact of this proposed Rule on the family has been considered. It is anticipated that this proposed Rule may have an adverse impact on family functioning, stability and autonomy as described in R.S. 49:972 in the event that provider participation in the Medicaid Program is diminished as a result of reduced reimbursement rates.

Poverty Impact Statement

In compliance with Act 854 of the 2012 Regular Session of the Louisiana Legislature, the poverty impact of this proposed Rule has been considered. It is anticipated that this proposed Rule may have an adverse impact on child, individual, or family poverty in relation to individual or community asset development as described in R.S. 49:973 in the event that health care assistance is reduced as a result of diminished provider participation.

Public Comments

Interested persons may submit written comments to J. Ruth Kennedy, Bureau of Health Services Financing, P.O. Box 91030, Baton Rouge, LA 70821-9030. She is responsible for responding to inquiries regarding this proposed Rule.

Public Hearing

A public hearing on this proposed Rule is scheduled for Wednesday, March 27, 2013 at 9:30 a.m. in Room 118, Bienville Building, 628 North Fourth Street, Baton Rouge, LA. At that time all interested persons will be afforded an opportunity to submit data, views or arguments either orally or in writing. The deadline for receipt of all written comments is 4:30 p.m. on the next business day following the public hearing.

Bruce D. Greenstein
Secretary

FISCAL AND ECONOMIC IMPACT STATEMENT FOR ADMINISTRATIVE RULES
RULE TITLE: LaCHIP Affordable Plan—Dental Program—Reimbursement Rate Reduction

I. ESTIMATED IMPLEMENTATION COSTS (SAVINGS) TO STATE OR LOCAL GOVERNMENT UNITS (Summary)

It is anticipated that the implementation of this proposed Rule will result in estimated state general fund programmatic savings of $2,575 for FY 12-13, $3,401 for FY 13-14 and $3,689 for FY 14-15. It is anticipated that $410 ($205 SGF and $205 FED) will be expended in FY 12-13 for the state's administrative expense for promulgation of this proposed Rule and the final Rule. The numbers reflected above are based on a blended Federal Medical Assistance Percentage (FMAP) rate of 62.96 percent in FY 13-14. The enhanced rate of 62.11 percent for the last nine months of FY 14 is the federal rate for disaster-recovery FMAP adjustment states.

II. ESTIMATED EFFECT ON REVENUE COLLECTIONS OF STATE OR LOCAL GOVERNMENTAL UNITS (Summary)

It is anticipated that the implementation of this proposed Rule will reduce federal revenue collections by approximately $5,333 for FY 12-13, $5,779 for FY 13-14 and $5,766 for FY 14-15. It is anticipated that $205 will be expended in FY 12-13 for the federal administrative expenses for promulgation of this proposed Rule and the final Rule. The numbers reflected above are based on a blended Federal Medical Assistance Percentage (FMAP) rate of 62.96 percent in FY 13-14. The enhanced rate of 62.11 percent for the last nine months of FY 14 is the federal rate for disaster-recovery FMAP adjustment states.

III. ESTIMATED COSTS AND/OR ECONOMIC BENEFITS TO DIRECTLY AFFECTED PERSONS OR NONGOVERNMENTAL GROUPS (Summary)

This proposed rule continues the provisions of the July 1, 2012 emergency rule which adopted provisions governing the reimbursement methodology for the LaCHIP Affordable Plan Dental Program in order to reduce the reimbursement rates. It is anticipated that implementation of this proposed Rule will reduce programmatic expenditures in the Medicaid Program by approximately $8,318 for FY 12-13, $9,180 for FY 13-14 and $9,455 for FY 14-15.

IV. ESTIMATED EFFECT ON COMPETITION AND EMPLOYMENT (Summary)

It is anticipated that the implementation of this proposed Rule will not have an effect on competition. However, it is

anticipated that the implementation of this proposed Rule may have a negative effect on employment as it will reduce the payments made for LaCHIP Affordable Plan Dental Program services. The reduction in payments may adversely impact the financial standing of providers and could possibly cause a reduction in employment opportunities.

J. Ruth Kennedy	John D. Carpenter
Medicaid Director	Legislative Fiscal Officer
1302#090	Legislative Fiscal Office

NOTICE OF INTENT

Department of Health and Hospitals
Bureau of Health Services Financing

Medical Transportation Program
Emergency Ambulance Services
Reimbursement Rate Reduction
(LAC 50:XXVII.325 and 353)

The Department of Health and Hospitals, Bureau of Health Services Financing proposes to amend LAC 50:XXVII.325 and §353 in the Medical Assistance Program as authorized by R.S. 36:254 and pursuant to Title XIX of the Social Security Act. This proposed Rule is promulgated in accordance with the provisions of the Administrative Procedure Act, R.S. 49:950 et seq.

As a result of a budgetary shortfall in state fiscal year 2011, the Department of Health and Hospitals, Bureau of Health Services Financing amended the provisions governing the reimbursement methodology for emergency medical transportation services to reduce the reimbursement rates (*Louisiana Register*, Volume 37, Number 10).

As a result of a budgetary shortfall in state fiscal year 2013, the department promulgated an Emergency Rule which amended the provisions governing the reimbursement methodology for emergency medical transportation services to reduce the reimbursement rates (*Louisiana Register*, Volume 38, Number 7). This proposed Rule is being promulgated to continue the provisions of the July 1, 2012 Emergency Rule.

Title 50
PUBLIC HEALTH—MEDICAL ASSISTANCE
Part XXVII. Medical Transportation Program
Chapter 3. Emergency Medical Transportation
Subchapter B. Ground Transportation
§325. Reimbursement

A. - H. …

I. Effective for dates of service on or after July 1, 2012, the reimbursement rates for emergency ambulance transportation services shall be reduced by 5.25 percent of the rates on file as of June 30, 2012.

AUTHORITY NOTE: Promulgated in accordance with R.S. 36:254 and Title XIX of the Social Security Act.

HISTORICAL NOTE: Promulgated by the Department of Health and Hospitals, Office of the Secretary, Bureau of Health Services Financing, LR 34:878 (May 2008), amended by the Department of Health and Hospitals, Bureau of Health Services Financing, LR 36:1248 (June 2010), amended LR 36:2564 (November 2010), amended LR 37:3029 (October 2011), LR 39:

Subchapter C. Aircraft Transportation
§353. Reimbursement

A. - F. …

G. Effective for dates of service on or after July 1, 2012, the reimbursement rates for fixed winged and rotor winged emergency air ambulance services shall be reduced by 5.25 percent of the rates on file as of June 30, 2012.

AUTHORITY NOTE: Promulgated in accordance with R.S. 36:254 and Title XIX of the Social Security Act.

HISTORICAL NOTE: Promulgated by the Department of Health and Hospitals, Office of the Secretary, Bureau of Health Services Financing, LR 35:70 (January 2009), amended by the Department of Health and Hospitals, Bureau of Health Services Financing, LR 36:2594 (November 2010), amended LR 37:3029 (October 2011), LR 39:

Implementation of the provisions of this Rule may be contingent upon the approval of the U.S. Department of Health and Human Services, Centers for Medicare and Medicaid Services (CMS), if it is determined that submission to CMS for review and approval is required.

Family Impact Statement

In compliance with Act 1183 of the 1999 Regular Session of the Louisiana Legislature, the impact of this proposed Rule on the family has been considered. It is anticipated that this proposed Rule may have an adverse impact on family functioning, stability and autonomy as described in R.S. 49:972 in the event that provider participation in the Medicaid Program is diminished as a result of reduced reimbursement rates.

Poverty Impact Statement

In compliance with Act 854 of the 2012 Regular Session of the Louisiana Legislature, the poverty impact of this proposed Rule has been considered. It is anticipated that this proposed Rule may have an adverse impact on child, individual, or family poverty in relation to individual or community asset development as described in R.S. 49:973 in the event that health care assistance is reduced as a result of diminished provider participation.

Public Comments

Interested persons may submit written comments to J. Ruth Kennedy, Bureau of Health Services Financing, P.O. Box 91030, Baton Rouge, LA 70821-9030. She is responsible for responding to inquiries regarding this proposed Rule.

Public Hearing

A public hearing on this proposed Rule is scheduled for Wednesday, March 27, 2013 at 9:30 a.m. in Room 118, Bienville Building, 628 North Fourth Street, Baton Rouge, LA. At that time all interested persons will be afforded an opportunity to submit data, views or arguments either orally or in writing. The deadline for receipt of all written comments is 4:30 p.m. on the next business day following the public hearing.

Bruce D. Greenstein
Secretary

FISCAL AND ECONOMIC IMPACT STATEMENT FOR ADMINISTRATIVE RULES
RULE TITLE: Medical Transportation Program Emergency Ambulance Services Reimbursement Rate Reduction

I. ESTIMATED IMPLEMENTATION COSTS (SAVINGS) TO STATE OR LOCAL GOVERNMENT UNITS (Summary)

It is anticipated that the implementation of this proposed Rule will result in estimated state general fund programmatic savings of $387,561 for FY 12-13, $442,615 for FY 13-14 and $480,263 for FY 14-15. It is anticipated that $328 ($164 SGF and $164 FED) will be expended in FY 12-13 for the state's administrative expense for promulgation of this proposed Rule and the final Rule. The numbers reflected above are based on a blended Federal Medical Assistance Percentage (FMAP) rate of 62.96 percent in FY 13-14. The enhanced rate of 62.11 percent for the last nine months of FY 14 is the federal rate for disaster-recovery FMAP adjustment states.

II. ESTIMATED EFFECT ON REVENUE COLLECTIONS OF STATE OR LOCAL GOVERNMENTAL UNITS (Summary)

It is anticipated that the implementation of this proposed Rule will reduce federal revenue collections by approximately $772,270 for FY 12-13, $752,349 for FY 13-14 and $750,550 for FY 14-15. It is anticipated that $164 will be expended in FY 12-13 for the federal administrative expenses for promulgation of this proposed rule and the final Rule. The numbers reflected above are based on a blended Federal Medical Assistance Percentage (FMAP) rate of 62.96 percent in FY 13-14. The enhanced rate of 62.11 percent for the last nine months of FY 14 is the federal rate for disaster-recovery FMAP adjustment states.

III. ESTIMATED COSTS AND/OR ECONOMIC BENEFITS TO DIRECTLY AFFECTED PERSONS OR NONGOVERNMENTAL GROUPS (Summary)

This proposed Rule continues the provisions of the July 1, 2012 Rmergency Rule which amended the provisions governing the reimbursement methodology for emergency medical transportation services to reduce the reimbursement rates (approximately 72,000 service units). It is anticipated that implementation of this proposed Rule will reduce programmatic expenditures in the Medicaid Program by approximately $1,160,159 for FY 12-13, $1,194,964 for FY 13-14 and $1,230,813 for FY 14-15.

IV. ESTIMATED EFFECT ON COMPETITION AND EMPLOYMENT (Summary)

It is anticipated that the implementation of this proposed Rule will not have an effect on competition. However, we anticipate that the implementation may have a negative effect on employment as it will reduce the reimbursement rates paid for emergency medical transportation services. The reduction in payments may adversely impact the financial standing of providers and could possibly cause a reduction in employment opportunities.

J. Ruth Kennedy	John D. Carpenter
Medicaid Director	Legislative Fiscal Officer
1302#091	Legislative Fiscal Office

NOTICE OF INTENT

Department of Health and Hospitals
Bureau of Health Services Financing

Nursing Facilities—Per Diem Rate Reduction
(LAC 50:II.20005)

The Department of Health and Hospitals, Bureau of Health Services Financing proposes to amend LAC 50:II.20005 in the Medical Assistance Program as authorized by R.S. 36:254 and pursuant to Title XIX of the Social Security Act. This proposed Rule is promulgated in accordance with the provisions of the Administrative Procedure Act, R.S. 49:950 et seq.

The Department of Health and Hospitals, Bureau of Health Services Financing amended the provisions governing the reimbursement methodology for nursing facilities to reduce the per diem rates paid to non-state nursing facilities in order to remove the rebased amount and sunset the state fiscal year (SFY) 2011-12 nursing facility rate rebasing (*Louisiana Register*, Volume 38, Number 5).

For SFY 2013-14, state general funds will be required to continue nursing facility rates at the rebased level. Because of the fiscal crisis facing the state, the state general funds will not be available to sustain the increased rates. Consequently, the department proposes to amend the provisions governing the reimbursement methodology for nursing facilities to reduce the per diem rates paid to non-state nursing facilities. The effect of the reductions will remove the rebased amount and sunset the SFY 2012-2013 nursing facility rebasing.

Title 50
PUBLIC HEALTH—MEDICAL ASSISTANCE
Part II. Nursing Facilities
Subpart 5. Reimbursement
Chapter 200. Reimbursement Methodology
§20005. Rate Determination
[Formerly LAC 50:VII.1305]

A. - N. …

O. Effective for dates of service on or after July 1, 2013, the per diem rate paid to non-state nursing facilities, excluding the provider fee, shall be reduced by $53.05 of the rate in effect on June 30, 2013 until such time that the rate is rebased.

AUTHORITY NOTE: Promulgated in accordance with R.S. 36:254 and Title XIX of the Social Security Act.

HISTORICAL NOTE: Promulgated by the Department of Health and Hospitals, Office of the Secretary, Bureau of Health Services Financing, LR 28:1791 (August 2002), amended LR 31:1596 (July 2005), LR 32:2263 (December 2006), LR 33:2203 (October 2007), amended by the Department of Health and Hospitals, Bureau of Health Services Financing, LR 36:325 (February 2010), repromulgated LR 36:520 (March 2010), amended LR 36:1556 (July 2010), LR 36:1782 (August 2010), LR 36:2566 (November 2010), LR 37:092 (March 2011), LR 37:1174 (April 2011), LR 37:2631 (September 2011), LR 38:1241 (May 2012), LR 39:

Implementation of the provisions of this Rule may be contingent upon the approval of the U.S. Department of Health and Human Services, Centers for Medicare and Medicaid Services (CMS), if it is determined that submission to CMS for review and approval is required.

Family Impact Statement

In compliance with Act 1183 of the 1999 Regular Session of the Louisiana Legislature, the impact of this proposed Rule on the family has been considered. It is anticipated that this proposed Rule may have an adverse impact on family functioning, stability and autonomy as described in R.S. 49:972 in the event that provider participation in the Medicaid Program is diminished as a result of reduced reimbursement rates.

Poverty Impact Statement

In compliance with Act 854 of the 2012 Regular Session of the Louisiana Legislature, the poverty impact of this proposed Rule has been considered. It is anticipated that this proposed Rule may have an adverse impact on child, individual, or family poverty in relation to individual or community asset development as described in R.S. 49:973 in the event that health care assistance is reduced as a result of diminished provider participation.

Public Comments

Interested persons may submit written comments to J. Ruth Kennedy, Bureau of Health Services Financing, P.O. Box 91030, Baton Rouge, LA 70821-9030. She is responsible for responding to inquiries regarding this proposed Rule.

Public Hearing

A public hearing on this proposed Rule is scheduled for Wednesday, March 27, 2013 at 9:30 a.m. in Room 118, Bienville Building, 628 North Fourth Street, Baton Rouge, LA. At that time all interested persons will be afforded an opportunity to submit data, views or arguments either orally or in writing. The deadline for receipt of all written comments is 4:30 p.m. on the next business day following the public hearing.

Bruce D. Greenstein
Secretary

FISCAL AND ECONOMIC IMPACT STATEMENT FOR ADMINISTRATIVE RULES
RULE TITLE: Nursing Facilities—Per Diem Rate Reduction

I. ESTIMATED IMPLEMENTATION COSTS (SAVINGS) TO STATE OR LOCAL GOVERNMENT UNITS (Summary)

It is anticipated that the implementation of this proposed Rule will result in estimated programmatic savings to the state of $133,518,886 for FY 13-14 only. There are no ongoing savings due to the rates being rebased again on July 1, 2014. It is anticipated that $328 ($164 SGF and $164 FED) will be expended in FY 12-13 for the state's administrative expense for promulgation of this proposed Rule and the final Rule. The numbers reflected above are based on a blended Federal Medical Assistance Percentage (FMAP) rate of 62.96 percent in FY 13-14. The enhanced rate of 62.11 percent for the last nine months of FY 14 is the federal rate for disaster-recovery FMAP adjustment states.

II. ESTIMATED EFFECT ON REVENUE COLLECTIONS OF STATE OR LOCAL GOVERNMENTAL UNITS (Summary)

It is anticipated that the implementation of this proposed Rule will reduce federal revenue collections by approximately $226,953,269 for FY 13-14 only. There are no ongoing revenue collections due to the rates being rebased again on July 1, 2014. It is anticipated that $164 will be expended in FY 12-13 for the federal administrative expenses for promulgation of this proposed Rule and the final Rule. The numbers reflected above are based on a blended Federal Medical Assistance Percentage (FMAP) rate of 62.96 percent in FY 13-14. The enhanced rate of 62.11 percent for the last nine months of FY 14 is the federal rate for disaster-recovery FMAP adjustment states.

III. ESTIMATED COSTS AND/OR ECONOMIC BENEFITS TO DIRECTLY AFFECTED PERSONS OR NONGOVERNMENTAL GROUPS (Summary)

This proposed Rule amends the provisions governing the reimbursement methodology for nursing facilities to reduce the per diem rates paid to non-state nursing facilities as a means of removing the FY 13 increase as a result of the July 1, 2012 nursing facility rebasing. It is anticipated that implementation of this proposed Rule will reduce program expenditures in the Medicaid Program by approximately $360,472,155 for FY 13-14 only.

IV. ESTIMATED EFFECT ON COMPETITION AND EMPLOYMENT (Summary)

It is anticipated that the implementation of this proposed Rule will not have an effect on competition. However, we anticipate that the implementation may have a negative effect on employment as it will reduce the payments made to nursing facilities. The reduction in payments may adversely impact the financial standing of nursing facilities and could possibly cause a reduction in employment opportunities.

J. Ruth Kennedy	John D. Carpenter
Medicaid Director	Legislative Fiscal Officer
1302#092	Legislative Fiscal Office

NOTICE OF INTENT

Department of Health and Hospitals
Bureau of Health Services Financing

Pediatric Day Health Care Program
Reimbursement Rate Reduction
(LAC 50:XV.28101)

The Department of Health and Hospitals, Bureau of Health Services Financing proposes to amend LAC 50:XV.28101 in the Medical Assistance Program as authorized by R.S. 36:254 and pursuant to Title XIX of the Social Security Act. This proposed Rule is promulgated in accordance with the provisions of the Administrative Procedure Act, R.S. 49:950 et seq.

The Department of Health and Hospitals, Bureau of Health Services Financing adopted provisions to implement pediatric day health care services as an optional covered service in the Medical Assistance Program (*Louisiana Register*, Volume 36, Number 7).

Due to a budgetary shortfall in state fiscal year 2013, the department promulgated an Emergency Rule which amended the provisions governing the reimbursement methodology for pediatric day health care services to reduce the reimbursement rates (*Louisiana Register*, Volume 38,

Number 7). This proposed Rule is being promulgated to continue the provisions of the July 1, 2012 Emergency Rule.

Title 50
PUBLIC HEALTH—MEDICAL ASSISTANCE
Part XV. Services For Special Populations
Subpart 19. Pediatric Day Health Care
Chapter 281. Reimbursement Methodology
§28101. General Provisions

A. - B. ...

C. Effective for dates of service on or after July 1, 2012, the reimbursement for pediatric day health care services shall be reduced by 3.7 percent of the rates in effect on June 30, 2012.

AUTHORITY NOTE: Promulgated in accordance with R.S. 36:254 and Title XIX of the Social Security Act.

HISTORICAL NOTE: Promulgated by the Department of Health and Hospitals, Bureau of Health Services Financing, LR 36:1558 (July 2010), amended LR 39:

Implementation of the provisions of this Rule may be contingent upon the approval of the U.S. Department of Health and Human Services, Centers for Medicare and Medicaid Services (CMS), if it is determined that submission to CMS for review and approval is required.

Family Impact Statement

In compliance with Act 1183 of the 1999 Regular Session of the Louisiana Legislature, the impact of this proposed Rule on the family has been considered. It is anticipated that this proposed Rule may have an adverse impact on family functioning, stability and autonomy as described in R.S. 49:972 in the event that provider participation in the Medicaid Program is diminished as a result of reduced reimbursement rates.

Poverty Impact Statement

In compliance with Act 854 of the 2012 Regular Session of the Louisiana Legislature, the poverty impact of this proposed Rule has been considered. It is anticipated that this proposed Rule may have an adverse impact on child, individual, or family poverty in relation to individual or community asset development as described in R.S. 49:973 in the event that health care assistance is reduced as a result of diminished provider participation.

Public Comments

Interested persons may submit written comments to J. Ruth Kennedy, Bureau of Health Services Financing, P.O. Box 91030, Baton Rouge, LA 70821-9030. She is responsible for responding to inquiries regarding this proposed Rule.

Public Hearing

A public hearing on this proposed Rule is scheduled for Wednesday, March 27, 2013 at 9:30 a.m. in Room 118, Bienville Building, 628 North Fourth Street, Baton Rouge, LA. At that time all interested persons will be afforded an opportunity to submit data, views or arguments either orally or in writing. The deadline for receipt of all written comments is 4:30 p.m. on the next business day following the public hearing.

Bruce D. Greenstein
Secretary

FISCAL AND ECONOMIC IMPACT STATEMENT FOR ADMINISTRATIVE RULES
RULE TITLE: Pediatric Day Health Care Program—Reimbursement Rate Reduction

I. ESTIMATED IMPLEMENTATION COSTS (SAVINGS) TO STATE OR LOCAL GOVERNMENT UNITS (Summary)

It is anticipated that the implementation of this proposed Rule will result in estimated state general fund programmatic savings of $5,482 for FY 12-13, $6,398 for FY 13-14 and $6,942 for FY 14-15. It is anticipated that $246 ($123 SGF and $123 FED) will be expended in FY 12-13 for the state's administrative expense for promulgation of this proposed Rule and the final Rule. The numbers reflected above are based on a blended Federal Medical Assistance Percentage (FMAP) rate of 62.96 percent in FY 13-14. The enhanced rate of 62.11 percent for the last nine months of FY 14 is the federal rate for disaster-recovery FMAP adjustment states.

II. ESTIMATED EFFECT ON REVENUE COLLECTIONS OF STATE OR LOCAL GOVERNMENTAL UNITS (Summary)

It is anticipated that the implementation of this proposed Rule will reduce federal revenue collections by approximately $11,043 for FY 12-13, $10,876 for FY 13-14 and $10,850 for FY 14-15. It is anticipated that $123 will be expended in FY 12-13 for the federal administrative expenses for promulgation of this proposed rule and the final rule. The numbers reflected above are based on a blended Federal Medical Assistance Percentage (FMAP) rate of 62.96 percent in FY 13-14. The enhanced rate of 62.11 percent for the last nine months of FY 14 is the federal rate for disaster-recovery FMAP adjustment states.

III. ESTIMATED COSTS AND/OR ECONOMIC BENEFITS TO DIRECTLY AFFECTED PERSONS OR NONGOVERNMENTAL GROUPS (Summary)

This proposed Rule continues the provisions of the July 1, 2012 Emergency Rule which amended the provisions governing the reimbursement methodology for pediatric day health care services to reduce the reimbursement rates. It is anticipated that implementation of this proposed Rule will reduce programmatic expenditures in the Medicaid Program by approximately $16,771 for FY 12-13, $17,274 for FY 13-14 and $17,792 for FY 14-15.

IV. ESTIMATED EFFECT ON COMPETITION AND EMPLOYMENT (Summary)

It is anticipated that the implementation of this proposed Rule will not have an effect on competition. However, it is anticipated that the implementation of this proposed Rule may have a negative effect on employment as it will reduce the payments made for pediatric day health care services. The reduction in payments may adversely impact the financial standing of providers and could possibly cause a reduction in employment opportunities.

J. Ruth Kennedy
Medicaid Director
1302#093

John D. Carpenter
Legislative Fiscal Officer
Legislative Fiscal Office

NOTICE OF INTENT

Department of Health and Hospitals
Bureau of Health Services Financing
and
Office of Aging and Adult Services

Personal Care Services—Long Term
Reimbursement Rate Reduction
(LAC 50:XV.12917)

The Department of Health and Hospitals, Bureau of Health Services Financing and the Office of Aging and Adult Services propose to amend LAC 50:XV.12917 in the Medical Assistance Program as authorized by R.S. 36:254 and pursuant to Title XIX of the Social Security Act. This proposed Rule is promulgated in accordance with the provisions of the Administrative Procedure Act, R.S. 49:950 et seq.

Due to a continuing budgetary shortfall, the Department of Health and Hospitals, Bureau of Health Services Financing and the Office of Aging and Adult Services amended the provisions governing the reimbursement methodology for long-term personal care services to reduce the reimbursement rates (*Louisiana Register*, Volume 37, Number 11).

As a result of a budgetary shortfall in state fiscal year 2013, the department promulgated an Emergency Rule which amended the provisions governing the reimbursement methodology for long-term personal care services to reduce the reimbursement rates (*Louisiana Register*, Volume 38, Number 7). This proposed Rule is being promulgated to continue the provisions of the July 1, 2012 Emergency Rule.

Title 50
PUBLIC HEALTH—MEDICAL ASSISTANCE
Part XV. Services for Special Populations
Subpart 9. Personal Care Services
Chapter 129. Long-Term Care
§12917. Reimbursement Methodology

A. - H.2....

I. Effective for dates of service on or after July 1, 2012, the reimbursement rate for long-term personal care services furnished to one participant shall be reduced by 1.5 percent of the rate on file as of June 30, 2012.

AUTHORITY NOTE: Promulgated in accordance with R.S. 36:254 and Title XIX of the Social Security Act.

HISTORICAL NOTE: Promulgated by the Department of Health and Hospitals, Office of the Secretary, Bureau of Health Services Financing, LR 29:913 (June 2003), amended by the Department of Health and Hospitals, Office of Aging and Adult Services, LR 34:253 (February 2008), LR 34:2581 (December 2008), amended by the Department of Health and Hospitals, Bureau of Health Services Financing and the Office of Aging and Adult Services, LR 35:1901 (September 2009), LR 36:1251 (June 2010), LR 37:3267 (November 2011), LR 39:

Implementation of the provisions of this Rule may be contingent upon the approval of the U.S. Department of Health and Human Services, Centers for Medicare and Medicaid Services (CMS), if it is determined that submission to CMS for review and approval is required.

Family Impact Statement

In compliance with Act 1183 of the 1999 Regular Session of the Louisiana Legislature, the impact of this proposed Rule on the family has been considered. It is anticipated that this proposed Rule may have an adverse impact on family functioning, stability and autonomy as described in R.S. 49:972 in the event that provider participation in the Medicaid Program is diminished as a result of reduced reimbursement rates.

Poverty Impact Statement

In compliance with Act 854 of the 2012 Regular Session of the Louisiana Legislature, the poverty impact of this proposed Rule has been considered. It is anticipated that this proposed Rule may have an adverse impact on child, individual, or family poverty in relation to individual or community asset development as described in R.S. 49:973 in the event that health care assistance is reduced as a result of diminished provider participation.

Public Comments

Interested persons may submit written comments to J. Ruth Kennedy, Bureau of Health Services Financing, P.O. Box 91030, Baton Rouge, LA 70821-9030. She is responsible for responding to inquiries regarding this proposed Rule.

Public Hearing

A public hearing on this proposed Rule is scheduled for Wednesday, March 27, 2013 at 9:30 a.m. in Room 118, Bienville Building, 628 North Fourth Street, Baton Rouge, LA. At that time all interested persons will be afforded an opportunity to submit data, views or arguments either orally or in writing. The deadline for receipt of all written comments is 4:30 p.m. on the next business day following the public hearing.

Bruce D. Greenstein
Secretary

FISCAL AND ECONOMIC IMPACT STATEMENT FOR ADMINISTRATIVE RULES
RULE TITLE: Personal Care Services—Long Term—Reimbursement Rate Reduction

I. ESTIMATED IMPLEMENTATION COSTS (SAVINGS) TO STATE OR LOCAL GOVERNMENT UNITS (Summary)

It is anticipated that the implementation of this proposed Rule will result in estimated state general fund programmatic savings of $1,044,000 for FY 12-13, $1,191,984 for FY 13-14 and $1,293,374 for FY 14-15. It is anticipated that $328 ($164 SGF and $164 FED) will be expended in FY 12-13 for the state's administrative expense for promulgation of this proposed Rule and the final Rule. The numbers reflected above are based on a blended Federal Medical Assistance Percentage (FMAP) rate of 62.96 percent in FY 13-14. The enhanced rate of 62.11 percent for the last nine months of FY 14 is the federal rate for disaster-recovery FMAP adjustment states.

II. ESTIMATED EFFECT ON REVENUE COLLECTIONS OF STATE OR LOCAL GOVERNMENTAL UNITS (Summary)

It is anticipated that the implementation of this proposed Rule will reduce federal revenue collections by approximately $2,080,041 for FY 12-13, $2,026,116 for FY 13-14 and $2,021,269 for FY 14-15. It is anticipated that $164 will be expended in FY 12-13 for the federal administrative expenses for promulgation of this proposed Rule and the final Rule. The numbers reflected above are based on a blended Federal Medical Assistance Percentage (FMAP) rate of 62.96 percent in FY 13-14. The enhanced rate of 62.11 percent for the last nine months of FY 14 is the federal rate for disaster-recovery FMAP adjustment states.

III. ESTIMATED COSTS AND/OR ECONOMIC BENEFITS TO DIRECTLY AFFECTED PERSONS OR NONGOVERNMENTAL GROUPS (Summary)

This proposed Rule continues the provisions of the July 1, 2012 Emergency Rule which amended the provisions governing the reimbursement methodology for long-term personal care services to reduce the reimbursement rates. It is anticipated that implementation of this proposed Rule will reduce programmatic expenditures in the Medicaid Program by approximately $3,124,369 for FY 12-13, $3,218,100 for FY 13-14 and $3,314,643 for FY 14-15.

IV. ESTIMATED EFFECT ON COMPETITION AND EMPLOYMENT (Summary)

It is anticipated that the implementation of this proposed Rule will not have an effect on competition. However, it is anticipated that the implementation of this proposed Rule may have a negative effect on employment as it will reduce the payments made for long-term personal care services. The reduction in payments may adversely impact the financial standing of providers and could possibly cause a reduction in employment opportunities.

J. Ruth Kennedy	John D. Carpenter
Medicaid Director	Legislative Fiscal Officer
1302#094	Legislative Fiscal Office

NOTICE OF INTENT

Department of Natural Resources
Office of Conservation

Statewide Order No. 29-B—Hydraulic Fracture Stimulation Operations (LAC 43:XIX.118)

The Department of Natural Resources, Office of Conservation proposes to amend LAC 43:XIX.118 in accordance with the provisions of the Administrative Procedure Act, R.S. 49:950 et seq., and pursuant to the power delegated under the laws of the state of Louisiana. The proposed amendment does not substantially change the requirements currently found in LAC 43:XIX.118 but provides for implementation of Act 812 of the 2012 Regular Session requiring operators to report the type and volume of hydraulic fracturing fluid within 20 days after the completion of such operations. This report shall include a list of additives used, including the specific trade name and the supplier of the additive; and list of ingredients contained in the hydraulic fracturing fluid, the associated CAS registry number, and the maximum concentration of each chemical ingredient in percent by mass that is subject to certain federal regulations of the Occupational Safety and Health Administration. In the case that an ingredient is subject to trade secret protection under the criteria cited in 42 USC 11042(a)(2), and specifically enumerated at 42 USC 11042(b), the operator shall provide the contact information of the entity claiming the protection and shall report, at a minimum, the chemical family associated with such ingredient. These requirements do not apply to operations conducted solely for the purpose of sand control or reduction of near wellbore damage.

Title 43
NATURAL RESOURCES
Part XIX. Office of Conservation—General Operations
Subpart 1. Statewide Order No. 29-B
Chapter 1. General Provisions
§118. Hydraulic Fracture Stimulation Operations

A. The provisions of this Section shall apply to all new wells for which an initial drilling permit is issued on or after the effective date of this Section that are stimulated by the application of fluids, which contain proppant such as sand or man-made inert material, with force and/or pressure in order to create artificial fractures in the formation for the purpose of improving the capacity to produce hydrocarbons. The provisions of this Section shall not apply to operations conducted solely for the purposes of sand control or reduction of near wellbore damage.

B. ...

C.1. No later than 20 days following completion of the hydraulic fracture stimulation operation, the operator shall, for purposes of disclosure, report the following information on or with the well history and work resume report (Form WH) in accordance with the requirements of LAC 43:XIX.105:

a. - f. ...

2.a. Notwithstanding Subparagraph d, if the specific identity of a chemical ingredient and the chemical ingredient's associated CAS number are claimed to be trade secret, or have been finally determined to be entitled to protection as a trade secret under the criteria cited in 42 USC 11042(a)(2), and specifically enumerated at 42 USC 11042(b), the entity entitled to make such a claim may withhold the specific identity of the chemical ingredient and the chemical ingredients associated CAS number from the list required by Subparagraph d. If the entity entitled to make such a claim elects to withhold that information, the report must:

2.a.i. - 4. …

5. Any information provided to the department pursuant to the provisions of this Section shall be subject to examination and reproduction as provided by the Public Records Law, R.S. 44:1 et seq., or any other applicable law.

AUTHORITY NOTE: Promulgated in accordance with R.S. 30:4 et seq.

HISTORICAL NOTE: Promulgated by the Department of Natural Resources, Office of Conservation, LR 37:3064 (October 2011), amended LR 37:3064, LR 39:

Family Impact Statement

In accordance with RS 49:972, the following statements are submitted after consideration of the impact of the proposed Rule amendments at LAC 43:XIX.118 on family as defined therein.

1. The proposed Rule amendment will have no effect on the stability of the family.

2. The proposed Rule amendment will have no effect on the authority and rights of parents regarding the education and supervision of their children.

3. The proposed Rule amendment will have no effect on the functioning of the family.

4. The proposed Rule amendment will have no effect on family earnings and family budget.

5. The proposed Rule amendment will have no effect on the behavior and personal responsibility of children.

6. Family or local government are not required to perform any function contained in the proposed Rule amendment.

Poverty Impact Statement

In accordance with R.S. 49:973, the following statements are submitted after consideration of the impact of the proposed Rule amendments at LAC 43:XIX.118 on poverty as defined therein.

1. The proposed Rule amendment will have no effect on household income, assets, and financial security.

2. The proposed Rule amendment will have no effect on early childhood development and preschool through postsecondary education development.

3. The proposed Rule amendment will have no effect on employment and workforce development.

4. The proposed Rule amendment will have no effect on taxes and tax credits.

5. The proposed Rule amendment will have no effect on child and dependent care, housing, health care, nutrition, transportation, and utilities assistance.

Small Business Statement

In accordance with R.S. 49:965.6, the Department of Natural Resources, Office of Conservation has determined that these amendments will have no estimated effect on small businesses.

Public Comments

All interested parties will be afforded the opportunity to submit data, views, or arguments, orally or in writing at the public hearing in accordance with R.S. 49:953. Written comments will be accepted until 4:30 p.m., April 1, 2013, at Office of Conservation, P.O. Box 94275, Baton Rouge, LA, 70804-9275; or Office of Conservation, Executive Division, 617 North Third St., Baton Rouge, LA 70802. All inquiries should be directed to Tyler Gray at the above addresses or by phone to (225) 342-5570. No preamble was prepared.

Public Hearing

The commissioner of conservation will conduct a public hearing at 10 a.m., March 28, 2013, in the LaBelle Room located on the first floor of the LaSalle Building, 617 North Third Street, Baton Rouge, LA.

James H. Welsh
Commissioner

FISCAL AND ECONOMIC IMPACT STATEMENT FOR ADMINISTRATIVE RULES
RULE TITLE: Statewide Order No. 29-B
Hydraulic Fracture Stimulation Operations

I. ESTIMATED IMPLEMENTATION COSTS (SAVINGS) TO STATE OR LOCAL GOVERNMENT UNITS (Summary)

There are no estimated implementation costs or savings to state or local government units as a result of the proposed rule changes. The proposed amendment, which provides for implementation of Act 812 of the 2012 regular legislative session, requires the well operator to report the type and volume of hydraulic fracturing fluid within 20 days after the completion of such operations.

II. ESTIMATED EFFECT ON REVENUE COLLECTIONS OF STATE OR LOCAL GOVERNMENTAL UNITS (Summary)

There is no anticipated effect on revenue collections of state or local government units as a result of this rule change.

III. ESTIMATED COSTS AND/OR ECONOMIC BENEFITS TO DIRECTLY AFFECTED PERSONS OR NONGOVERNMENTAL GROUPS (Summary)

There are no anticipated costs and/or economic benefits to directly affected persons or non-governmental groups as a result of this rule change.

IV. ESTIMATED EFFECT ON COMPETITION AND EMPLOYMENT (Summary)

There is no estimated effect on competition and employment as a result of this rule change.

James H. Welsh	Evan Brasseaux
Commissioner	Staff Director
1302#111	Legislative Fiscal Office

NOTICE OF INTENT

Department of the Treasury
Board of Trustees of the
Municipal Police Employees' Retirement System

Internal Revenue Code Provisions
(LAC 58:XVIII.Chapter 1)

In accordance with R.S. 49:950 et seq. of the Administrative Procedure Act, notice is hereby given that the Board of Trustees of the Municipal Police Employees' Retirement System has approved for advertisement the adoption of Chapter 1 of Part XVIII, included in Title 58, Retirement, of the *Louisiana Administrative Code*. This intended action complies with the statutory law administered by the Board of Trustees of the Municipal Police Employees' Retirement System. The proposed rules are being adopted pursuant to newly enacted R.S. 11:2225(B) (Acts 2012, No. 511), the effective date of enactment of which will be the formal adoption of these rules. Newly enacted R.S. 11:2225(B) provides that rules and regulations be adopted which will assure that the Municipal Police Employees' Retirement System will remain a tax-qualified retirement plan under the United States Internal Revenue Code and the Regulations thereunder. A preamble to this proposed action has not been prepared.

Title 58
RETIREMENT
Part XVIII. Municipal Police Employees' Retirement System
Chapter 1. Internal Revenue Code Provisions
§101. Limitation on Benefits

A. The limitations of this Chapter shall apply in limitation years beginning on or after July 1, 2007, except as otherwise provided herein.

B The annual benefit otherwise payable to a member under the plan at any time shall not exceed the maximum permissible benefit. If the benefit the member would otherwise accrue in a limitation year would produce an annual benefit in excess of the maximum permissible benefit, the benefit shall be limited (or the rate of accrual reduced) to a benefit that does not exceed the maximum permissible benefit.

C. If the member is, or has ever been, a Member in another qualified defined benefit plan (without regard to whether the plan has been terminated) maintained by the employer or a predecessor employer, the sum of the member's annual benefits from all such plans may not exceed the maximum permissible benefit.

D. The application of the provisions of this chapter shall not cause the maximum permissible benefit for any member to be less than the member's accrued benefit under all the defined benefit plans of the employer or a predecessor employer as of the end of the last limitation year beginning before July 1, 2007 under provisions of the plans that were both adopted and in effect before April 5, 2007. The preceding sentence applies only if the provisions of such defined benefit plans that were both adopted and in effect before April 5, 2007 satisfied the applicable requirements of statutory provisions, regulations, and other published guidance relating to Section 415 of the Internal Revenue Code in effect as of the end of the last limitation year beginning before July 1, 2007, as described in Section 1.415(a)-1(g)(4) of the Income Tax Regulations.

E. The limitations of this chapter shall be determined and applied taking into account the rules in Section G.

F. Definitions

Annual Benefit—a benefit that is payable annually in the form of a straight life annuity. Except as provided below, where a benefit is payable in a form other than a straight life annuity, the benefit shall be adjusted to an actuarially equivalent straight life annuity that begins at the same time as such other form of benefit and is payable on the first day of each month, before applying the limitations of this article. For a member who has or will have distributions commencing at more than one annuity starting date, the annual benefit shall be determined as of each such annuity starting date (and shall satisfy the limitations of this chapter as of each such date), actuarially adjusting for past and future distributions of benefits commencing at the other annuity starting dates. For this purpose, the determination of whether a new starting date has occurred shall be made without regard to Section 1.401(a)-20, Q and A 10(d), and with regard to Section 1.415(b)-1(b)(1)(iii)(B) and (C) of the Income Tax Regulations.

a. No actuarial adjustment to the benefit shall be made for:

i. survivor benefits payable to a surviving spouse under a qualified joint and survivor annuity to the extent such benefits would not be payable if the member's benefit were paid in another form;

ii. benefits that are not directly related to retirement benefits (such as a disability benefit, preretirement incidental death benefits, and postretirement medical benefits); or

iii. the inclusion in the form of benefit of an automatic benefit increase feature, provided the form of benefit is not subject to Section 417(e)(3) of the Internal Revenue Code and would otherwise satisfy the limitations of this chapter, and the plan provides that the amount payable under the form of benefit in any limitation year shall not exceed the limits of this chapter applicable at the annuity starting date, as increased in subsequent years pursuant to Section 415(d). For this purpose, an automatic benefit increase feature is included in a form of benefit if the form of benefit provides for automatic, periodic increases to the benefits paid in that form. The determination of the annual benefit shall take into account social security supplements described in Section 411(a)(9) of the Internal Revenue Code and benefits transferred from another defined benefit plan, other than transfers of distributable benefits pursuant Section 1.411(d)-4, Q and A-3(c), of the Income Tax Regulations, but shall disregard benefits attributable to employee contributions or rollover contributions. Effective for distributions in plan years beginning after December 31, 2003, the determination of actuarial equivalence of forms of benefit other than a straight life annuity shall be made in accordance with §§101.F.1.b.or 101.F.1.c.

b. Benefit Forms Not Subject to Section 417(e)(3).

i. The straight life annuity that is actuarially equivalent to the member's form of benefit shall be determined under this Subparagraph F.1.b, if the form of the member's benefit is either:

(a). a non-decreasing annuity (other than a straight life annuity) payable for a period of not less than the life of the member (or, in the case of a qualified pre-retirement survivor annuity, the life of the surviving spouse); or

(b). an annuity that decreases during the life of the member merely because of:

(i). the death of the survivor annuitant (but only if the reduction is not below 50 percent of the benefit payable before the death of the survivor annuitant); or

(ii). the cessation or reduction of Social Security supplements or qualified disability payments [as defined in Section 401(a)(11)].

ii. Limitation years beginning before July 1, 2007. For limitation years beginning before July 1, 2007, the actuarially equivalent straight life annuity is equal to the annual amount of the straight life annuity commencing at the same annuity starting date that has the same actuarial present value as the member's form of benefit computed using whichever of the following produces the greater annual amount:

(a). the interest rate specified in La. R.S. 11:2225(D)(5) and the mortality table (or other tabular factor) specified in La. R.S. 11:2225(D)(5) for adjusting benefits in the same form; and

(b). a 5 percent interest rate assumption and the applicable mortality table for that annuity starting date.

iii. Limitation Years beginning on or after July 1, 2007. For limitation years beginning on or after July 1, 2007, the actuarially equivalent straight life annuity is equal to the greater of:

(a). the annual amount of the straight life annuity (if any) payable to the member under the plan commencing at the same annuity starting date as the member's form of benefit; and

(b). the annual amount of the straight life annuity commencing at the same annuity starting date that has the same actuarial present value as the member's form of benefit, computed using a 5 percent interest rate assumption and the applicable mortality table for that annuity starting date.

c. Benefit Forms Subject to Section 417(e)(3). The straight life annuity that is actuarially equivalent to the member's form of benefit shall be determined under this

paragraph if the form of the member's benefit is other than a benefit form described in §101.F.1.b. In this case, the actuarially equivalent straight life annuity shall be determined as follows.

i. Annuity Starting Date in Plan Years Beginning After 2005. If the annuity starting date of the member's form of benefit is in a plan year beginning after 2005, the actuarially equivalent straight life annuity is equal to the greatest of:

(a). the annual amount of the straight life annuity commencing at the same annuity starting date that has the same actuarial present value as the member's form of computed using the interest rate specified in La. R.S. 11:2225(D)(5) and the mortality table (or other tabular factor) specified in La. R.S. 11:2225(D)(5) for adjusting benefits in the same form; and

(b). the annual amount of the straight life annuity commencing at the same annuity starting date that has the same actuarial present value as the member's form of benefit, computed using a 5.5 percent interest rate assumption and the applicable mortality table; and

(c). the annual amount of the straight life annuity commencing at the same annuity starting date that has the same actuarial present value as the member's form of benefit, computed using the applicable interest rate and the applicable mortality table, divided by 1.05.

ii. Annuity Starting Date in Plan Years Beginning in 2004 or 2005. If the annuity starting date of the member's form of benefit is in a plan year beginning in 2004 or 2005, the actuarially equivalent straight life annuity is equal to the annual amount of the straight life annuity commencing at the same annuity starting date that has the same actuarial present value as the member's form of benefit, computed using whichever of the following produces the greater annual amount:

(a). the interest rate specified in La. R.S. 11:2225(D)(5) and the mortality table (or other tabular factor) specified in La. R.S. 11:2225(D)(5) for adjusting benefits in the same form; and

(b). a 5.5 percent interest rate assumption and the applicable mortality table. If the annuity starting date of the member's benefit is on or after the first day of the first plan year beginning in 2004 and before December 31, 2004, the application of this §101.F.1.c. shall not cause the amount payable under the member's form of benefit to be less than the benefit calculated under the Plan, taking into account the limitations of this chapter, except that the actuarially equivalent straight life annuity is equal to the annual amount of the straight life annuity commencing at the same annuity starting date that has the same actuarial present value as the member's form of benefit, computed using whichever of the following produces the greatest annual amount:

(i). the interest rate specified in La. R.S. 11:2225(D)(5) and the mortality table (or other tabular factor) specified in La. R.S. 11:2225(D)(5) for adjusting benefits in the same form;

(ii). the applicable interest rate and the applicable mortality table; and

(iii). the applicable interest rate (as in effect on the last day of the last plan year beginning before January 1, 2004, under provisions of the plan then adopted and in effect) and the applicable mortality table.

Applicable Interest Rate—the rate of interest on 30 year Treasury securities (or any subsequent rate used under Section 417(e) of the Internal Revenue Code) as specified by the Internal revenue service for the lookback month. The lookback month applicable to the stability period is the second calendar month preceding the first day of the stability period. The stability period is the plan year that contains the annuity starting date for the distribution and for which the applicable interest rate remains constant.

Applicable Mortality Table—the applicable mortality table within the meaning of Section 417(e)(3)(B) of the Internal Revenue Code.

415 Safe-Harbor Compensation—

a. Compensation is defined as wages, salaries, and fees for professional services and other amounts received (without regard to whether or not an amount is paid in cash) for personal services actually rendered in the course of employment with the employer maintaining the plan to the extent that the amounts are includible in gross income (including, but not limited to, commissions paid salespersons, compensation for services on the basis of a percentage of profits, commissions on insurance premiums, tips, bonuses, fringe benefits, and reimbursements, or other expense allowances under a nonaccountable plan (as described in Section 1.62-2(c) of the Income Tax Regulations), and excluding the following:

i. Employer contributions [other than elective contributions described in Section 402(e)(3), Section 408(k)(6), Section 408(p)(2)(A)(i), or Section 457(b)] to a plan of deferred compensation (including a simplified employee pension described in Section 408(k) or a simple retirement account described in Section 408(p), and whether or not qualified) to the extent such contributions are not includible in the member's gross income for the taxable year in which contributed, and any distributions (whether or not includible in gross income when distributed) from a plan of deferred compensation (whether or not qualified);

ii. Amounts realized from the exercise of a nonstatutory stock option (that is, an option other than a statutory stock option as defined in Section 1.421-1(b) of the Income Tax Regulations), or when restricted stock (or property) held by the member either becomes freely transferable or is no longer subject to a substantial risk of forfeiture;

iii. Amounts realized from the sale, exchange or other disposition of stock acquired under a statutory stock option;

iv. Other amounts that receive special tax benefits, such as premiums for group-term life insurance (but only to the extent that the premiums are not includible in the gross income of the member and are not salary reduction amounts that are described in Section 125);

v. Other items of remuneration that are similar to any of the items listed in Clauses i through iv above.

b. For any self-employed individual, compensation shall mean earned income.

c. Except as provided herein, for limitation years beginning after December 31, 1991, compensation for a limitation year is the compensation actually paid or made available during such limitation year.

d. For limitation years beginning on or after July 1, 2007, compensation for a limitation year shall also include

compensation paid by the later of 2 1/2 months after an member's severance from employment with the employer maintaining the plan or the end of the limitation year that includes the date of the member's severance from employment with the employer maintaining the plan, if:

i. the payment is regular compensation for services during the member's regular working hours, or compensation for services outside the employee's regular working hours (such as overtime or shift differential), commissions, bonuses, or other similar payments, and, absent a severance from employment, the payments would have been paid to the member while the member continued in employment with the employer;

ii. the payment is for unused accrued bona fide sick, vacation or other leave that the member would have been able to use if employment had continued; or

iii. the payment is received by the member pursuant to a nonqualified unfunded deferred compensation plan and would have been paid at the same time if employment had continued, but only to the extent includible in gross income.

e. Any payments not described above shall not be considered compensation if paid after severance from employment, even if they are paid by the later of 2 1/2 months after the date of severance from employment or the end of the limitation year that includes the date of severance from employment. Back pay, within the meaning of Section 1.415(c)-2(g)(8), shall be treated as compensation for the limitation year to which the back pay relates to the extent the back pay represents wages and compensation that would otherwise be included under this definition.

f. For limitation years beginning after December 31, 1997, compensation paid or made available during such limitation year shall include amounts that would otherwise be included in compensation but for an election under Sections 125(a), 402(e)(3), 402(h)(1)(B), 402(k), or 457(b).

g. For limitation years beginning after December 31, 2000, compensation shall also include any elective amounts that are not includible in the gross income of the member by reason of Section 132(f)(4).

Defined Benefit Compensation Limitation—100 percent of a member's high three-year average compensation, payable in the form of a straight life annuity. In the case of a member who is rehired after a severance from employment, the defined benefit compensation limitation is the greater of 100 percent of the member's high three-year average compensation, as determined prior to the severance from employment or 100 percent of the member's high three-year average compensation, as determined after the severance from employment under §101.G.

Defined Benefit Dollar Limitation—effective for limitation years ending after December 31, 2001, the defined benefit dollar limitation is $160,000, automatically adjusted under Section 415(d) of the Internal Revenue Code, effective January 1 of each year, as published in the Internal Revenue Bulletin, and payable in the form of a straight life annuity. The new limitation shall apply to limitation years ending with or within the calendar year of the date of the adjustment, but a member's benefits shall not reflect the adjusted limit prior to January 1 of that calendar year.

Employer—for purposes of this chapter, employer shall mean the employer that adopts this plan, and all members of a controlled group of corporations, as defined in Section 414(b) of the Internal Revenue Code, as modified by Section 415(h), all commonly controlled trades or businesses [as defined in Section 414(c), as modified, except in the case of a brother-sister group of trades or businesses under common control, by Section 415(h)], or affiliated service groups [as defined in Section 414(m)] of which the adopting employer is a part, and any other entity required to be aggregated with the employer pursuant to Section 414(o) of the Internal Revenue Code.

Formerly Affiliated Plan of the Employer—a plan that, immediately prior to the cessation of affiliation, was actually maintained by the employer and, immediately after the cessation of affiliation is not actually maintained by the employer. For this purpose, cessation of affiliation means the event that causes an entity to no longer be considered the employer, such as the sale of a member controlled group of corporations, as defined in Section 414(b) of the Internal Revenue Code, as modified by Section 415(h), to an unrelated corporation, or that causes a plan to not actually be maintained by the employer, such as transfer of plan sponsorship outside a controlled group.

High Three-Year Average Compensation—the average compensation for the three consecutive years of service (or, if the member has less than three consecutive years of service, the member's longest consecutive period of service, including fractions of years, but not less than one year) with the employer that produces the highest average. In the case of a member who is rehired by the employer after a severance from employment, the member's high three-year average compensation shall be calculated by excluding all years for which the member performs no services for and receives no compensation from the employer (the break period) and by treating the years immediately preceding and following the break period as consecutive. A member's compensation for a year of service shall not include compensation in excess of the limitation under Section 401(a)(17) of the Internal Revenue Code that is in effect for the calendar year in which such year of service begins.

Limitation Year—a fiscal year, from July 1 to June 31. All qualified plans maintained by the employer must use the same limitation year. If the limitation year is amended to a different 12-consecutive month period, the new limitation year must begin on a date within the limitation year in which the amendment is made.

Maximum Permissible Benefit—the lesser of the defined benefit dollar limitation or the defined benefit compensation limitation (both adjusted where required, as provided below).

a. Adjustment for Less than 10 Years of Participation or Service. If the member has less than 10 years of participation in the plan, the defined benefit dollar limitation shall be multiplied by a fraction:

i. the numerator of which is the number of years (or part thereof, but not less than one year) of participation in the plan; and

ii. the denominator of which is 10. In the case of a Member who has less than 10 years of service with the

employer, the defined benefit compensation limitation shall be multiplied by a fraction:

(a). the numerator of which is the number of years (or part thereof, but not less than one year) of Service with the employer; and

(b). the denominator of which is 10.

b. Adjustment of Defined Benefit Dollar Limitation for Benefit Commencement before Age 62 or after Age 65. Effective for benefits commencing in limitation years ending after December 31, 2001, the defined benefit dollar limitation shall be adjusted if the annuity starting date of the member's benefit is before age 62 or after age 65. If the annuity starting date is before age 62, the defined benefit dollar limitation shall be adjusted under Clause b.i of this Paragraph, as modified by Clause b.iii of this Paragraph. If the annuity starting date is after age 65, the defined benefit dollar limitation shall be adjusted under Clause b.ii of this Paragraph, as modified by Clause b.iii of this Paragraph.

i. Adjustment of Defined Benefit Dollar Limitation for Benefit Commencement before Age 62

(a). Limitation Years Beginning before July 1, 2007. If the annuity starting date for the member's benefit is prior to age 62 and occurs in a limitation year beginning before July 1, 2007, the defined benefit dollar limitation for the member's annuity starting date is the annual amount of a benefit payable in the form of a straight life annuity commencing at the member's annuity starting date that is the actuarial equivalent of the defined benefit dollar limitation (adjusted under §101.F.11.a. for years of participation less than 10, if required) with actuarial equivalence computed using whichever of the following produces the smaller annual amount:

(i). the interest rate and the mortality table (or other tabular factor) specified in the plan for adjusting benefits in the same form; or

(ii). a 5 percent interest rate assumption and the applicable mortality table.

(b). Limitation Years Beginning on or After July 1, 2007

(i). Plan Does Not Have Immediately Commencing Straight Life Annuity Payable at Both Age 62 and the Age of Benefit Commencement. If the annuity starting date for the member's benefit is prior to age 62 and occurs in a limitation year beginning on or after July 1, 2007, and the plan does not have an immediately commencing straight life annuity payable at both age 62 and the age of benefit commencement, the defined benefit dollar limitation for the member's annuity starting date is the annual amount of a benefit payable in the form of a straight life annuity commencing at the member's annuity starting date that is the actuarial equivalent of the defined benefit dollar limitation (adjusted under Subparagraph a of this Paragraph for years of participation less than 10, if required) with actuarial equivalence computed using a 5 percent interest rate assumption and the applicable mortality table for the annuity starting date (and expressing the member's age based on completed calendar months as of the annuity starting date).

(ii). Plan Has Immediately Commencing Straight Life Annuity Payable at Both Age 62 and the Age of Benefit Commencement. If the annuity starting date for the member's benefit is prior to age 62 and occurs in a limitation year beginning on or after July 1, 2007, and the plan has an immediately commencing straight life annuity payable at both age 62 and the age of benefit commencement, the defined benefit dollar limitation for the member's annuity starting date is the lesser of the limitation determined under Division b.i.(b).(i) of this Paragraph and the defined benefit dollar limitation (adjusted under Subparagraph a of this Paragraph for years of participation less than 10, if required) multiplied by the ratio of the annual amount of the immediately commencing straight life annuity under the plan at the member's annuity starting date to the annual amount of the immediately commencing straight life annuity under the plan at age 62, both determined without applying the limitations of this article.

ii. Adjustment of Defined Benefit Dollar Limitation for Benefit Commencement after Age 65

(a). Limitation Years Beginning Before July 1, 2007. If the annuity starting date for the member's benefit is after age 65 and occurs in a limitation year beginning before July 1, 2007, the defined benefit dollar limitation for the member's annuity starting date is the annual amount of a benefit payable in the form of a straight life annuity commencing at the member's annuity starting date that is the actuarial equivalent of the defined benefit dollar limitation (adjusted under Subparagraph a of this Paragraph for years of participation less than 10, if required) with actuarial equivalence computed using whichever of the following produces the smaller annual amount:

(i). the interest rate and the mortality table (or other tabular factor) specified in the plan for adjusting benefits in the same form; or

(ii). a 5-percent interest rate assumption and the applicable mortality table.

(b). Limitation Years Beginning Before July 1, 2007

(i) Plan Does Not Have Immediately Commencing Straight Life Annuity Payable at Both Age 65 and the Age of Benefit Commencement. If the annuity starting date for the member's benefit is after age 65 and occurs in a limitation year beginning on or after July 1, 2007, and the plan does not have an immediately commencing straight life annuity payable at both age 65 and the age of benefit commencement, the defined benefit dollar limitation at the member's annuity starting date is the annual amount of a benefit payable in the form of a straight life annuity commencing at the member's annuity starting date that is the actuarial equivalent of the defined benefit dollar limitation (adjusted under Subparagraph a of this Paragraph for years of participation less than 10, if required), with actuarial equivalence computed using a 5 percent interest rate assumption and the applicable mortality table for that annuity starting date (and expressing the member's age based on completed calendar months as of the annuity starting date).

(ii) Plan Has Immediately Commencing Straight Life Annuity Payable at Both Age 65 and the Age of Benefit Commencement. If the annuity starting date for the member's benefit is after age 65 and occurs in a limitation year beginning on or after July 1, 2007, and the plan has an immediately commencing straight life annuity payable at both age 65 and the age of benefit commencement, the defined benefit dollar limitation at the member's annuity

starting date is the lesser of the limitation determined under §101.F.11.b.ii.(b).(i). and the defined benefit dollar limitation (adjusted under §101.F.11.a. for years of participation less than 10, if required) multiplied by the ratio of the annual amount of the adjusted immediately commencing straight life annuity under the plan at the member's annuity starting date to the annual amount of the adjusted immediately commencing straight life annuity under the plan at age 65, both determined without applying the limitations of this article. For this purpose, the adjusted immediately commencing straight life annuity under the plan at the member's annuity starting date is the annual amount of such annuity payable to the member, computed disregarding the member's accruals after age 65 but including actuarial adjustments even if those actuarial adjustments are used to offset accruals; and the adjusted immediately commencing straight life annuity under the plan at age 65 is the annual amount of such annuity that would be payable under the plan to a hypothetical member who is age 65 and has the same accrued benefit as the member.

iii. Notwithstanding the other requirements of this Subparagraph F.10.b., no adjustment shall be made to the defined benefit dollar limitation to reflect the probability of a member's death between the annuity starting date and age 62, or between age 65 and the annuity starting date, as applicable, if benefits are not forfeited upon the death of the member prior to the annuity starting date. To the extent benefits are forfeited upon death before the annuity starting date, such an adjustment shall be made. For this purpose, no forfeiture shall be treated as occurring upon the member's death if the plan does not charge members for providing a qualified preretirement survivor annuity, as defined in Section 417(c) of the Internal Revenue Code, upon the member's death.

c. Minimum Benefit Permitted. Notwithstanding anything else in this section to the contrary, the benefit otherwise accrued or payable to a member under this plan shall be deemed not to exceed the maximum permissible benefit if:

i. the retirement benefits payable for a limitation year under any form of benefit with respect to such member under this plan and under all other defined benefit plans (without regard to whether a plan has been terminated) ever maintained by the employer do not exceed $10,000 multiplied by a fraction:

(a). the numerator of which is the member's number of years (or part thereof, but not less than one year) of service (not to exceed 10) with the employer; and

(b). the denominator of which is 10; and

ii. the employer (or a predecessor employer) has not at any time maintained a defined contribution plan in which the member participated (for this purpose, mandatory employee contributions under a defined benefit plan, individual medical accounts under Section 401(h), and accounts for postretirement medical benefits established under Section 419A(d)(1) are not considered a separate defined contribution plan).

Predecessor Employer—if the employer maintains a plan that provides a benefit which the member accrued while performing services for a former employer, the former employer is a predecessor employer with respect to the member in the plan. A former entity that antedates the employer is also a predecessor employer with respect to a member if, under the facts and circumstances, the employer constitutes a continuation of all or a portion of the trade or business of the former entity.

Severance from Employment—an employee has a severance from employment when the employee ceases to be an employee of the employer maintaining the plan. An employee does not have a severance from employment if, in connection with a change of employment, the employee's new employer maintains the plan with respect to the employee.

Year of Participation—the member shall be credited with a year of participation (computed to fractional parts of a year) for each accrual computation period for which the following conditions are met:

a. the member is credited with at least the number of hours of service (or period of service if the elapsed time method is used) for benefit accrual purposes, required under the terms of the plan in order to accrue a benefit for the accrual computation period; and

b. the member is included as a member under the eligibility provisions of the plan for at least one day of the accrual computation period. If these two conditions are met, the portion of a year of participation credited to the member shall equal the amount of benefit accrual service credited to the member for such accrual computation period. A member who is permanently and totally disabled within the meaning of Section 415(c)(3)(C)(i) of the Internal Revenue Code for an accrual computation period shall receive a year of participation with respect to that period. In addition, for a member to receive a year of participation (or part thereof) for an accrual computation period, the plan must be established no later than the last day of such accrual computation period. In no event shall more than one Year of Participation be credited for any 12-month period.

Year of Service—for purposes of Section 101.G., the member shall be credited with a year of service (computed to fractional parts of a year) for each accrual computation period for which the member is credited with at least the number of hours of service (or period of service if the elapsed time method is used) for benefit accrual purposes, required under the terms of the plan in order to accrue a benefit for the accrual computation period, taking into account only service with the employer or a predecessor employer.

G. Other Rules

1. Benefits under Terminated Plans. If a defined benefit plan maintained by the employer has terminated with sufficient assets for the payment of benefit liabilities of all plan members and a member in the plan has not yet commenced benefits under the plan, the benefits provided pursuant to the annuities purchased to provide the member's benefits under the terminated plan at each possible annuity starting date shall be taken into account in applying the limitations of this article. If there are not sufficient assets for the payment of all Members' benefit liabilities, the benefits taken into account shall be the benefits that are actually provided to the Member under the terminated plan.

2. Benefits Transferred from the Plan. If a Member's benefits under a defined benefit plan maintained by the employer are transferred to another defined benefit plan maintained by the employer and the transfer is not a transfer

of distributable benefits pursuant Section 1.411(d)-4, Q and A-3(c), of the Income Tax Regulations, the transferred benefits are not treated as being provided under the transferor plan (but are taken into account as benefits provided under the transferee plan). If a member's benefits under a defined benefit plan maintained by the employer are transferred to another defined benefit plan that is not maintained by the employer and the transfer is not a transfer of distributable benefits pursuant Section 1.411(d)-4, Q and A-3(c), of the Income Tax Regulations, the transferred benefits are treated by the employer's plan as if such benefits were provided under annuities purchased to provide benefits under a plan maintained by the employer that terminated immediately prior to the transfer with sufficient assets to pay all members' benefit liabilities under the plan. If a member's benefits under a defined benefit plan maintained by the employer are transferred to another defined benefit plan in a transfer of distributable benefits pursuant Section 1.411(d)-4, Q and A-3(c), of the Income Tax Regulations, the amount transferred is treated as a benefit paid from the transferor plan.

3. Formerly Affiliated Plans of the Employer. A formerly affiliated plan of an employer shall be treated as a plan maintained by the employer, but the formerly affiliated plan shall be treated as if it had terminated immediately prior to the cessation of affiliation with sufficient assets to pay members' benefit liabilities under the plan and had purchased annuities to provide benefits.

4. Plans of a Predecessor Employer. If the employer maintains a defined benefit plan that provides benefits accrued by a member while performing services for a predecessor employer, the member's benefits under a plan maintained by the predecessor employer shall be treated as provided under a plan maintained by the employer. However, for this purpose, the plan of the predecessor employer shall be treated as if it had terminated immediately prior to the event giving rise to the predecessor employer relationship with sufficient assets to pay members' benefit liabilities under the plan, and had purchased annuities to provide benefits; the employer and the predecessor employer shall be treated as if they were a single employer immediately prior to such event and as unrelated employers immediately after the event; and if the event giving rise to the predecessor relationship is a benefit transfer, the transferred benefits shall be excluded in determining the benefits provide under the plan of the predecessor employer.

5. Special Rules. The limitations of this chapter shall be determined and applied taking into account the rules in Section 1.415(f)-1(d), (e) and (h) of the Income Tax Regulations.

AUTHORITY NOTE: Promulgated in accordance with R.S. 11:2225(B).

HISTORICAL NOTE: Promulgated by the Board of Trustees of the Municipal Police Employees' Retirement System, LR 39:

§102. Required Minimum Distributions

A.1. Unless the member has elected otherwise on or before December 31, 1983, the entire benefit of a member shall be distributed over a period not longer than the longest of the following periods:

a. the member's life;

b. if the member is married, the life of the member's designated beneficiary;

c. the member's life expectancy;

d. the joint life and last survivor life expectancy of the member and his designated beneficiary.

2. If the member is married and his spouse survives him, the designated beneficiary for at least a qualified joint and survivor annuity and 50 percent of his deferred retirement option plan account shall be his spouse, unless such spouse has consented to the contrary in writing before a notary public. For purposes of this Paragraph, *spouse* shall mean that person who is married to the member under a legal regime of community of acquets and gains on his effective date of retirement or effective date of participation in the deferred retirement option plan, whichever is earlier.

3. If the member was a member on or before December 31, 1983, he shall be deemed to have made the election referred to herein. If a member dies after the commencement of his benefits, the remaining portion of his benefit shall be distributed at least as rapidly as before his death. Payment of survivor benefits shall not be considered to violate this provision.

B.1. If the member dies before his benefit has commenced the remainder of such interest shall be distributed to the member's beneficiary within five years after the date of such member's death.

2. Paragraph 1 of this Subsection shall not apply to any portion of a member's benefit which is payable to or for the benefit of a designated beneficiary or beneficiaries, over the life of or over the life expectancy of such beneficiary, so long as such distributions begin not later than one year after the date of the member's death, or, in the case of the member's surviving spouse, the date the member would have attained the age of 70 1/2. If the designated beneficiary is the member's surviving spouse and if the surviving spouse dies before the distribution of benefits commences, then Paragraph 1 of this Subsection shall be applied as if the surviving spouse were the member. If the designated beneficiary is a child of the member, for purposes of satisfying the requirement of Paragraph 1 of this Subsection, any amount paid to such child shall be treated as if paid to the member's surviving spouse if such amount would become payable to such surviving spouse, if alive, upon the child's reaching age eighteen or, if later, upon the child's completing a designated event. For purposes of the preceding sentence, a designated event shall be the later of the date the child is no longer disabled, or the date the child ceases to be a full-time student or attains age 23, if earlier.

3. Paragraph 1 of this Subsection shall not apply if the distribution of the member's interest has commenced and is for a term certain over a period permitted in Subsection A of this Section.

4. Paragraph 1 of this Subsection shall not apply if the member has elected otherwise on or before December 31, 1983, or such later date to which such election period shall be subject under Internal Revenue Code Section 401(a).

C. As to any benefit payable by the retirement system which is not optional as of December 31, 1983, the member shall be considered to have made the election referred to in Subsections A and B of this Section, if he was a member on or before such time.

D. If by operation of law or by action of the board of trustees, a survivor benefit is payable to a specified person or persons, the member shall be considered to have designated such person as an alternate beneficiary hereunder. If there is

more than one such person, then the youngest disabled child shall be considered to have been so designated, or, if none, then the youngest person entitled to receive a survivor benefit shall be considered to have been so designated. The designation of a designated beneficiary hereunder shall not prevent payment to multiple beneficiaries but shall only establish the permitted period of payments.

E. Payment in accordance with the survivor benefit provisions of R.S. 11:2220.4 and 2222 shall be deemed not to violate Subsections A and B of this Section.

F. This Section shall be effective for members of the system who complete any service under the system on or after July 1, 1992, with employers contributing to the system.

G. Distributions from the system shall be made in accordance with the requirements set forth in Internal Revenue Code Section 401(a)(9), including the minimum distribution incidental benefit rules applicable thereunder.

H.1. A member's benefits shall commence to be paid on or before the required beginning date.

2. The required beginning date shall be April 1 of the calendar year following the later of the calendar year in which the member attains 70 1/2 years of age, or the calendar year in which the employee retires. Effective for plan years beginning on or after January 1, 1998, the required beginning date shall be April 1 of the year following the later of the year the member attained 70 1/2 or the year he terminated employment.

AUTHORITY NOTE: Promulgated in accordance with R.S. 11:2225(B).

HISTORICAL NOTE: Promulgated by the Board of Trustees of the Municipal Police Employees' Retirement System, LR 39:

§103. Direct Rollovers

A. Notwithstanding any other provision of law to the contrary that would otherwise limit a distributee's election under this Section, a distributee may elect, at the time and in the manner prescribed by the board of trustees, to have any portion of an "eligible rollover distribution", as specified by the distributee, paid directly to an "eligible retirement plan", as those terms are defined below.

B. The following definitions shall apply.

Eligible Rollover Distribution—any distribution of all or any portion of the balance to the credit of the distributee, except that an eligible rollover distribution does not include:

a. any distribution that is one of a series of substantially equal periodic payments, not less frequently than annually, made for the life or life expectancy of the member, or the joint lives or joint life expectancies of the member and the member's designated beneficiary, or for a specified period of ten years or more;

b. any distribution to the extent that such distribution is required under Section 401(a)(9) of the United States Internal Revenue Code; and

c. any distribution which is made upon hardship of the employee.

Eligible Retirement Plan—any of the following:

a. an individual retirement account described in Section 408(a) of the Internal Revenue Code;

b. an individual retirement annuity described in Section 408(b) of the Internal Revenue Code;

c. an annuity plan described in Section 403(a) of the Internal Revenue Code;

d. a qualified trust as described in Section 401(a) of the Internal Revenue Code, provided that such trust accepts the member's eligible rollover distribution;

e. an eligible deferred compensation plan described in Section 457(b) of the Internal Revenue Code that is maintained by an eligible governmental employer, provided the plan contains provisions to account separately for amounts transferred into such plan; and

f. an annuity contract described in Section 403(b) of the Internal Revenue Code.

Distributee—shall include:

a. a member or former member;

b. the member's or former member's surviving spouse, or the member's or former member's former spouse with whom a benefit or a return of employee contributions is to be divided pursuant to R.S. 11:291(B), with reference to an interest of the member or former spouse;

c. the member's or former member's non-spouse beneficiary, provided the specified distribution is to an eligible retirement plan as defined in Subparagraphs a and b of the definition of *eligible retirement plan* in this Section.

Direct Rollover—a payment by the system to the eligible retirement plan specified by the distributee.

AUTHORITY NOTE: Promulgated in accordance with R.S. 11:2225(B).

HISTORICAL NOTE: Promulgated by the Board of Trustees of the Municipal Police Employees' Retirement System, LR 39:

§104. Annual Compensation Limitation

A. Unless otherwise provided in this Chapter, the accrued benefit of each "Section 401(a)(17) employee" as that term is defined below shall be the greater of the following:

1. The employee's accrued benefit determined with respect to the benefit formula applicable for the plan year beginning on or after January 1, 1996, as applied to the employee's total years of service taken into account for purposes of benefit accruals.

2. The sum of:

a. the employee's accrued benefit as of the last day of the last plan year beginning before January 1, 1996, frozen in accordance with the provisions of Section 1.401(a)(4)-1 through 1.401(a)(4)-13 of the Code of Federal Regulations;

b. the employee's accrued benefit determined under the benefit formula applicable for the plan year beginning on or after January 1, 1996, as applied to the employee's years of service credited to the employee for plan years beginning on or after January 1, 1996, for purposes of benefit accruals.

B. A *Section 401(a)(17) employee* shall mean any employee whose current accrued benefit, as of a date on or after the first day of the first plan year beginning on or after January 1, 1996, is based on compensation for a year beginning prior to the first day of the first plan year beginning on or after January 1, 1996, that exceeded $150,000.

C. If an employee is not a "Section 401(a)(17) employee", his accrued benefit in this system shall not be based upon compensation in excess of the annual limit of

Section 401(a)(17) of the United States Internal Revenue Code as amended and revised.

AUTHORITY NOTE: Promulgated in accordance with R.S. 11:2225(B).

HISTORICAL NOTE: Promulgated by the Board of Trustees of the Municipal Police Employees' Retirement System, LR 39:

Family Impact Statement

The proposed adoption of LAC 58:XVIII.101, regarding Internal Revenue Code provisions applicable to the Municipal Police Employees' Retirement System, should not have any known or foreseeable impact on any family as defined by R.S. 49:972(D) or on family formation, stability and autonomy. Specifically, there should be no known or foreseeable effect on:

1. the stability of the family;
2. the authority and rights of parents regarding the education and supervision of their children;
3. the functioning of the family;
4. family earnings and family budget;
5. the behavior and personal responsibility of children; or
6. the ability of the family or a local government to perform the function as contained in the proposed Rule.

Poverty Impact Statement

The proposed rulemaking will have no impact on poverty as described in R.S. 49:973.

Public Comments

Any interested person may submit written comments regarding this proposed Rule to Kathy Bourque, Director, Municipal Police Employees' Retirement System by mail to 7722 Office Park Blvd., Suite 200, Baton Rouge, LA 70809. All comments must be received no later than 4:30 p.m., March 15, 2013.

Kathy Bourque
Director

FISCAL AND ECONOMIC IMPACT STATEMENT FOR ADMINISTRATIVE RULES
RULE TITLE: Internal Revenue Code Provisions

I. ESTIMATED IMPLEMENTATION COSTS (SAVINGS) TO STATE OR LOCAL GOVERNMENT UNITS (Summary)

There is no anticipated direct material effect on state or local governmental units. Act 511 of the 2012 Regular Legislative Session repealed statutes providing for compliance with federal tax qualification requirements and required the Board of Trustees for the Municipal Police Employees' Retirement System to promulgate rules incorporating such Internal Revenue Code Provisions into the retirement system's plan.

II. ESTIMATED EFFECT ON REVENUE COLLECTIONS OF STATE OR LOCAL GOVERNMENTAL UNITS (Summary)

There is no anticipated impact on revenue collections of state or local governmental units as a result of the proposed rule change.

III. ESTIMATED COSTS AND/OR ECONOMIC BENEFITS TO DIRECTLY AFFECTED PERSONS OR NONGOVERNMENTAL GROUPS (Summary)

There are no anticipated costs and/or economic benefits to directly affected persons or non-governmental groups as a result of the proposed rule change.

IV. ESTIMATED EFFECT ON COMPETITION AND EMPLOYMENT (Summary)

There is no anticipated impact on competition and employment as a result of the proposed rule change.

Kathy Bourque	Evan Brasseaux
Director	Staff Director
1302#019	Legislative Fiscal Office

NOTICE OF INTENT

Department of Wildlife and Fisheries
Wildlife and Fisheries Commission

General and Wildlife Management Area Hunting Rules and Regulations (LAC 76:XIX.111)

The Wildlife and Fisheries Commission does hereby give notice of its intent to promulgate rules and regulations governing the hunting of resident game birds and game quadrupeds.

Title 76
WILDLIFE AND FISHERIES
Part XIX. Hunting and WMA Regulations
Chapter 1. Resident Game Hunting Season
§111. General and Wildlife Management Area Hunting Rules and Regulations

A. Hunting Seasons and Wildlife Management Area (WMA) Regulations

1. The rules and regulations contained within this digest have been officially approved and adopted by the Wildlife and Fisheries Commission under authority vested by Sections 115 and 116 of Title 56 of the *Louisiana Revised Statutes* of 1950 and are in full force and effect in conjunction with all applicable statutory laws. The Secretary of the Department of Wildlife and Fisheries (LDWF) has the authority to close or alter seasons in emergency situations in order to protect fish and wildlife resources.

2. Pursuant to Section 40.1 of Title 56 of the Louisiana Revised Statutes of 1950, the Wildlife and Fisheries Commission has adopted monetary values which are assigned to all illegally taken, possessed, injured or destroyed fish, wild birds, wild quadrupeds and other wildlife and aquatic life. Anyone taking, possessing, injuring or destroying fish, wild birds, wild quadrupeds and other wildlife and aquatic life shall be required to reimburse the LDWF a sum of money equal to the value of the wildlife illegally taken, possessed, injured or destroyed. This monetary reimbursement shall be in addition to any and all criminal penalties imposed for the illegal act.

B. Resident Game Birds and Animals

1. Shooting hours: one-half hour before sunrise to one-half hour after sunset.

C. Other Season Dates

1. Turkey. Please refer to separate pamphlet.

2. Raccoon and Opossum. No closed season. Raccoon and opossum can be taken at night by one or more licensed hunters with one or more dogs and one .22 caliber or smaller rimfire firearm. A licensed hunter may take raccoon or opossum with .22 caliber or smaller firearm, .36 caliber or smaller muzzleloader rifle or shotgun during daylight hours.

Hunting from boats or motor vehicles is prohibited. No bag limit for nighttime or daytime raccoon or opossum hunting during the open trapping season except on certain WMAs as listed. The remainder of the year, the raccoon and opossum bag limit for daytime or nighttime is two per person per day or night. No one who hunts raccoons or opossums as prescribed above shall pelt during the closed trapping season nor sell skins or carcasses of raccoons and opossums taken during the open trapping season unless he is the holder of a valid trapping license which shall be required in addition to his basic hunting license. Pelting or selling carcasses is illegal during closed trapping season.

3. Nutria. On WMAs and private property nutria may be taken recreationally by licensed hunters from September 1 through the last day of February, during legal shooting hours by any legal hunting method with a daily limit of five. Except nutria may be taken on Atchafalaya Delta, Salvador/Timken, Pointe Aux Chenes and Pass a Loutre WMAs from September 1 to March 31. When taken with a shotgun, steel shot must be used. On WMAs during waterfowl seasons, nutria may be taken only with the use of shotguns with shot no larger than F steel, and during gun deer seasons, anyone taking nutria must display 400 square inches of "hunter orange" and wear a "hunter orange" cap or hat. Recreational nutria hunters must remove each nutria carcass in whole condition from the hunting area, except that nutria may be gutted. Possession of detached nutria parts, including nutria tails, by recreational hunters is illegal. Nutria harvested recreationally may not be pelted nor may such nutria or any nutria parts from recreationally taken nutria be sold, including the tail. Trespassing upon private property for the purpose of taking nutria or other furbearing animals is punishable by fines and possible jail time (R.S. 56:265). The Coastwide Nutria Control Program is a separate program and is in no way related to the nutria recreational season. For questions on the Coastwide Nutria Control Program, call the New Iberia office (337) 373-0032.

4. Blackbirds and Crows. The season for crows shall be September 1 through January 1 with no limit; however crows, blackbirds, cowbirds and grackles may be taken year round during legal shooting hours if they are depredating or about to depredate upon ornamentals or shade trees, agricultural crops, livestock, wildlife, or when concentrated in such numbers as to cause a health hazard. Louisiana has determined that the birds listed above are crop depredators and that crows have been implicated in the spread of the West Nile virus in humans. As described in 50 CFR Part 21, non-toxic shot must be used for the take of crows, blackbirds, cowbirds and grackles under the special depredation order. In addition an annual report has to be submitted to the U.S. Fish and Wildlife Service for those that participate in the take of these species.

5. Pheasant. Open concurrently with the quail season; no limit.

6. Falconry. Special permit required. Resident and migratory game species may be taken except turkeys. Seasons and bag limits are the same as for statewide and WMA regulations. Refer to LAC 76:V.301 for specific Falconry Rules.

7. Licensed Hunting Preserve. October 1 - April 30. Pen-raised birds only. No limit entire season. Refer to LAC 76:V.305 for specific Hunting Preserve Rules.

8. Deer Management Assistance Program (DMAP). Refer to LAC 76:V.111 for specific DMAP Rules. Deer management assistance tags must be in the possession of the hunter in order to harvest an antlerless deer. The tag shall be attached through the hock in such a manner that it cannot be removed before the deer is transported (including those taken on either-sex days and those taken with approved archery equipment or primitive firearms). Antlerless deer harvested on property enrolled in DMAP does not count in the season or daily bag limit for hunters. Failure to do so is a violation of R.S. 56:115. Failing to follow DMAP rules and regulations may result in suspension and cancellation of the program on those lands involved. DMAP participants must follow the deer season schedule established for their respective areas.

9. Farm Raised White-Tailed Deer and Exotics on Licensed Supplemented Shooting Preserves

a. Definitions

Exotics—for purposes of this Section means any animal of the family Bovidae (except the Tribe Bovini [cattle]) or Cervidae which is not indigenous to Louisiana and which is confined on a Supplemented Hunting Preserve. Exotics shall include, but are not limited to, fallow deer, red deer, elk, sika deer, axis deer, and black buck antelope.

Hunting—in its different tenses and for purposes of this Section means to take or attempt to take, in accordance with R.S. 56:8.

Same as Outside—for purposes of this Section means hunting on a Supplemented Hunting Preserve must conform to applicable statutes and rules governing hunting and deer hunting, as provided for in Title 56 of the Louisiana Revised Statutes and as established annually by the Wildlife and Fisheries Commission.

Supplemented Hunting Preserve—for purposes of this Section means any enclosure for which a current Farm-Raising License has been issued by the Department of Agriculture and Forestry (LDAF) with concurrence of the LDWF and is authorized in writing by the LDAF and LDWF to permit hunting.

White-Tailed Deer—For purposes of this rule means any animal of the species Odocoileus virginianus which is confined on a Supplemented Hunting Preserve.

b. Seasons

i. Farm-Raised White-Tailed Deer: consult the regulations pamphlet.

ii. Exotics: year round.

c. Methods of Take

i. White-Tailed Deer: same as outside.

ii. Exotics: Exotics may be taken with longbow (including compound bow and crossbow) and arrow; shotguns not larger than 10 gauge, loaded with buckshot or rifled slug; handguns and rifles no smaller than .22 caliber centerfire; or muzzleloading rifles or pistols, .44 caliber minimum, or shotguns 10 gauge or smaller, all of which must load exclusively from the muzzle or cap and ball cylinder, using black powder or an approved substitute only, and using ball or bullet projectile, including saboted bullets only and other approved primitive firearms.

d. Shooting Hours

i. White-Tailed Deer: same as outside.

ii. Exotics: one-half hour before sunrise to one-half hour after sunset.

e. Bag Limit

i. Farm-Raised White-Tailed Deer: same as outside.

ii. Exotics: No limit.

f. Hunting Licenses

i. White-Tailed Deer: same as outside.

ii. Exotics: No person shall hunt any exotic without possessing a valid basic and big game hunting license.

g. Tagging. White-Tailed Deer and Exotics: Each animal shall be tagged in the left ear or left antler immediately upon being killed and before being moved from the site of the kill with a tag provided by the LDAF. The tag shall remain with the carcass at all times.

10. Bobcat. No person other than the holder of a valid big game license may take or possess bobcat, except licensed trappers who may take or possess bobcat during the open trapping season. A big game licensee shall only take bobcat during the time period from one-half hour before sunrise to one-half hour after sunset with approved archery equipment, shotgun, muzzleloader or centerfire firearm. A big game licensee shall not take more than one bobcat per calendar year. This regulation applies only to property that is privately owned, state WMAs, and the Bayou des Ourses, Bodcau, Bonnet Carre, Indian Bayou, Loggy Bayou and Soda Lake tracts owned by the Corps of Engineers but does not apply to state wildlife refuges, or other federally owned refuges and lands. On state WMAs, the take of bobcat is restricted to those open seasons on the WMAs which require the respective legal weapons noted above.

D. Hunting-General Provisions

1. A basic resident or non-resident hunting license is required of all persons to hunt, take, possess or cause to be transported by any other person any wild bird or quadruped. See information below for exceptions.

2. No person born on or after September 1, 1969, shall hunt unless that person has first been issued a certificate of satisfactory completion of a firearm and hunter education course approved by the department, except any active or veteran member of the United States armed services or any POST-certified law enforcement officer. Application for the exemption shall be filed in person at the LDWF main office building in the city of Baton Rouge. A person under sixteen years of age may hunt without such certificate if he/she is accompanied by and is under the direct supervision of a person who was born before September 1, 1969, and has a valid hunting license or who is eighteen years of age or older and has proof of successful completion of a firearm and hunter education course approved by the department.

3. A big game license is required in addition to the basic hunting license to hunt, take, possess or cause to be transported any deer. A separate wild turkey license is required in addition to the basic hunting license and the big game license to hunt, take, possess or cause to be transported any turkey.

4. Taking game quadrupeds or birds from aircraft or participating in the taking of deer with the aid of aircraft or from automobiles or other moving land vehicles is prohibited.

5. Methods of Taking Resident Game Birds and Quadrupeds

a. It is illegal to intentionally feed, deposit, place, distribute, expose, scatter, or cause to be fed, deposited, placed, distributed, exposed, or scattered raw sweet potatoes to wild game quadrupeds.

b. Use of a longbow (including compound bow and crossbow) and arrow or a shotgun not larger than a 10 gauge fired from the shoulder without a rest shall be legal for taking all resident game birds and quadrupeds. Also, the use of a handgun, rifle and falconry (special permit required) shall be legal for taking all game species except turkey. It shall be illegal to hunt or take squirrels or rabbits at any time with a breech-loaded rifle or handgun larger than a .22 caliber rimfire or a primitive firearm larger than .36 caliber. It shall be legal to hunt or take squirrels, rabbits, and outlaw quadrupeds with air rifles. During closed deer gun season, it shall be illegal to possess shotgun shells loaded with slugs or shot larger than BB lead or F steel shot while small game hunting.

c. Still hunting is defined as stalking or stationary stand hunting without the use of dog(s). Pursuing, driving or hunting deer with dogs is prohibited when or where a still hunting season or area is designated, and will be strictly enforced. Shotguns larger than 10 gauge or capable of holding more than three shells shall be prohibited. Plugs used in shotguns must be incapable of being removed without disassembly. Refer to game schedules contained within these regulations for specific restrictions on the use of firearms and other devices.

d. No person shall take or kill any game bird or wild quadruped with a firearm fitted with any device to deaden or silence the sound of the discharge thereof; or fitted with an infrared sight, laser sight, or except as provided in R.S. 56:116(A)(8) any sighting device which projects a beam of light to the target or otherwise electronically illuminates the target, or device specifically designed to enhance vision at night [R.S. 56:116.1.B(3)].

6. Nuisance Animals. Landowners or their designees may remove beaver and nutria causing damage to their property without a special permit. Water set traps and firearms may be used to remove beaver; nutria may be removed by any means except that nutria cannot be taken by the use of headlight and gun between the hours of sunset and sunrise. With a special permit issued by the LDWF, beavers may be taken between one-half hour after official sunset to one-half hour before official sunrise for a period of three consecutive calendar evenings from the effective date of the permit. For specific details contact a region office near you. Any nuisance beaver or nutria trapped or shot outside open trapping season cannot be pelted or sold. A trapping license is required to sell or pelt nuisance beavers or nutria taken during open trapping season. Squirrels found destroying commercial crops of pecans may be taken year-round by permit issued by the LDWF. This permit shall be valid for 30 days from the date of issuance. Contact the local region office for details.

7. Threatened and Endangered Species: Louisiana black bear, Louisiana pearl shell (mussel), sea turtles, gopher tortoise, ringed sawback turtle, brown pelican, bald eagle, peregrine falcon, whooping crane, Eskimo curlew, piping plover, interior least tern, ivory-billed woodpecker, red-cockaded woodpecker, Bachman's warbler, West Indian

manatee, Florida panther, pallid sturgeon, Gulf sturgeon, Attwater's greater prairie chicken, whales and red wolf. Taking or harassment of any of these species is a violation of state and federal laws.

8. Outlaw Quadrupeds. Holders of a legal hunting license may take coyotes, feral hogs where legal, and armadillos year round during legal daylight shooting hours. The running of coyotes with dogs is prohibited in all turkey hunting areas during the open turkey season. Coyote hunting is restricted to chase only when using dogs during still hunting segments of the firearm and archery only season for deer. Foxes are protected quadrupeds and may be taken only with traps by licensed trappers during the trapping season. Remainder of the year "chase only" allowed by licensed hunters.

9. Nighttime take of nuisance animals and outlaw quadrupeds. On private property, the landowner, or his lessee or agent with written permission and the landowner's contact information in his possession, may take outlaw quadrupeds (coyotes, armadillos and feral hogs), nutria or beaver during the nighttime hours from one-half hour after official sunset on the last day of February to one-half hour after official sunset the last day of August of that same year. Such taking may be with or without the aid of artificial light, infrared or laser sighting devices, or night vision devices. In addition, pursuant to R.S. 56:116(D)(3) any person who is authorized to possess a firearm suppressor may use a firearm fitted with a sound suppressor when taking outlaw quadrupeds, nutria, or beaver. Any person attempting to take outlaw quadrupeds under the provisions of the paragraph, within 24 hours prior to the attempted taking, shall notify the sheriff of the parish in which the property is located of his intention to attempt to take outlaw quadrupeds under the provision of this paragraph.

10. Hunting and/or Discharging Firearms on Public Roads. Hunting, standing, loitering or shooting game quadrupeds or game birds with a gun during open season while on a public highway or public road right-of-way is prohibited. Hunting or the discharge of firearms on roads or highways located on public levees or within 100 feet from the centerline of such levee roads or highways is prohibited. Spot lighting or shining from public roads is prohibited by state law. Hunting from all public roads and rights-of-way is prohibited and these provisions will be strictly enforced.

11. Tags. Any part of the deer or wild turkey divided shall have affixed thereto the name, date, address and big game license number of the person killing the deer or wild turkey and the sex of that animal. This information shall be legibly written in pen or pencil, on any piece of paper or cardboard or any material, which is attached or secured to or enclosing the part or parts. On lands enrolled in DMAP, deer management assistance tags must be attached and locked through the hock of antlerless deer, (including those taken with approved archery and primitive firearms, and those antlerless deer taken on either-sex days) in a manner that it cannot be removed, before the deer is moved from the site of the kill.

12. Sex Identification. Positive evidence of sex identification, including the head or sex organs, shall remain on any deer taken or killed within the state of Louisiana, or on all turkeys taken or killed during any special gobbler season when killing of turkey hens is prohibited, so long as such deer or turkey is kept in camp or field, or is in route to the domicile of its possessor, or until such deer or turkey has been stored at the domicile of its possessor or divided at a cold storage facility and has become identifiable as food rather than as wild game.

E. General Deer Hunting Regulations

1. Prior to hunting deer, all deer hunters, regardless of age or license status, must obtain deer tags and have in possession when hunting deer. Immediately upon harvesting a deer, the hunter must tag the deer with the appropriate carcass tag and document the kill on the deer tag license. Within seven days the hunter must validate the kill. Hunters harvesting deer on DMAP lands can validate deer per instructions by LDWF using the DMAP harvest data sheets. Hunters on WMAS can validate deer during mandatory deer check hunts, when deer check stations are in operation. Hunters may validate deer by calling the validation toll free number or using the validation web site.

2. 2013-2014 Season. One antlered and one antlerless deer per day (when legal) except on National Forest Lands, Catahoula and Red Dirt National Wildlife Management Preserves within Kisatchie National Forest, and some Federal Refuges (check refuge regulations) where the daily limit shall be one deer per day. Season limit is six, not to exceed three antlered deer or four antlerless deer (all segments included) by all methods of take, except antlerless harvest on property enrolled in DMAP does not count in the season or daily bag limit for hunters. Antlerless deer may be harvested during entire deer season on private lands (all segments included) except in West Carroll Parish, and except Deer Areas 4, 7, 9, and 10 as specified in deer hunting schedule. Consult deer hunting schedule in the regulations pamphlet for either-sex days for these parishes and areas. This does not apply to public lands (WMAs, National Forest Lands, and Federal Refuges) which will have specified either-sex days.

3. 2014-15 Season. One antlered and one antlerless deer per day (when legal) except on National Forest Lands, Catahoula and Red Dirt National Wildlife Management Preserves within Kisatchie National Forest, and some Federal Refuges (check refuge regulations) where the daily limit shall be one deer per day. Season limit is six, not to exceed three antlered deer or four antlerless deer (all segments included) by all methods of take, except antlerless harvest on property enrolled in DMAP does not count in the season or daily bag limit for hunters. Antlerless deer may be harvested during entire deer season on private lands (all segments included) except in West Carroll Parish and except Deer Areas 4, 7, 9, and 10 as specified in deer hunting schedule. Consult deer hunting schedule in the regulations pamphlet for either-sex days for these parishes and areas. This does not apply to public lands (WMAs, National Forest Lands, and Federal Refuges) which will have specified either-sex days.

4. A legal antlered deer is a deer with at least one visible antler of hardened bony material, broken naturally through the skin, except on Alexander State Forest WMA, Bayou Macon WMA, Big Lake WMA, Bodcau WMA, Boeuf WMA, Buckhorn WMA, Dewey Wills WMA, Jackson-Bienville WMA, Loggy Bayou WMA, Ouachita WMA, Pearl River WMA, Pomme de Terre WMA, Red River WMA, Russell Sage WMA, Sicily Island Hills WMA,

Spring Bayou WMA, Three Rivers WMA and Union WMA during the Experimental Quality Deer Season (See the specific WMA schedule for more information). A legal antlered deer during the Experimantal Quality Deer Season shall be defined as a deer with at least four points on one side. To be counted as a point, a projection must be at least on inch long and its length must exceed the length of its base. The beam tip is counted as a point but not measured as a point. Killing antlerless deer is prohibited except where specifically allowed.

5. Either-sex deer is defined as male or female deer. Taking or possessing spotted fawns is prohibited.

6. It is illegal to hunt or shoot deer with firearms smaller than .22 caliber centerfire or a shotgun loaded with anything other than buckshot or rifled slug. Handguns may be used for hunting.

7. Taking game quadrupeds or birds from aircraft, participating in the taking of deer with the aid of aircraft or from automobiles or other moving land vehicles is prohibited.

8. Still hunting is defined as stalking or stationary stand hunting without the use of dog(s). Pursuing, driving or hunting deer with dogs or moving vehicles, including ATVs, when or where a still hunting season or area is designated, is prohibited and will be strictly enforced. The training of deer dogs is prohibited in all still hunting areas during the gun still hunting and archery only season. Deer hunting with dogs is allowed in all other areas having open deer seasons that are not specifically designated as still hunting only. A leashed dog may be used to trail and retrieve wounded or unrecovered deer during legal hunting hours. Any dog used to trail or retrieve wounded or unrecovered deer shall have on a collar with owner's name, address, and phone number. In addition, a dog may be used to trail and retrieve unrecovered deer after legal hunting hours; however, no person accompanying a dog after legal hunting hours may carry a firearm of any sort.

9. It is illegal to take deer while deer are swimming or while the hunter is in a boat with motor attached in operating position; however the restriction in this paragraph shall not apply to any person who has lost one or more limbs.

10. Areas not specifically designated as open are closed.

11. Primitive Firearms Segment: (Special license and primitive firearms specifications apply only to the special state, WMA, National Forest and Preserves, and Federal Refuge seasons.) Still hunt only. Specific WMAs will also be open, check WMA schedule for specific details. Primitive firearms license is required for resident hunters between the ages of 16 and 59 inclusive and non-residents 16 years of age and older. Either-sex deer may be taken in all deer hunting areas except as specified on public areas. It is unlawful to carry a gun, other than a primitive firearm, including those powered by air or other means, while hunting during the special primitive firearms segment. Except, it is lawful to carry a .22 caliber rimfire pistol loaded with #12 shot (ratshot only).

a. Legal Primitive Firearms For Special Season: Rifles or pistols, .44 caliber minimum, or shotguns 10 gauge or smaller, all of which must load exclusively from the muzzle or cap and ball cylinder, use black powder or approved substitute only, take ball or bullet projectile only, including saboted bullets and may be fitted with magnified scopes. This includes muzzleloaders known as "inline" muzzleloaders.

b. Single shot, breech loading rifles, .38 .35 caliber or larger, or of a commission approved caliber having an exposed hammer that use metallic cartridges loaded either with black powder or modern smokeless powder and may be fitted with magnified scopes.

c. Single shot, breech loading shotguns, 10 gauge or smaller, having an exposed hammer, loaded with buckshot or rifled slug.

d. Special Youth Deer Season on Private Land (either-sex): youths 17 or younger may hunt deer with any legal weapon during the Primitive Firearms Season in each deer hunting area.

12. Archery Segment: Consult regulations pamphlet. WMA seasons are the same as outside except as noted below. Archery license required for resident bow hunters between the ages of 16 and 59 inclusive and non-residents 16 years of age and older. Either-sex deer may be taken in all areas open for deer hunting except when a bucks only season is in progress for gun hunting, and except in Area 6 from October 1-15. Archer's must conform to the bucks only regulations. Either-sex deer may be taken on WMAs at anytime during archery season except when bucks only seasons are in progress on the respective WMA. Also, archery season restricted on Atchafalaya Delta, Salvador, Lake Boeuf, and Pointe-aux-Chenes WMAs (see schedule).

a. Bow and Arrow Regulations: Longbow, compound bow and crossbow or any bow drawn, held or released by mechanical means will be a legal means of take for all properly licensed hunters. Hunting arrows for deer must have well-sharpened broadhead points. Bow and arrow fishermen must have a sport fishing license and not carry any arrows with broadhead points unless a big game season is in progress.

i. It is unlawful:

(a). to carry a gun, including those powered by air or other means, while hunting with bow and arrow during the special bow and arrow deer season except it is lawful to carry a .22 caliber rimfire pistol loaded with #12 shot (ratshot) only;

(b). to have in possession or use any poisoned or drugged arrow or arrows with explosive tips;

(c). to hunt deer with a bow having a pull less than 30 pounds;

(d). to hunt with a bow or crossbow fitted with an infrared, laser sight, electrically-operated sight or device specifically designed to enhance vision at night (does not include non-projecting red dot sights) [R.S. 56:116.1.B.(4)].

13. Hunter Orange. Any person hunting any wildlife during the open gun deer hunting season and possessing buckshot, slugs, a primitive firearm, or a centerfire rifle shall display on his head, chest and/or back a total of not less than 400 square inches of "hunter orange". Persons hunting on privately owned, legally posted land may wear a hunter orange cap or hat in lieu of the 400 square inches. These provisions shall not apply to persons hunting deer from elevated stands on property that is privately owned and legally posted or to archery deer hunters hunting on legally posted lands where firearm hunting is not allowed by agreement of the landowner or lessee. However, anyone

hunting deer on such lands where hunting with firearms is allowed shall be required to display the 400 square inches or a hunter orange cap or hat while walking to and from elevated stands. While a person is hunting from an elevated stand, the 400 square inches or cap or hat may be concealed. Warning: deer hunters are cautioned to watch for persons hunting other game or engaged in activities not requiring "hunter orange".

14. Special Physically Challenged either-sex deer season on private land: 1st Saturday of October for 2 days. Restricted to individuals with Physically Challenged Hunter Permit.

15. Special Youth Deer Hunt on Private Lands (Either-Sex). Areas 1, 4, 5, 6 and 9 - last Saturday of October for 7 days; Area 2 - 2nd Saturday of October for 7 days; and Areas 3, 7, 8 and 10 - 4th Saturday of September for 7 days. Youths 17 or younger only. Youths must be accompanied by an adult 18 years of age or older. Youths must possess a hunter safety certification or proof of successful completion of a hunter safety course. If the accompanying adult is in possession of hunter safety certification, a valid hunting license or proof of successful completion of a hunter safety course, this requirement is waived for the youth. Adults may not possess a firearm. Youths may possess only one firearm while hunting. Legal firearms are the same as described for deer hunting. The supervising adult shall maintain visual and voice contact with the youth at all times. Except properly licensed youths 16-17 years old and youths 12 years old or older who have successfully completed a hunter safety course may hunt without a supervising adult. In addition,

F. Description of Areas, 2013-2015

1. Area 1

a. All of the following parishes are open: Concordia, East Carroll, Franklin, Madison, Richland, Tensas.

b. Portions of the following parishes are also open:

i. Catahoula—east of Boeuf River to Ouachita River, east of Ouachita River from its confluence with Boeuf River to LA 8, south and east of LA 8 southwesterly to Parish line.

ii. Grant—east of US 165 and south of LA 8.

iii. LaSalle—south of a line beginning where Little River enters Catahoula Lake following the center of the lake eastward to Old River then to US 84, east of US 84 northward to LA 8, south of LA 8 eastward to Parish line.

iv. Ouachita—south of US 80 and east of Ouachita River, east of LA 139 from Sicard to junction of LA 134, south of LA 134 to Morehouse line at Wham Bake.

v. Rapides—east of US 165 and north of Red River.

c. Still hunting only in all or portions of the following parishes:

i. Catahoula—south of Deer Creek to Boeuf River, east of Boeuf and Ouachita Rivers to LA 8 at Harrisonburg, west of LA 8 to LA 913, west of LA 913 and LA 15 to Deer Creek.

ii. East Carroll—all.

iii. Franklin—all.

iv. Morehouse—east of US 165 (from Arkansas state line) to Bonita, south and east of LA 140 to junction of LA 830-4 (Cooper Lake Road), east of LA 830-4 to Bastrop, east of LA 139 at Bastrop to junction of LA 593, east and north of LA 593 to Collinston, east of LA 138 to junction of LA 134 and south of LA 134 to Ouachita line at Wham Brake.

v. Ouachita—south of US 80 and east of Ouachita River, east of LA 139 from Sicard to junction of LA 134, south of LA 134 to Morehouse line at Wham Bake.

vi. Richland—all.

2. Area 2

a. All of the following parishes are open:

i. Bienville, Bossier, Caddo, Caldwell, Claiborne, DeSoto, Jackson, Lincoln, Natchitoches, Red River, Sabine, Union, Webster, Winn;

ii. except: Kisatchie National Forest which has special regulations. Caney, Corney, Middlefork tracts of Kisatchie have the same regulations as Area 2, except still hunting only for deer and except National Forest Land within the Evangeline Unit, Calcasieu Ranger District described in Area 2 description shall be still hunting only.

b. Portions of the following parishes are also open:

i. Allen—north of US 190 from parish line westward to Kinder, east of US 165 from Kinder northward to LA 10 at Oakdale, north of LA 10 from Oakdale westward to the parish line;

ii. Avoyelles—that portion west of I-49;

iii. Catahoula—west of Boeuf River to Ouachita River, west of Ouachita River from its confluence with Boeuf River to LA 8, north and west of LA 8 southwesterly to Parish line;

iv. Evangeline—all except the following portions: east of I-49 to junction of LA 29, east of LA 29 south of I-49 to Ville Platte, and north of US 167 east of Ville Platte;

v. Grant—all except that portion south of LA 8 and east of US 165;

vi. Jefferson Davis—north of US 190;

vii. LaSalle—north of a line beginning where Little River enters Catahoula Lake, following the center of the lake eastward to Old River then to US 84, west of US 84 northward to LA 8, north of LA 8 eastward to Parish line;

viii. Morehouse—west of US 165 (from Arkansas state line) to Bonita, north and west of LA 140 to junction of LA 830-4 (Cooper Lake Road), west of LA 830-4 to Bastrop, west of LA 139 to junction of LA 593, west and south of LA 593 to Collinston, west of LA 138 to junction of LA 134 and north of LA 134 to Ouachita Parish line at Wham Brake;

ix. Ouachita—all except south of US 80 and east of Ouachita River, east of LA 139 from Sicard to junction of LA 134, south of LA 134 to Morehouse Parish line at Wham Brake;

x. Rapides—all except north of Red River and east of US 165, south of LA 465 to junction of LA 121, west of LA 121 and LA 112 to Union Hill, and north of LA 113 from Union Hill to Vernon Parish line, and that portion south of Alexandria between Red River and US 167 to junction of US 167 with I-49 at Turkey Creek exit, east of I-49 southward to parish line;

xi. Vernon—north of LA 10 from the parish line westward to LA 113, south of LA 113 eastward to parish line. Also the portion north of LA 465 west of LA 117 from Kurthwood to Leesville and north of LA 8 from Leesville to Texas state line.

c. Still hunting only in all or portions of the following parishes:

i. Claiborne and Webster—Caney, Corney and Middlefork tracts of Kisatchie National Forest. (See Kisatchie National Forest Regulations);

ii. Ouachita—east of Ouachita River;

iii. Rapides—west of US 167 from Alexandria southward to I-49 at Turkey Creek Exit, west of I-49 southward to Parish Line, north of Parish Line westward to US 165, east of US 165 northward to US 167 at Alexandria. North of LA 465 from Vernon Parish line to LA 121, west of LA 121 to I-49, west of I-49 to LA 8, south and east of LA 8 to LA 118 (Mora Road), south and west of LA 118 to Natchitoches Parish line;

iv. Vernon—east of Mora-Hutton Road from Natchitoches Parish line to Hillman Loop Road, south and east of Hillman Loop Road to Comrade Road, south of Comrade Road to LA 465, east and north of LA 465 to Rapides Parish line.

3. Area 3

a. Portions of the following parishes are open:

i. Acadia—north of I-10;

ii. Allen—south of US 190 and west of LA 113;

iii. Beauregard—west of LA 113 and east of LA 27 from the parish line northward to DeRidder and north of US 190 westward from DeRidder to Texas state line;

iv. Calcasieu—east of LA 27 from Sulphur northward to the parish line, and north of I-10;

v. Jefferson Davis—north of I-10 and south of US 190;

vi. Lafayette—west of I-49 and north of I-10.

vii. Rapides—south of LA 465 to junction of LA 121, west of LA 121 and LA 112 to Union Hill and north of LA 113 from Union Hill to Vernon Parish line.

viii. St. Landry—west of US 167.

ix. Vernon—west and north of LA 113, south of LA 465, east of LA 117 from Kurthwood to Leesville, and south of LA 8 from Leesville to Texas state line.

4. Area 4

a. All of St. Helena and Washington Parishes are open.

b. Portions of the following parishes are also open:

i. East Baton Rouge—all except that portion north of I-110 and west of US 61;

ii. East Feliciana—east of US 61;

iii. West Feliciana—east of US 61;

iv. Livingston—north of I-12;

v. Tangipahoa—north of I-12;

vi. St. Tammany—all except that portion south of I-12, west of LA 1077 to LA 22, south of LA 22 to Tchefuncte River, west of Tchefuncte River southward to Lake Pontchartrain.

c. Still hunting only in all or portions of the following parishes:

i. East Feliciana and East Baton Rouge—east of Thompson Creek from the Mississippi state line to LA 10, north of LA 10 from Thompson Creek to LA 67 at Clinton, west of LA 67 from Clinton to Mississippi state line, south of Mississippi state line from LA 67 to Thompson Creek. Also that portion of East Baton Rouge Parish east of LA 67 from LA 64 north to Parish Line, south of Parish Line from LA 64 eastward to Amite River, west of Amite River southward to LA 64, north of LA 64 to LA 37 at Magnolia, east of LA 37 northward to LA 64 at Indian Mound, north of LA 64 from Indian Mound to LA 67. Also, that portion of East Feliciana Parish east of LA 67 from parish line north to LA 959, south of LA 959 east to LA 63, west of LA 63 to Amite River, west of Amite River southward to parish line, north of parish line westward to LA 67;

ii. St. Helena—north of LA 16 from Tickfaw River at Montpelier westward to LA 449, east and south of LA 449 from LA 16 at Pine Grove northward to Rohner Road, south of Rohner Road to LA 1045, south of LA 1045 to the Tickfaw River, west of the Tickfaw River from LA 1045 southward to LA 16 at Montpelier;

iii. Tangipahoa—that portion of Tangipahoa Parish north of LA 10 from the Tchefuncte River to LA 1061 at Wilmer, east of LA 1061 to LA 440 at Bolivar, south of LA 440 to the Tchefuncte River, west of the Tchefuncte River from LA 440 southward to LA 10;

iv. Washington and St. Tammany—east of LA 21 from the Mississippi state line southward to the Bogue Chitto River, north of the Bogue Chitto River from LA 21 eastward to the Pearl River Navigation Canal, east of the Pearl River Navigation Canal southward to the West Pearl River, north of the West Pearl River from the Pearl River Navigation Canal to Holmes Bayou, west of Holmes Bayou from the West Pearl River northward to the Pearl River, west of the Pearl River from Holmes Bayou northward to the Mississippi state line, south of the Mississippi state line from the Pearl River westward to LA 21. Also, that portion of Washington Parish west of LA 25 from the Mississippi state line southward to the Bogue Chitto River, then west of the Bogue Chitto River to its junction with the St. Tammany Parish line, north of the St. Tammany Parish line to the Tangipahoa Parish line, east of the Tangipahoa Parish line to the Mississippi state line, south of the Mississippi state line to its junction with LA 25;

v. West Feliciana—west of Thompson Creek to Illinois-Central Railroad, north of Illinois-Central Railroad to Parish Road #7, east of Parish Road #7 to the junction of US 61 and LA 966, east of LA 966 from US 61 to Chaney Creek, south of Chaney Creek to Thompson Creek.

5. Area 5

a. All of West Carroll Parish is open.

6. Area 6

a. All of Point Coupee Parish is open.

b. Portions of the following parishes are also open:

i. Avoyelles—all except that portion west of I-49;

ii. Evangeline—that portion east of I-49 to junction of LA 29, east of LA 29 south of I-49 to Ville Platte and north of US 167 east of Ville Platte;

iii. Lafayette—north of I-10 and east of I-49;

iv. Rapides—south of Alexandria between Red River and US 167 to the junction of US 167 with I-49 at Turkey Creek Exit, east of I-49 southward to parish line;

v. St. Landry—east of US 167;

vi. St.Martin—north of I-10;

vii. East Baton Rouge—north of I-110 and west of US 61;

xiii. West Feliciana—west of US 61;

ix. East Feliciana—west of US 61;

x. West Baton Rouge—north I-10.

c. Still hunting only in all or portions of the following parishes:

i. Avoyelles—north of LA 1 from Simmesport westward to LA 115 at Marksville, east of LA 115 from Marksville northward to the Red River near Moncla, south and west of the Red River to LA 1 at Simmesport;

ii. Rapides—south of Alexandria between Red River and US 167 to the junction of US 167 with I-49 at Turkey Creek Exit, east of I-49 southward to parish line;

iii. West Feliciana—west of Thompson Creek to Illinois-Central Railroad, north of Illinois-Central Railroad to Parish Road #7, east of Parish Road #7 to the junction of US 61 and LA 966, east of LA 966 from US 61 to Chaney Creek, south of Chaney Creek to Thompson Creek.

7. Area 7

a. Portions of the following parishes are open:

i. Iberia—south of LA 14 and west of US 90.

ii. St. Mary—all except that portion north of US 90 from Iberia Parish line eastward to Wax Lake Outlet, east of Wax Lake Outlet southward to Intracoastal Waterway, north of Intracoastal Waterway eastward to the Atchafalaya River, east of the Atchafalaya River southward to Bayou Shaffer, north of Bayou Shaffer to Bateman Lake, north and west of Bayou Chene from Bateman Lake to Lake Palourde.

8. Area 8

a. Portions of the following parishes are open:

i. Allen—that portion east of LA 113 from the parish line to US 190, north of US 190 eastward to Kinder, west of US 165 northward to LA 10 at Oakdale and south of LA 10 from Oakdale westward to parish line;

ii. Beauregard—that portion east of LA 113. Also that portion west of LA 27 from parish line northward to DeRidder, south of US 190 from DeRidder to Texas state line;

iii. Calcasieu—that portion west of LA 27 from the parish line southward to Sulphur and north of I-10 from Sulphur to the Texas state line;

iv. Vernon—that portion west of LA 113 from the parish line northward to Pitkin and south of LA 10 from Pitkin southward to the parish line.

9. Area 9

a. All of the following parishes are open: Ascension, Assumption, Jefferson, Lafourche, Orleans, Plaquemines, St. Bernard, St. Charles, St. James, St. John, Terrebonne

b. Portions of the following parishes are open:

i. Iberia—east of US 90;

ii. Iberville—south of I-10, west of the Atchafalaya Basin Protection levee, then south of Uppper Grand River to the Intracoastal Canal at Jack Miller, then south of Hwy 75;

iii. Lafayette—south of I-10 and east of US 90;

iv. Livingston—south of I-12;

v. St. Martin—south of I-10.

vi. St. Mary—north of US 90 from Iberia Parish line eastward to Wax Lake Outlet, east of Wax Lake Outlet southward to Intracoastal Waterway, north of Intracoastal Waterway eastward to the Atchafalaya River, east of the Atchafalaya River southward to Bayou Shaffer, north of Bayou Shaffer to Bateman Lake, north and west of Bayou Chene from Bateman Lake to Lake Palourde;

vii. St.Tammany—that portion south of I-12, west of LA 1077 to LA 22, south of LA 22 to Tchefuncte River, west of Tchefuncte River southward to Lake Pontchartrain;

viii. Tangipahoa—south of I-12;

ix. High Water Benchmark Closure. Deer hunting in those portions of Iberia, Iberville, St. Martin, and St. Mary parishes south of I-10, west of the East Guide Levee, east of the West Guide Levee, and north of US 90 will be closed when the river stage of the Atchafalaya River reaches 18 feet at Butte LaRose.

c. Still hunting only in all or portions of the following parishes:

i. Plaquemines—east of the Mississippi River;

ii. St. Bernard—all of the parish shall be still hunting only except that portion of St. Bernard known as the spoil area between the MRGO on the east and Access Canal on the west, south of Bayou Bienvenue and north of Bayou la Loutre;

iii. St. John—south of Pass Manchac from Lake Pontchartrain to US 51, east of US 51 from Pass Manchac to LA 638 (Frenier Beach Road). North of LA 638 from US 51 to Lake Pontchartrain, west of Lake Pontchartrain from LA 638 to Pass Manchac.

10. Area 10

a. All of Cameron and Vermillion Parishes are open.

b. Portions of the following parishes are open:

i. Acadia—south of I-10;

ii. Calcasieu—south of I-10;

iii. Iberia—west of US 90 and north of LA 14;

iv. Jefferson Davis—south of I-10;

v. Lafayette—south of I-10 and west of Hwy 90.

G. WMA Regulations

1. General

a. The following rules and regulations concerning the management, protection and harvest of wildlife have been officially approved and adopted by the Wildlife and Fisheries Commission in accordance with the authority provided in Louisiana Revised Statutes of 1950, Section 109 of Title 56. Failure to comply with these regulations will subject individual to citation and/or expulsion from the management area.

b. Citizens are cautioned that by entering a WMA managed by the LDWF they may be subjecting themselves and/or their vehicles to game and/or license checks, inspections and searches.

c. WMA seasons may be altered or closed anytime by the LDWF Secretary in emergency situations (floods, fire or other critical circumstances).

d. Hunters may enter the WMA no earlier than 4:00 a.m. unless otherwise specified. Hunters must check out and exit the WMA no later than two hours after sunset, or as otherwise specified.

e. Lands within WMA boundaries will have the same seasons and regulations pertaining to baiting and use of dogs as the WMA within which the lands are enclosed; however, with respect to private lands enclosed within a WMA, the owner or lessee may elect to hunt according to the regular season dates and hunting regulations applicable

to the geographic area in which the lands are located, provided that the lands are first enrolled in DMAP. Interested parties should contact the nearest LDWF region office for additional information.

f. Dumping garbage or trash on WMAs is prohibited. Garbage and trash may be properly disposed of in designated locations if provided.

g. Disorderly conduct or hunting under influence of alcoholic beverages, chemicals and other similar substances is prohibited.

h. Damage to or removal of trees, shrubs, hard mast (including but not limited acorn and pecans), wild plants, non-game wildlife (including reptiles and amphibians) or any species of butterflies, skippers or moths is prohibited without a permit from the LDWF. Gathering and/or removal of soft fruits, mushrooms and berries shall be limited to 5 gallons per person per day.

i. Burning of marshes is prohibited. Hunting actively burning marsh prohibited.

j. Nature trails. Trails shall be limited to pedestrians only. No vehicles, ATVs, horses, mules, bicycles, etc. allowed. Removal of vegetation (standing or down) or other natural material prohibited.

k. Deer seasons are for legal buck deer unless otherwise specified.

l. Small game, when listed under the WMA regulations may include both resident game animals and game birds as well as migratory species of birds.

m. Oysters may not be harvested from any WMA, except that oysters may be harvested from private oyster leases and state seed grounds located within a WMA, when authorized by the Wildlife and Fisheries Commission and upon approval by the Department of Health and Hospitals.

n. Free ranging livestock prohibited.

2. Permits

a. A WMA Hunting Permit is required for persons ages 18 through 59 to hunt on WMAs.

b. Self-Clearing Permits. A Self-Clearing Permit is required for all activities (hunting, fishing, hiking, birdwatching, sightseeing, etc.) on WMAs unless otherwise specified. The Self-Clearing Permit will consist of two portions: check in, check out. On WMAs where self-clearing permits are required, all persons must obtain a WMA self-clearing permit from an information station. The check in portion must be completed and put in a permit box before each day's activity on the day of the activity (except if hunting from a private camp adjacent to the WMA being hunted or if camping on the WMA, users need only to check in once during any 72 hour period). Users may check-in one day in advance of use. The check out portion must be carried by each person while on the WMA and must be completed and put in a permit box immediately upon exiting the WMA or within 72 hours after checking in if hunting from a private camp adjacent to the WMA being hunted or if camping on the WMA. No permit is required of fishers and boaters who do not travel on a WMA road and/or launch on the WMA as long as they do not get out of the boat and onto the WMA. When mandatory deer checks are specified on WMAs, hunters must check deer at a check station. (Self-clearing permits are not required for persons only traveling through the WMA provided that the most direct route is taken and no activities or stops take place.)

c. Persons using WMAs or other LDWF administered lands for any purpose must possess one of the following: a valid wild Louisiana stamp, a valid Louisiana fishing license, or a valid Louisiana hunting license. Persons younger than 16 or older than 60 years of age are exempt from this requirement. Also a Self-Clearing WMA permit, detailed above, may be required (available at most entrances to each WMA). Check individual WMA listings for exceptions.

3. Special Seasons

a. Youth Deer Hunt. Youths 17 or younger only. Youths must be accompanied by an adult 18 years of age or older. Youths must possess a hunter safety certification or proof of successful completion of a hunter safety course. If the accompanying adult is in possession of hunter safety certification, a valid hunting license or proof of successful completion of a hunter safety course, this requirement is waived for the youth. Adults may not possess a firearm. Youths may possess only one firearm while hunting. Legal firearms are the same as described for deer hunting. The supervising adult shall maintain visual and voice contact with the youth at all times, except properly licensed youths and youths 12 years old or older who have successfully completed a hunter safety course may hunt without a supervising adult. Contact the appropriate region office for maps of specific hunting areas. Either-sex deer may be taken on WMAs with youth hunts. Consult the regulations pamphlet for WMAs offering youth hunts.

NOTE: Some hunts may be by pre-application lottery.

b. Youth Squirrel Hunt (on selected WMAs only). Only youths 17 or younger may hunt. Squirrel, rabbit, raccoon, hogs and opossum may be taken. No dogs allowed. All other seasons will remain open to other hunters. Youths must possess a hunter safety certification or proof of successful completion of a hunter safety course. Youths must be accompanied by one adult 18 years of age or older. If the accompanying adult is in possession of hunter safety certification, a valid hunting license or proof of successful completion of a hunter safety course, this requirement is waived for the youth. Adults may not possess a firearm. Youths may possess only one firearm while hunting. The supervising adult shall maintain visual and voice contact with the youth at all times, except properly licensed youths and youths 12 years old or older who have successfully completed a hunter safety course may hunt without a supervising adult. Self-clearing permits are required. Consult the regulations pamphlet for WMAs offering youth squirrel hunts.

c. Youth Mourning Dove Hunt. A youth mourning dove hunt will be conducted on specific WMAs and will follow the same regulations provided for youth deer hunts on the first or second weekend of the mourning dove season (Saturday and/or Sunday only). Consult the regulations pamphlet for WMAs offering youth mourning dove hunts.

d. Physically Challenged Season. An either-sex deer season will be held for hunters possessing a physically challenged hunter permit on WMAs during the dates specified under the individual WMA. Participants must possess a physically challenged hunter permit. Contact region office for permit application and map of specific hunting area. Consult the regulations pamphlet for WMAs offering physically challenged seasons.

e. Turkey Lottery Hunts. Hunts restricted to those persons selected by lottery. Consult the regulations pamphlet for deadlines. All turkeys must be reported at self-clearing station. Contact region offices for more details. Consult separate turkey hunting regulations pamphlet for more details.

f. Waterfowl Lottery Hunts. Hunts restricted to those persons selected by lottery. Consult the regulations pamphlet for deadline. Consult regulations pamphlet for individual WMA schedules or contact any Wildlife Division Office for more details.

g. Mourning Dove Lottery Hunts. Consult regulations pamphlet for individual WMA schedules or contact any Wildlife Division Office for more details.

h. Trapping. Consult Annual Trapping Regulations for specific dates. All traps must be run daily. Traps with teeth are illegal. Hunter orange required when a deer gun season is in progress.

i. Raccoon Hunting. A licensed hunter may take raccoon or opossum, one per person per day, during daylight hours only, during the open rabbit season on WMAs.

Nighttime Experimental—all nighttime raccoon hunting where allowed is with dogs only. There is no bag limit. Self-clearing permit required.

j. Sport Fishing. Sport fishing, crawfishing and frogging are allowed on WMAs when in compliance with current laws and regulations except as otherwise specified under individual WMA listings.

4. Firearms

a. Firearms having live ammunition in the chamber, magazine, cylinder or clip when attached to firearms and crossbows cocked in the ready position are not allowed in or on vehicles, boats under power, motorcycles, ATVs, UTVs, ATCs or in camping areas on WMAs. Firearms may not be carried on any area before or after permitted hours except in authorized camping areas and except as may be permitted for authorized trappers.

b. Firearms and bows and arrows are not allowed on WMAs during closed seasons except on designated shooting ranges or as permitted for trapping and except as allowed pursuant to R.S. 56:109.C and R.S. 56:1691. Bows and broadhead arrows are not allowed on WMAs except during deer archery season, turkey season or as permitted for bowfishing. Active and retired law enforcement officers in compliance with POST requirements, Federal Law Enforcement Officers and holders of Louisiana concealed handgun permits or permit holders from a reciprocal state who are in compliance with all other state and federal firearms regulations may possess firearms on WMAs provided these firearms are not used for any hunting purpose.

c. Encased or broken down firearms and any game harvested may be transported through the areas by the most direct route provided that no other route exists EXCEPT as specified under WMA listing.

d. Loaded firearms are not allowed near WMA check stations.

e. Centerfire rifles and handguns larger than .22 caliber rimfire, shotgun slugs or shot larger than BB lead or F steel shot cannot be carried onto any WMA except during modern firearm deer season and during special shotgun season for feral hogs on Atchafalaya Delta, Pass-a-Loutre, Pointe-aux-Chenes and Salvador WMAs (consult regulations pamphlet for specific WMA regulations).

f. Target shooting and other forms of practice shooting are prohibited on WMAs EXCEPT as otherwise specified.

g. Discharging of firearms on or hunting from designated roads, ATV/UTV trails and their rights-of-way is prohibited during the modern firearm and muzzleloader deer season.

5. Methods of Taking Game

a. Moving deer or hogs on a WMA with organized drives and standers, drivers or making use of noises or noise-making devices is prohibited.

b. On WMAs the daily limit shall be one antlered deer and one antlerless deer (when legal) per day, not to exceed three antlered deer or four antlerless deer per season (all segments included) by all methods of take.

c. Baiting or hunting over bait is prohibited on all WMAs (hogs included).

d. Deer may not be skinned nor have any external body parts removed including but not limited to feet, legs, tail, head or ears before being checked out.

e. Deer hunting on WMAs is restricted to still hunting only.

f. Construction of and/or hunting from permanent tree stands or permanent blinds on WMAs is prohibited. Any permanent stand or permanent blind will be removed and destroyed. A permanent blind is any blind using non-natural materials or having a frame which is not dismantled within two hours after the end of legal shooting time each day. Blinds with frames of wood, plastic, metal poles, wire, mesh, webbing or other materials may be used but must be removed from the WMA within two hours after the end of legal shooting time each day. Blinds made solely of natural vegetation and not held together by nails or other metallic fasteners may be left in place but cannot be used to reserve hunting locations. Natural vegetation (including any material used as corner posts) is defined as natural branches that are 2 inches or less in diameter. All decoys must be removed from the WMA daily. Permanent tree stands are any stands that use nails, screws, spikes, etc., to attach to trees and are strictly prohibited. Portable deer stands (those that are designed to be routinely carried by one person) may not be left on WMAs unless the stands are removed from trees, placed flat on the ground, and left in a non-hunting position (a non-hunting position is one in which a hunter could not hunt from the stand in its present position). Also, all stands left must be legibly tagged with the user's name, address, phone number and LDWF i.d. number. No stand may be left on any WMA prior to the day before deer season opens on that WMA and all stands must be removed from the WMA within one day after the close of deer or hog hunting on that WMA. Free standing blinds must be disassembled when not in use. Stands left will not reserve hunting sites for the owner or user. All portable stands, blinds, tripods, etc., found unattended in a hunting position, not placed flat on the ground, or untagged will be confiscated and disposed of by the LDWF. LDWF is not responsible for unattended stands left on an area.

g. Physically Challenged Wheelchair Confined Deer and Waterfowl Hunting Areas: Special deer and waterfowl hunting areas, blinds and stands identified with

LDWF logos, have been established for physically challenged hunter permit (PCHP) wheelchair confined hunters on WMAs. Hunters must obtain a PCHP permit and are required to make reservations to use blinds and stands. PCHP wheelchair hunting areas are available on Alexander State Forest, Big Colewa Bayou, Buckhorn, Clear Creek, Elbow Slough, Floy McElroy, Jackson–Bienville, Ouachita, and Sherburne WMAs. Check WMA hunting schedules or call the LDWF Field Offices in Pineville, Lake Charles, Opelousas, Minden, Monroe or Hammond for information.

h. Hunting from utility poles, high tension power lines, oil and gas exploration facilities or platforms is prohibited.

i. It is illegal to save or reserve hunting locations using permanent stands or blinds. Stands or blinds attached to trees with screws, nails, spikes, etc. are illegal.

j. Tree climbing spurs, spikes or screw-in steps are prohibited.

k. Unattended decoys will be confiscated and forfeited to the LDWF and disposed of by the LDWF. This action is necessary to prevent preemption of hunting space.

l. Spot lighting (shining) from vehicles is prohibited on all WMAs.

m. Horses and mules may be ridden on WMAs except where prohibited and except during gun seasons for deer and turkey. Riding is restricted to designated roads and trails depicted on WMA map, self-clearing permit is required. Organized trail rides prohibited except allowed by permit only on Camp Beauregard. Hunting and trapping from horses and mules is prohibited except for quail hunting or as otherwise specified. Horse-drawn conveyances are prohibited.

n. All hunters (including archers and small game hunters) except waterfowl hunters and mourning dove hunters on WMAs must display 400 square inches of "hunter orange" and wear a "hunter orange" cap during open gun season for deer. Quail and woodcock hunters and hunters participating in special dog seasons for rabbit, squirrel and feral hogs are required to wear a minimum of a “hunter orange” cap. All other hunters and archers (while on the ground) except waterfowl hunters also must wear a minimum of a “hunter orange” cap during special dog seasons for rabbit and squirrel and feral hogs. Also all persons afield during hunting seasons are encouraged to display "hunter orange". Hunters participating in special shotgun season for feral hogs on Atchafalaya Delta, Pass-a-Loutre, Pointe-aux-Chenes and Salvador WMAs must display 400 square inches of hunter orange and wear a “hunter orange” cap.

o. Deer hunters hunting from concealed ground blinds must display a minimum of 400 square inches of “hunter orange” above or around their blinds which is visible from 360 degrees.

p. Archery season for deer. The archery season on WMAs is the same as outside and is open for either-sex deer except as otherwise specified on individual WMAs. Archery season restricted on Atchafalaya Delta and closed on certain WMAs when special seasons for youth or physically challenged hunts are in progress. Consult regulations pamphlet for specific seasons.

q. Either-sex deer may be taken on WMAs at any time during archery season except when bucks only seasons are in progress on the respective WMAs. Archers must abide by bucks only regulations and other restrictions when such seasons are in progress.

r. Primitive Firearms season for deer. Either-sex unless otherwise specified. See WMA deer schedule. Except youths 17 or younger may use any legal weapon during the primitive firearm season.

6. Camping

a. Camping on WMAs, including trailers, houseboats, recreational vehicles and tents, is allowed only in designated areas and for a period not to exceed 16 consecutive days, regardless if the camp is attended or unattended. Houseboats shall not impede navigation. At the end of the 16 day period, camps must be removed from the area for at least 48 hours. Camping area use limited exclusively to outdoor recreational activities.

b. Houseboats are prohibited from overnight mooring within WMAs EXCEPT on stream banks adjacent to LDWF-owned designated camping areas. Overnight mooring of vessels that provide lodging for hire are prohibited on WMAs. On Atchafalaya Delta WMA houseboats may be moored in specially designated areas throughout the hunting season. At all other times of the year, mooring is limited to a period not to exceed 16 consecutive days. Permits are required for the mooring of houseboats on Atchafalaya Delta WMAs. Permits must be obtained from the New Iberia office.

c. Discharge of human waste onto lands or waters of any WMA is strictly prohibited by state and federal law. In the event public restroom facilities are not available at a WMA, the following is required. Anyone camping on a WMA in a camper, trailer, or other unit (other than a houseboat or tent) shall have and shall utilize an operational disposal system attached to the unit. Tent campers shall have and shall utilize portable waste disposal units and shall remove all human waste from the WMA upon leaving. Houseboats moored on a WMA shall have a permit or letter of certification from the Health Unit (Department of Health and Hospitals) of the parish within which the WMA occurs verifying that it has an approved sewerage disposal system on board. Further, that system shall be utilized by occupants of the houseboats when on the WMA.

d. No refuse or garbage may be dumped from these boats.

e. Firearms may not be kept loaded or discharged in a camping area unless otherwise specified.

f. Campsites must be cleaned by occupants prior to leaving and all refuse placed in designated locations when provided or carried off by campers.

g. Trash must be contained at all times while camping.

h. No burning trash.

i. Non-compliance with camping regulations will subject occupant to immediate expulsion and/or citation, including restitution for damages.

j. Swimming is prohibited within 100 yards of boat launching ramps.

7. Restricted Areas

a. For your safety, all oil and gas production facilities (wells, pumping stations and storage facilities) are off limits.

b. No unauthorized entry or unauthorized hunting in restricted areas, refuges, or limited use areas unless otherwise specified.

8. Dogs. All use of dogs on WMAs, except for bird hunting and duck hunting, is experimental as required by law. Having or using dogs on any WMA is prohibited except for nighttime experimental raccoon hunting, squirrel hunting, rabbit hunting, bird hunting, duck hunting, hog hunting and bird dog training when allowed; see individual WMA season listings for WMAs that allow dogs. Dogs running at large are prohibited on WMAs. The owner or handler of said dogs shall be liable. Only recognizable breeds of bird dogs and retrievers are allowed for quail and migratory bird hunting. Only beagle hounds which do not exceed 15 inches at the front shoulders and which have recognizable characteristics of the breed may be used on WMAs having experimental rabbit seasons. A leashed dog may be used to trail and retrieve wounded or unrecovered deer during legal hunting hours. Any dog used to trail or retrieve wounded or unrecovered deer shall have on a collar with owner's name, address and phone number. In addition, a dog may be used to trail and retrieve unrecovered deer after legal hunting hours; however, no person accompanying a dog after legal hunting hours may carry a firearm of any sort.

9. Vehicles

a. An all-terrain vehicle is an off-road vehicle (not legal for highway use) with factory specifications not to exceed the following: weight-750 pounds, length-85", and width-48". ATV tires are restricted to those no larger than 25 x 12 with a maximum l" lug height and a maximum allowable tire pressure of 7 psi. as indicated on the tire by the manufacturer. Use of all other ATVs or ATV tires are prohibited on a WMA.

b. Utility Type Vehicle (UTV, also utility terrain vehicle) is defined as any recreational motor vehicle other than an ATV, not legal for highway use, designed for and capable of travel over designated unpaved roads, traveling on four or more low-pressure tires, with factory specifications not to exceed the following: weight-1900 pounds, length-128" and width-68". UTV tires are restricted to those no larger than 26 x 12 with a maximum 1" lug height and a maximum allowable tire pressure of 12 psi. UTV's are commonly referred to as side by sides and may include golf carts.

c. Vehicles having wheels with a wheel-tire combination radius of 17 inches or more measured from the center of the hub and horizontal to ground are prohibited.

d. The testing, racing, speeding or unusual maneuvering of any type of vehicle is prohibited within WMAs due to property damages resulting in high maintenance costs, disturbance of wildlife and destruction of forest reproduction.

e. Tractor or implement tires with farm tread designs Rl, R2 and R4 known commonly as spade or lug grip types are prohibited on all vehicles.

f. Airboats, aircraft, personal water craft, "mud crawling vessels" (commonly referred to as crawfish combines which use paddle wheels for locomotion) and hover craft are prohibited on all WMAs and Refuges. Personal water craft are defined as a vessel which uses an inboard motor powering a water jet pump as its primary source of propulsion and is designed to be operated by a person sitting, standing or kneeling on the vessel rather than in the conventional manner of sitting or standing inside the vessel. Personal water craft allowed on designated areas of Alexander State Forest WMA. Except, Type A personal water craft, model year 2003 and beyond, which are eight feet in length and greater, may be operated in the areas of Catahoula Lake, Manchac WMA, Maurepas Swamp WMA, Pearl River WMA and Pointe-aux-Chenes WMA from April 1 until the Monday of Labor Day weekend, from sunrise to sunset only. No person shall operate such water craft at a speed greater than slow/no wake within 100 feet of an anchored or moored vessel, shoreline, dock, pier, persons engaged in angling or any other manually powered vessel.

g. Driving or parking vehicles on food or cover plots and strips is prohibited.

h. Blocking the entrance to roads and trails is prohibited.

i. Licensed motorized vehicles (LMVs) legal for highway use, including motorcycles, are restricted entirely to designated roads as indicated on WMA maps. UTVs are restricted to marked UTV trails only. ATVs are restricted to marked ATV trails only, except when WMA roads are closed to LMVs, ATVs may then use those roads when allowed. WMA maps are available at all LDWF Field offices. This restriction does not apply to bicycles.

NOTE: Only ATV and UTV trails marked with signs and/or paint, and depicted on WMA maps are open for use.

j. Use of special ATV trails for physically challenged persons is restricted to ATV physically challenged permittees. Physically challenged ATV permittees are restricted to physically challenged ATV trails or other ATV trails only as indicated on WMA maps or as marked by sign and/or paint. Persons 60 years of age and older, with proof of age, are also allowed to use special physically challenged trails and need not obtain a permit. However, these persons must abide by all rules in place for these trails. Physically challenged persons under the age of 60 must apply for and obtain a physically challenged hunter program permit from the LDWF.

k. Entrances to ATV trails will be marked with peach colored paint. Entrances to physically challenged-only ATV trails will be marked with blue colored paint. Entrances to ATV trails that are open all year long will be marked with purple paint. The end of all ATV trails will be marked by red paint. WMA maps serve only as a general guide to the route of most ATV trails, therefore all signage and paint marking as previously described will be used to determine compliance. Deviation from this will constitute a violation of WMA rules and regulations.

l. Roads and trails may be closed due to poor condition, construction or wet weather.

m. ATVs, and motorcycles cannot be left overnight on WMAs except on designated camping areas. ATVs are prohibited from two hours after sunset to 4:00 AM, EXCEPT raccoon hunters may use ATVs during nighttime raccoon take seasons only. ATVs are prohibited from March 1 through August 31 except squirrel hunters are allowed to use

ATV trails during the spring squirrel season on the WMA and except certain trails may be open during this time period to provide access for fishing or other purposes and some ATV trails will be open all year long on certain WMAs.

n. Caution: Many LDWF-maintained roadways on WMAs are unimproved and substandard. A maximum 20 mph speed limit is recommended for all land vehicles using these roads, unless specific signage otherwise allows or restricts.

o. Hunters are allowed to retrieve their own downed deer and hogs with the aid of an ATV except on Thistlethwaite, Sherburne, Atchafalaya Delta, Pass-a-Loutre, Pointe-aux-Chenes, Salvador, Timken, Lake Bouef, and Biloxi WMAs under the following conditions:

i. no firearms or archery equipment is in possession of the retrieval party or on the ATV;

ii. the retrieval party may consist of no more than one ATV and one helper;

iii. ATVs may not be used to locate or search for wounded game or for any other purpose than retrieval of deer and hogs once they have been legally harvested and located;

iv. UTV's may not be used to retrieve downed deer or hogs.

10. Commercial Activities

a. Hunting Guides/Outfitters: No person or group may act as a hunting guide, outfitter or in any other capacity for which they are paid or promised to be paid directly or indirectly by any other individual or individuals for services rendered to any other person or persons hunting on any WMA, regardless of whether such payment is for guiding, outfitting, lodging or club memberships.

b. Except for licensed activities otherwise allowed by law, commercial activities are prohibited without a permit issued by the Secretary of the LDWF.

c. Commercial fishing. Permits are required of all commercial fishermen using Grassy Lake, Pomme de Terre and Spring Bayou WMAs. Gill nets or trammel nets and the take or possession of grass carp are prohibited on Spring Bayou WMA. Drag seines (except minnow and bait seines) are prohibited EXCEPT experimental bait seines allowed on Dewey Wills WMA north of LA 28 in Diversion Canal. Commercial fishing is prohibited during regular waterfowl seasons on Grand Bay, Silver Lake and Lower Sunk Lake on Three Rivers WMA. Commercial fishing is prohibited on Salvador/Timken, Ouachita and Pointe-aux-Chenes WMAs except commercial fishing on Pointe-aux-Chenes is allowed in Cut Off Canal and Wonder Lake. No commercial fishing activity shall impede navigation and no unattended vessels or barges will be allowed. Non-compliance with permit regulations will result in revocation of commercial fishing privileges for the period the license is issued and one year thereafter. Commercial fishing is allowed on Pass-a-Loutre and Atchafalaya Delta WMAs. See Pass-a-Loutre for additional commercial fishing regulations on mullet.

11. WMAs Basic Season Structure. For season dates, bag limits, shooting hours, special seasons and other information consult the annual regulations pamphlet for specific details.

12. Resident Small Game (squirrel, rabbit, quail, mourning dove, woodcock, snipe, rail and gallinule). Same as outside except closed during modern firearm either-sex deer seasons on certain WMAs (See WMA schedule) and except non-toxic shot must be used for rail, snipe, and gallinule. Consult regulations pamphlet. Unless otherwise specified under a specific WMA hunting schedule, the use of dogs for rabbit and squirrel hunting is prohibited. Spring squirrel season with or without dogs: 1st Saturday of May for 9 days. Consult regulations pamphlet for specific WMAs.

13. Waterfowl (ducks, geese and coots). Consult regulations pamphlet. Hunting after 2 p.m. prohibited on all WMAs except for Atchafalaya Delta, Attakapas, Biloxi, Lake Boeuf, Pass-a-Loutre, Pointe-aux-Chenes, and Salvador/Timken WMAs. Consult specific WMA regulations for shooting hours on these WMAs.

14. Archery. Consult regulations pamphlet.

15. Hogs. Feral hogs may be taken during any open hunting season, on WMAs by properly licensed and/or permitted hunters using only guns or bow and arrow legal for specified seasons in progress. Hogs may not be taken with the aid of dogs, except feral hogs may be taken with the aid of dogs during the month of February on Attakapas, Bodcau, Boeuf, Clear Creek, Dewey Wills, Jackson-Bienville, Little River, Pass a Loutre, Pearl River, Red River, Sabine, Sabine Island, Three Rivers, and West Bay WMAs by self-clearing permit. All hogs must be killed immediately and may not be transported live under any conditions, except as allowed by permit from either the Minden, Lake Charles, Monroe, Pineville, Hammond or Opelousas offices, and hunters may use centerfire pistols in addition to using guns allowed for season in progress. Additionally, feral hogs may be taken on Atchafalaya Delta, Pass-a-Loutre, Pointe-aux-Chenes and Salvador WMAs from February 16 through March 31 with shotguns loaded with buckshot or slugs or rimfire rifles no larger than .22 caliber. Additional requirements may be specified under individual WMAs, see regulation pamphlet.

a. Experimental trapping of feral hogs will be allowed by permit only on Boeuf, Clear Creek, Jackson-Bienville, Manchac, Pearl River, Red River, Sherburne, Thistlethwaite, Three Rivers, and West Bay WMAs. No live take will be allowed. Permit available through pre-application lottery. Contact LDWF Field Office.

16. Outlaw Quadrupeds and Birds. Consult regulations pamphlet. During hunting seasons specified on WMAs, except the turkey and spring squirrel seasons, take of outlaw quadrupeds and birds, with or without the use of electronic calls, is allowed by properly licensed hunters and only with guns or bows and arrows legal for season in progress on WMA. However, crows, blackbirds, grackles and cowbirds may not be taken before September 1 or after January 1. As described in 50 CFR Part 21, non-toxic shot must be used for the take of crows, blackbirds, cowbirds and grackles under the special depredation order. In addition an annual report has to be submitted to the U.S. Fish and Wildlife Service for those that participate in the take of these species.

17. WMAs Hunting Schedule and Regulations

a. Alexander State Forest. From December through February all hunters must check daily with the Office of Forestry for scheduled burning activity. No hunting or other activity will be permitted in burn units the day of the burning. Call 318-487-5172 or 318-487-5058 for information on burning schedules. Vehicles restricted to paved and graveled roads. No parking on or fishing or

swimming from bridges. No open fires except in recreation areas.

b. Atchafalaya Delta. Water control structures are not to be tampered with or altered by anyone other than employees of the LDWF at any time. All All Terrain vehicles, motorcycles, horses, and mules prohibited except as permitted for authorized WMA trappers. Mudboats or air-cooled propulsion engines powered by more than 36 total horsepower are prohibited on the WMA. Limited access area, no internal combustion engines allowed from September through January. See WMA map for specific locations.

c. Bayou Macon. All night activities prohibited except as otherwise provided.

d. Big Colewa Bayou. All nighttime activities prohibited.

e. Biloxi. All All Terrain Vehicles ATVs, UTVs, motorcycles, horses, and mules are prohibited. Mud Boats or air-cooled propulsion vessels powered by more than 36 total horsepower are prohibited on the WMA. All ATVs, UTVs, and motorcycles are prohibited.

f. Camp Beauregard. Daily military clearance required for all recreational users. Registration for use of self-clearing permit required once per year. All game harvested must be reported on self-clearing checkout permit. Retriever training allowed on selected portions of the WMA. Contact the LDWF Field Office for specific details. No hunting in restricted areas.

g. Dewey W. Wills. Crawfish: 100 pounds per person per day.

h. Elbow Slough. Steel shot only for all hunting. All motorized vehicles prohibited.

i. Elm Hall. No ATVs or UTVs allowed.

j. Fort Polk. Daily military clearance required to hunt or trap. Registration for use of self-clearing permit required once per year. New special regulations apply to ATV users.

k. Grassy Lake. Commercial Fishing: Permitted except on Smith Bay, Red River Bay and Grassy Lake proper on Saturday and Sunday and during waterfowl season. Permits available from area supervisor at Spring Bayou headquarters or Opelousas Field Office. No hunting in restricted area.

l. Joyce. Swamp Walk: No loaded firearms or hunting allowed within 100 yards of walkways.

m. Lake Boeuf. Hunting allowed until 12:00 noon on all game. All nighttime activities prohibited. All Terrain vehicles, motorcycles, horses, and mules are prohibited.

n. Lake Ramsay. Foot traffic only—all vehicles restricted to Parish Roads.

o. Manchac. Crabs: No crab traps allowed. Attended lift nets are allowed.

p. Maurepas Swamp. No loaded firearms or hunting allowed within 100 yards of Nature Trail.

q. Ouachita. Waterfowl Refuge: North of LA 15 closed to all hunting, fishing and trapping and ATV/UTV use during duck season including early teal season, except hunting allowed during Waterfowl Falconry Season. Crawfish: 100 pounds per person per day limit. Night crawfishing prohibited. No traps or nets left overnight. All nighttime activities prohibited except as otherwise provided.

r. Pass-a-Loutre. Commercial Fishing: Same as outside. Commercial mullet fishing open only in: South Pass, Pass-a-Loutre, North Pass, Southeast Pass, Northeast Pass, Dennis Pass, Johnson Pass, Loomis Pass, Cadro Pass, Wright Pass, Viveats Pass, Cognevich Pass, Blind Bay, Redfish Bay, Garden Island Bay, Northshore Bay, East Bay (west of barrier islands) and oil and gas canals as described on the LDWF Pass-a-Loutre WMA map. All ATVs, UTVs, motorcycles, horses, and mules prohibited on this area. Oyster harvesting is prohibited. Mudboats or air-cooled propulsion engines powered by more than 36 total horsepower are prohibited on the WMA. Limited access area, no internal combustion engines allowed from September through January. See WMA map for specific locations.

s. Pearl River. All roads closed 8 p.m. to 4:00 a.m. to all vehicles. Old Hwy. 11 will be closed when river gauge at Pearl River, Louisiana, reaches 16.5 feet. All hunting except waterfowl will be closed when the river stage at Pearl River reaches 16.5 feet. No hunting in the vicinity of Nature Trail. Observe "No Hunting" signs. Rifle range open Friday, Saturday and Sunday with a fee. Type A personal water craft, model year 2003 and beyond, which are eight feet in length and greater, may be operated in the areas of Pearl River Wildlife Management Area, south of U.S. 90 from April 1 until the Monday of Labor Day Weekend, from sunrise to sunset only. No person shall operate such water craft at a speed greater than slow/no wake within 100 feet of an anchored or moored vessel, shoreline, dock, pier, persons engaged in angling or any other manually powered vessel. Crawfish: 100 pounds per person per day.

t. Peason Ridge. Daily military clearance required to hunt or trap. Registration for use of self-clearing permit required once per year. Special federal regulations apply to ATV users.

u. Pointe-aux-Chenes. Hunting until 12 noon on all game, except for mourning dove hunting and youth lottery deer hunt as specified in regulation pamphlet. Point Farm: Gate will be open all weekends during month of February. No motorized vessels allowed in the drainage ditches. Recreational Fishing: Shrimp may be taken by the use of cast nets only. During the inside open shrimp season, 25 pounds per boat per day (heads on) maximum shall be allowed. Size count to conform with open season requirements. During the inside closed season, 10 pounds per boat per day (heads on) may be taken for bait. All castnet contents shall be contained and bycatch returned to the water immediately. Oyster harvesting is prohibited. Fish may be taken only by rod and reel or hand lines for recreational purposes only. Crabs may be taken only through the use of hand lines or nets; however, none are to remain set overnight. Twelve dozen crabs maximum are allowed per boat or vehicle per day. Crawfish may be harvested in unrestricted portions of the WMA and shall be limited to 100 pounds per person per day. Fishing gear used to catch crawfish shall not remain set overnight. The harvest of all fish, shrimp, crabs and crawfish are for recreational purposes only and any commercial use is prohibited. All boats powered by engines having total horsepower above 25 h.p. are not allowed in the Grand Bayou, Montegut and Pointe-aux-Chenes water management units. Public is permitted to

travel anytime through the WMA for access purposes only, in the waterways known as Grand Bayou, Humble Canal, Little Bayou Blue, Grand Bayou Blue, St. Louis Canal and Bayou Pointe-aux-Chenes unless authorized by the LDWF. All other motorized vehicles, horses and mules are prohibited unless authorized by the LDWF. Limited access area, no internal combustion engines allowed from September through January. See WMA map for specific locations. All ATVs, UTVs, motorcycles, horses, and mules prohibited.

v. Pomme de Terre. Commercial Fishing: permitted Monday through Friday, except closed during duck season. Commercial fishing permits available from area supervisor, Opelousas Field Office or Spring Bayou headquarters. Sport Fishing: Same as outside except allowed only after 2 p.m. only during waterfowl season. Crawfish: March 15 - July 31, recreational only, 100 lbs. per person per day.

w. Red River. Recreational Crawfishing: Yakey Farms only March 15-July 31. 100 pounds per person per day. No traps or nets left overnight. No motorized watercraft allowed.

x. Russell Sage. Transporting trash or garbage on WMA roads is prohibited. All nighttime activities prohibited except as otherwise provided. Internal combustion engines and craft limited to 10 h.p. rating or less in the Greentree Reservoirs.

NOTE: All season dates on Chauvin Tract (U.S. 165 North) same as outside, except still hunt only and except deer hunting restricted to archery only. All vehicles including ATVs prohibited.

y. Sabine Island. Sabine Island boundaries are Sabine River on the west, Cut-Off Bayou on the north, and Old River and Big Bayou on the south and east.

z. Salvador/Timken. Hunting until 12 noon only for waterfowl. Recreational Fishing: Shrimp may be taken by the use of cast nets only. During the inside open shrimp season, 25 pounds per boat per day (heads on) maximum shall be permitted. Size count to conform with open season requirements. During the inside closed season, 10 pounds per boat per day (heads on) maximum may be taken for bait. All castnet contents shall be contained and bycatch returned to the water immediately. Fish may be taken only by rod and reel or hand lines for recreational purposes only. Crabs may be taken only through the use of hand lines or nets; however, none of the lines are to remain set overnight. Twelve dozen crabs maximum are allowed per boat or vehicle per day. Crawfish may be harvested in unrestricted portions of the WMA and shall be limited to 100 pounds per person per day. Fishing gear used to catch crawfish shall not remain set overnight. The harvest of all fish, shrimp, crabs and crawfish are for recreational purposes only and any commercial use is prohibited. Use of mudboats powered by internal combustion engines with more than four cylinders is prohibited. Pulling boats over levees, dams or water control structures or any other activities which cause detriment to the integrity of levees, dams and water control structures is prohibited. Limited access area, no internal combustion engines allowed from September through January. See WMA map for specific locations.

aa. Sandy Hollow. Bird Dog Training: Consult regulation pamphlet. Wild birds only (use of pen-raised birds prohibited). Bird Dog Field Trials: Permit required from Hammond Field Office. Horseback Riding: Self-Clearing Permit required. Organized trail rides prohibited. Riding allowed only on designated roads and trails depicted on WMA map. Horses and mules are specifically prohibited during turkey and gun season for deer except as allowed for bird dog field trials. No horses and mules on green planted areas. Horse-drawn conveyances are prohibited.

bb. Sherburne. Crawfishing: Recreational crawfishing only on the South Farm Complexes. Crawfish harvest limited to 100 pounds per person per day. No traps or nets left overnight. No motorized watercraft allowed on farm complexes. Retriever training allowed on selected portions of the WMA. Contact the Opelousas Field Office for specific details. Vehicular traffic prohibited on Atchafalaya River levee within Sherburne WMA boundaries. Rifle and Pistol Ranges open daily. Skeet ranges open by appointment only, contact Hunter Education Office. No trespassing in restricted area behind ranges. Note: Atchafalaya National Wildlife Refuge, and U.S. Army Corps of Engineers land holdings adjacent to the Sherburne WMA will have the same rules and regulations as Sherburne WMA. No hunting or trapping in restricted area.

cc. Soda Lake. No motorized vehicles allowed. Bicycles allowed. All trapping and hunting prohibited except archery hunting for deer and falconry.

dd. Spring Bayou. Commercial Fishing: permitted Monday through Friday except slat traps and hoop nets permitted any day and except gill or trammel nets or the take or possession of grass carp are prohibited. Permits available from area supervisor or Opelousas Field Office. Closed until after 2 p.m. during waterfowl season. Sport Fishing: Same as outside except allowed only after 2 p.m. during waterfowl season. Crawfish: recreational only, limit 100 pounds per person per day. No hunting allowed in headquarters area. Only overnight campers allowed in the improved Boggy Bayou Camping area. Rules and regulations posted at camp site. A fee is assessed for use of this campsite. Water skiing allowed only in Old River and Grand Lac.

ee. Tangipahoa Parish School Board. No horseback riding during gun season for deer or turkey. ATVs/UTVs are not allowed except as otherwise specified.

ff. Thistlethwaite. All motorized vehicles restricted to improved roads only. All users must enter and leave through main gate only.

gg. Tunica Hills. Camping limited to tents only in designated area.

hh. Union. All nighttime activities prohibited except as otherwise provided.

AUTHORITY NOTE: Promulgated in accordance with R.S. 56:115 and R.S. 56:116.

HISTORICAL NOTE: Promulgated by the Department of Wildlife and Fisheries, Wildlife and Fisheries Commission, LR 25:1279 (July 1999), amended LR 26:1494 (July 2000), LR 27:1049 (July 2001), LR 28:1603 (July 2002), LR 29:1124 (July 2003), repromulgated LR 29:1522 (August 2003), amended LR 30:1495 (July 2004), LR 31:1611 (July 2005), LR 32:1251 (July 2006), LR 33:1382 (July 2007), LR 34:1429 (July 2008), LR 35:1264 (July 2009), LR 36:1566 (July 2010), LR 37:2190 (July 2011), LR 38:1732 (July 2012), LR 39:

Family Impact Statement

In accordance with Act 1183 of the 1999 regular session of the Louisiana Legislature, the Department of Wildlife and Fisheries/Wildlife and Fisheries Commission hereby issues its Family Impact Statement in connection with the

preceding Notice of Intent: This Notice of Intent will have no impact on the six criteria set out at R.S. 49:972(B).

1. The stability of the family? The proposed Rule is not anticipated to have any effect on the stability of the family.

2. The authority and rights of parents regarding the education and supervision of their children? The proposed Rule is not anticipated to have any effect on the authority and rights of parents regarding the education and supervision of their children.

3. The functioning of the family? The proposed Rule is not anticipated to have any effect on the functioning of the family.

4. Family earnings and family budget? The proposed Rule is not anticipated to have any effect on family earnings and family budget.

5. The behavior and personal responsibility of children? The proposed Rule is not anticipated to have any effect on the behavior and personal responsibility of children.

6. The ability of the family or a local government to perform the function as contained in this proposed rule? The proposed Rule is not anticipated to have any effect on the ability of the family or a local government to perform the function as contained in this proposed rule.

Poverty Impact Statement

The proposed rulemaking will have no impact on poverty as described in R.S. 49:973.

Public Comments

Interested persons may submit written comments relative to the proposed Rule until 4:30 p.m., Thursday, May 2, 2013 to Steve Smith, Wildlife Division, Department of Wildlife and Fisheries, Box 98000, Baton Rouge, LA, 70898-9000, or via email to ssmith@wlf.la.gov.

Public Hearing

Public hearings will be held at the following locations: March 19 beginning at 6 p.m., at LDWF Minden Office, 9961 Highway 80, Minden; March 19 beginning at 6 p.m., at the St. Tammany Parish Council Chambers, 21490 Koop Drive, Mandeville; March 20 beginning at 6 p.m., LDWF Monroe Office, 368 Centurytel Drive, Monroe; March 20 beginning at 6 p.m., Chalmette Elementary School Resource Center, 75 East Chalmette Circle, Chalmette; March 21 beginning at 6 p.m., USGS National Wetlands Research Center, 700 Cajundome Boulevard, Lafayette; March 26 beginning at 6:30 p.m., LSU Ag Center (next to Burton Coliseum), 7101 Gulf Highway, Lake Charles; March 27 beginning at 6 p.m., Alexandria Convention Hall, 915 3rd Street, Alexandria; March 27 beginning at 6 p.m., Houma Municipal Auditorium, 880 Verret St., Houma; March 28 beginning at 6 p.m., Waddill Outdoor Education Center, 4142 North Flannery Road, Baton Rouge. Also comments will be accepted at regularly scheduled Wildlife and Fisheries Commission Meetings from March through May.

The secretary of the Department of Wildlife and Fisheries is authorized to take any and all necessary steps on behalf of the commission to promulgate and effectuate this Notice of Intent and the final Rule, including but not limited to, the filing of the fiscal and economic impact statements, the filing of the Notice of Intent and final Rule and the preparation of reports and correspondence to other agencies of government.

Ronald Graham
Chairman

FISCAL AND ECONOMIC IMPACT STATEMENT FOR ADMINISTRATIVE RULES
RULE TITLE: General and Wildlife Management Area Hunting Rules and Regulations

I. ESTIMATED IMPLEMENTATION COSTS (SAVINGS) TO STATE OR LOCAL GOVERNMENT UNITS (Summary)

The proposed rule change will have no anticipated implementation costs to state or local governmental units. The Louisiana Department of Wildlife and Fisheries establishes dates and general regulations for hunting game birds and quadrupeds on Wildlife Management Areas annually. It also sets dates for public hearings to allow the change for Wildlife and Fisheries personnel to obtain public comment on the proposed changes to hunting regulations, seasons and policies, while also offering the public a chance to make comments and/or suggestions about future regulatory changes, season structures and policies.

II. ESTIMATED EFFECT ON REVENUE COLLECTIONS OF STATE OR LOCAL GOVERNMENTAL UNITS (Summary)

The proposed rule change is expected to have no effect on revenue collections of state or local governmental units.

III. ESTIMATED COSTS AND/OR ECONOMIC BENEFITS TO DIRECTLY AFFECTED PERSONS OR NONGOVERNMENTAL GROUPS (Summary)

A minimal number of hunters may be directly affected by the proposed hunting rule changes. The proposed rule change impacts hunting rules and regulations for the state at large as well as for wildlife management areas. The proposed rule change includes a variety of modifications to area descriptions and special regulations on state operated wildlife management areas, which will likely have a minor impact.

However, the proposed rule change also includes changes in the allowable recreational harvest of crawfish on Pointe aux Chenes, Pomme de Terre, Pearl River, Red River, Sherburne, and Salvador Wildlife Management Areas to make them consistent with current regulations for the allowable recreational harvest of crawfish on all other wildlife management areas. The proposed rule would increase the allowable recreational catch on these wildlife management areas from 100 pounds of crawfish per boat per day to 100 pounds of crawfish per person per day. This will create additional benefits to anglers who harvest crawfish recreationally in these areas.

IV. ESTIMATED EFFECT ON COMPETITION AND EMPLOYMENT (Summary)

The proposed rule change is expected to have no effect on competition or employment.

Lois Azzarello
Undersecretary
1302#045

Evan Brasseaux
Staff Director
Legislative Fiscal Office

NOTICE OF INTENT

Department of Wildlife and Fisheries
Wildlife and Fisheries Commission

Resident Game Hunting Season (LAC 76:XIX.101 and 103)

The Wildlife and Fisheries Commission does hereby give notice of its intent to promulgate hunting seasons for resident game birds and game quadrupeds.

Title 76
WILDLIFE AND FISHERIES
Part XIX. Hunting and WMA Regulations
Chapter 1. Resident Game Hunting Season

§101. General

A. the resident game hunting season regulations are hereby adopted by the Wildlife and Fisheries Commission. A complete copy of the regulation pamphlet may be obtained from the department.

AUTHORITY NOTE: Promulgated in accordance with R.S. 56:115.

HISTORICAL NOTE: Promulgated by the Department of Wildlife and Fisheries, Wildlife and Fisheries Commission, LR 21:707 (July 1995), amended LR 22:585 (July 1996), LR 23:871 (July 1997), LR 24:1324 (July 1998), LR 25:1290 (July 1999), LR 26:1506 (July 2000), LR 27:1061 (July 2001), LR 28:1615 (July 2002), LR 29:1122 (July 2003), LR 30:1493 (July 2004), LR 31:1627 (July 2005), LR 32:1253 (July 2006), LR 33:1399 (July 2007), LR 34:1447 (July 2008), LR 35:1278 (July 2009), LR 36:1580 (July 2010), LR 37:2206 (July 2011), LR 38:1747 (July 2012), LR 39:

§103. Resident Game Birds and Animals

A. Shooting Hours—one-half hour before sunrise to one-half hour after sunset.

B. Consult regulation pamphlet for seasons or specific regulations on wildlife management areas or specific localities.

Species	Season Dates	Daily Bag Limit	Possession Limit
Quail	OPENS: 3rd Saturday of November CLOSES: Last Day of February	10	20
Rabbit and Squirrel	OPENS: 1st Saturday of October CLOSES: Last Day of February	8	16
Squirrel*	OPENS: 1st Saturday of May for 23 days	3	6
Deer 2013-14	See Schedule	1 antlered and 1 antlerless (when legal)	6/season (not to exceed 3 antlered deer or 4 antlerless deer)
Deer 2014-15	See Schedule	1 antlered and 1 antlerless (when legal)	6/season (not to exceed 3 antlered deer or 4 antlerless deer)

*NOTE: Spring squirrel season is closed on the Kisatchie National Forest, National Wildlife Refuges, U.S. Army Corps of Engineers property. Some state wildlife management areas will be open, check WMA season schedule.

C. Deer Hunting Schedule—2013-2014

Area	Archery	Primitive Firearms (All Either Sex Except as Noted)	Still Hunt (No dogs allowed)	With or Without Dogs
1	OPENS: 1st day of Oct. CLOSES: Last day of Jan.	OPENS: 2nd Sat. of Nov. CLOSES: Fri. after 2nd Sat. of Nov. OPENS: Mon. after the next to last Sun. of Jan. CLOSES: Last day of Jan.	OPENS: Sat. before Thanksgiving Day EXCEPT when there are 5 Sats. in Nov., then it will open on the 3rd Sat. of Nov. CLOSES: Fri. before 2nd Sat. of Dec. EXCEPT when there are 5 Sats. in Nov. and then it will close on the Fri. before the 1st Sat. of Dec. OPENS: Mon. after 1st Sat. of Jan. CLOSES: next to last Sun. of Jan.	OPENS: 2nd Sat. of Dec. EXCEPT when there are 5 Sats. in Nov., then it will open on the 1st Sat. of Dec. CLOSES: Sun. after 1st Sat. of Jan.
2	OPENS: 1st day of Oct. CLOSES: Last day of Jan.	OPENS: Next to last Sat. of Oct. CLOSES: Fri. before last Sat. of Oct. OPENS: Mon. after the last day of Modern Firearm Season in Jan. CLOSES: After 7 days.	OPENS: Last Sat. of Oct. CLOSES: Tues. before 2nd Sat. of Dec. in odd numbered years and on Wed. during even numbered years EXCEPT when there are 5 Sats. in Nov. and then it will close on the Tues. in odd numbered years or Wed. during even numbered years before the 1st Sat. of Dec.	OPENS: Wed. before the 2nd Sat. of Dec. in odd numbered years and on Thurs. during even numbered years EXCEPT when there are 5 Sats. in Nov., then it will open on the Wed. before the 1st Sat. of Dec. on odd years and Thurs. during even numbered years CLOSES: 40 days after opening in odd numbered years or 39 days after opening in even numbered years

Area	Archery	Primitive Firearms (All Either Sex Except as Noted)	Still Hunt (No dogs allowed)	With or Without Dogs
3	OPENS: 3rd Sat. of Sept. CLOSES: Jan. 15	OPENS: 2nd Sat. of Oct. CLOSES: Fri. before 3rd Sat. of Oct. OPENS: Mon. after Thanksgiving Day CLOSES: Fri. before 1st Sat. of Dec.	OPENS: 3rd Sat. of Oct. CLOSES: Sun. after Thanksgiving Day OPENS: 1st Sat. of Dec. CLOSES: After 37 days	
4	OPENS: 1st day of Oct. CLOSES: Last day of Jan.	OPENS: 2nd Sat. of Nov. CLOSES: Fri. after 2nd Sat. of Nov.(EITHER SEX) OPENS: Mon. after the next to last Sun. of Jan. CLOSES: Last day of Jan. (EITHER SEX FOR 1ST 7 DAYS, BUCKS ONLY FOR REMAINDER OF SEASON)	OPENS: Sat. before Thanksgiving Day EXCEPT when there are 5 Sats. in Nov., then it will open on the 3rd Sat. of Nov. CLOSES: Fri. before 2nd Sat. of Dec. EXCEPT when there are 5 Sats. in Nov. and then it will close on the Fri. before the 1st Sat. of Dec. (BUCKS ONLY UNLESS EITHER SEX SEASON IS IN PROGRESS) OPENS: Mon. after 1st Sat. of Jan. CLOSES: next to last Sun. of Jan. (BUCKS ONLY UNLESS EITHER SEX SEASON IS IN PROGRESS) OPENS: 3rd Sat. of Nov. CLOSES: Sun. after 3rd Sat.of Nov. (EITHER SEX) OPENS: Friday after Thanksgiving CLOSES: Sun. after Thanksgiving. (EITHER SEX) OPENS: 1st Sat. of Dec. CLOSES: Sun. after 1st Sat. of Dec. (EITHER SEX) OPENS: 2nd Sat. of Jan. CLOSES: Sun. after 2nd Sat. of Jan. (EITHER SEX) OPENS: 3rd Sat. of Jan. CLOSES: Sun. after 3rd Sat. of Jan. (EITHER SEX)	OPENS: 2nd Sat. of Dec. EXCEPT when there are 5 Sats. in Nov., then it will open on the 1st Sat. of Dec. CLOSES: Sun. after 1st Sat. of Jan. (BUCKS ONLY UNLESS EITHER SEX SEASON IS IN PROGRESS) OPENS: 2nd Sat. of Dec. CLOSES: Sun. after 2nd Sat. of Dec. (EITHER SEX) OPENS: 3rd Sat. of Dec. CLOSES: Sun. after 3rd Sat. of Dec. (EITHER SEX) OPENS: 4th Sat. of Dec. CLOSES:Sun. after 4th Sat. of Dec. (EITHER SEX) OPENS: 1st Sat. of Jan. CLOSES: Sun. after 1st Sat. of Jan. (EITHER SEX)
5	OPENS: 1st day of Oct. CLOSES: Last day of Jan.	OPENS: 2nd Sat. of Nov. CLOSES: Fri. before 3rd Sat. of Nov. (EITHER SEX) OPENS: Day after the close of Modern Firearm Season CLOSES: After 7 consecutive days (EITHER SEX)	OPENS: Day after Thanksgiving Day CLOSES: 4th Sun. of Dec.-(BUCKS ONLY)	
6	OPENS: 1st day of Oct. CLOSES: Feb. 15 (1st 15 days are BUCKS ONLY)	OPENS: 2nd Sat. of Nov. CLOSES: Fri. before 3rd Sat. of Nov. OPENS: Mon. after the next to last Sun. of Jan. CLOSES: Last day of Jan.	OPENS: Sat. before Thanksgiving Day EXCEPT when there are 5 Sats. in Nov., then it will open on the 3rd Sat. of Nov. CLOSES: Fri. before 2nd Sat. of Dec. EXCEPT when there are 5 Sats. in Nov. and then it will close on the Fri. before the 1st Sat. of Dec.	OPENS: 2nd Sat. of Dec. EXCEPT when there are 5 Sats. in Nov., then it will open on the 1st Sat. of Dec. CLOSES: Next to last Sun. of Jan.
7	OPENS: 1st day of Oct. CLOSES: Last day of Jan.	OPENS: 2nd Sat. of Oct. CLOSES: Fri. before 3rd Sat. of Oct.(EITHER SEX) OPENS: 1st Sat. of Nov. CLOSES: Fri. before 2nd Sat. of Nov. (BUCKS ONLY).	OPENS: 3rd Sat. of Oct. CLOSES: Sun. after 3rd Sat. of Oct. (EITHER SEX) OPENS: Mon. after 3rd Sun. of Oct. CLOSES: Fri Before 1st Sat. of Nov.(BUCKS ONLY) OPENS: 3rd Sat. of Nov. CLOSES: Sun. after 3rd Sat. of Nov. (EITHER SEX) OPENS: Fri. after Thanksgiving. CLOSES: Sun. after Thanksgiving. (EITHER SEX)	OPENS: Mon. after Thanksgiving Day CLOSES: After 35 days(BUCKS ONLY UNLESS EITHER SEX SEASON IS IN PROGRESS) OPENS: Sat. after Christmas. CLOSES: Sun. after Christmas. (EITHER SEX)

Area	Archery	Primitive Firearms (All Either Sex Except as Noted)	Still Hunt (No dogs allowed)	With or Without Dogs
8	OPENS: 3rd Sat. of Sept. CLOSES: Jan. 15	OPENS: 2nd Sat. of Oct. CLOSES: Fri. before 3rd Sat. of Oct. OPENS: Mon. after Thanksgiving Day CLOSES: Fri. before 1st Sat. of Dec.	OPENS: 3rd Sat. of Oct. CLOSES: Sun. after Thanksgiving Day.	OPENS: 1st Sat. of Dec. CLOSES: After 37 days.
9	OPENS: 1st day of Oct. CLOSES: Feb. 15 (1st 15 days are BUCKS ONLY)	OPENS: 2nd Sat. of Nov. CLOSES: Fri. before 3rd Sat. of Nov.(BUCKS ONLY) OPENS: Mon. after the next to last Sun. of Jan. CLOSES: Last day of Jan.(EITHER SEX 1ST 7 DAYS, BUCKS ONLY FOR REMAINDER OF SEASON)	OPENS: Sat. before Thanksgiving Day EXCEPT when there are 5 Sats. in Nov., then it will open on the 3rd Sat. of Nov. CLOSES: Fri. before 2nd Sat. of Dec. EXCEPT when there are 5 Sats. in Nov. and then it will close on the Fri. before the 1st Sat. of Dec. (BUCKS ONLY UNLESS EITHER SEX SEASON IS IN PROGRESS) OPENS: Fri. after Thanksgiving Day. CLOSES: Sun. after Thanksgiving day. (EITHER SEX)	OPENS: 2nd Sat. of Dec. EXCEPT when there are 5 Sats. in Nov., then it will open on the 1st Sat. of Dec. CLOSES: Next to last Sun. of Jan. (BUCKS ONLY UNLESS EITHER SEX SEASON IS IN PROGRESS) OPENS: 2nd Sat. of Dec. CLOSES: Sun. after 2nd Sat. of Dec. (EITHER SEX) OPENS: Sat. after Christmas. CLOSES: Sun. after Christmas. (EITHER SEX) OPENS: 2nd Sat. in Jan. CLOSES: Sun. after 2nd Sat. in Jan. (EITHER SEX)
10	OPENS: 3rd Sat. of Sept. CLOSES: Jan. 15	OPENS: 2nd Sat. of Oct. CLOSES: Fri. before 3rd Sat. of Oct. (EITHER SEX) OPENS: Mon. after Thanksgiving Day CLOSES: Fri. before 1st Sat. of Dec. (BUCKS ONLY)	OPENS: 3rd Sat. of Oct. CLOSES: Sun. after Thanksgiving Day(BUCKS ONLY UNLESS EITHER SEX SEASON IS IN PROGRESS) OPENS: 1st Sat. of Dec. CLOSES: After 37 days(BUCKS ONLY UNLESS EITHER SEX SEASON IS IN PROGRESS) OPENS: 3rd Sat. of Oct. CLOSES: Sun. after 3rd Sat. in Oct. (EITHER SEX) OPENS: 2nd Sat. of Nov. CLOSES: Sun. after 2nd Sat. of Nov. (EITHER SEX) OPENS: Fri. after Thanksgiving. CLOSES: Sun. after Thanksgiving. (EITHER SEX) OPENS: Sat. after Christmas. CLOSES: Sun. after Christmas. (EITHER SEX)	

D. Modern Firearm Schedule—2013-2014 (either sex seasons)

Parish	Area	Modern Firearm Either-sex Days
West Carroll	Area 5	Opens Friday after Thanksgiving Day for 3 days.

E. Deer Hunting Schedule 2014-2015

Area	Archery	Primitive Firearms (All Either Sex Except as Noted)	Still Hunt (No dogs allowed)	With or Without Dogs
1	OPENS: 1st day of Oct. CLOSES: Last day of Jan.	OPENS: 2nd Sat. of Nov. CLOSES: Fri. after 2nd Sat. of Nov. OPENS: Mon. after the next to last Sun. of Jan. CLOSES: Last day of Jan.	OPENS: Sat. before Thanksgiving Day EXCEPT when there are 5 Sats. in Nov., then it will open on the 3rd Sat. of Nov. CLOSES: Fri. before 2nd Sat. of Dec. EXCEPT when there are 5 Sats. in Nov. and then it will close on the Fri. before the 1st Sat. of Dec. OPENS: Mon. after 1st Sat. of Jan. CLOSES: next to last Sun. of Jan.	OPENS: 2nd Sat. of Dec. EXCEPT when there are 5 Sats. in Nov., then it will open on the 1st Sat. of Dec. CLOSES: Sun. after 1st Sat. of Jan.
2	OPENS: 1st day of Oct. CLOSES: Last day of Jan.	OPENS: Next to last Sat. of Oct. CLOSES: Fri. before last Sat. of Oct. OPENS: Mon. after the last day of Modern Firearm Season in Jan. CLOSES: After 7 days.	OPENS: Last Sat. of Oct. CLOSES: Tues. before 2nd Sat. of Dec. in odd numbered years and on Wed. during even numbered years EXCEPT when there are 5 Sats. in Nov. and then it will close on the Tues. in odd numbered years or Wed. during even numbered years before the 1st Sat. of Dec.	OPENS: Wed. before the 2nd Sat. of Dec. in odd numbered years and on Thurs. during even numbered years EXCEPT when there are 5 Sats. in Nov., then it will open on the Wed. before the 1st Sat. of Dec. on odd years and Thurs. during even numbered years CLOSES: 40 days after opening in odd numbered years or 39 days after opening in even numbered years
3	OPENS: 3rd Sat. of Sept. CLOSES: Jan. 15	OPENS: 2nd Sat. of Oct. CLOSES: Fri. before 3rd Sat. of Oct. OPENS: Mon. after Thanksgiving Day CLOSES: Fri. before 1st Sat. of Dec.	OPENS: 3rd Sat. of Oct. CLOSES: Sun. after Thanksgiving Day OPENS: 1st Sat. of Dec. CLOSES: After 37 days	
4	OPENS: 1st day of Oct. CLOSES: Last day of Jan.	OPENS: 2nd Sat. of Nov. CLOSES: Fri. after 2nd Sat. of Nov. OPENS: Mon. after the next to last Sun. of Jan. CLOSES: Last day of Jan. (EITHER SEX FOR 1ST 7 DAYS, BUCKS ONLY FOR REMAINDER OF SEASON)	OPENS: Sat. before Thanksgiving Day EXCEPT when there are 5 Sats. in Nov., then it will open on the 3rd Sat. of Nov. CLOSES: Fri. before 2nd Sat. of Dec. EXCEPT when there are 5 Sats. in Nov. and then it will close on the Fri. before the 1st Sat. of Dec. (BUCKS ONLY UNLESS EITHER SEX SEASON IS IN PROGRESS) OPENS: Mon. after 1st Sat. of Jan. CLOSES: next to last Sun. of Jan. (BUCKS ONLY UNLESS EITHER SEX SEASON IS IN PROGRESS) OPENS: 3rd Sat. of Nov. CLOSES: Sun. after 3rd Sat. of Nov. (EITHER SEX) OPENS: Friday after Thanksgiving CLOSES: Sun. after Thanksgiving. (EITHER SEX) OPENS: 1st Sat. of Dec. CLOSES: Sun. after 1st Sat. of Dec. (EITHER SEX) OPENS: 2nd Sat. of Jan. CLOSES: Sun. after 2nd Sat. of Jan. (EITHER SEX) OPENS: 3rd Sat. of Jan. CLOSES: Sun. after 3rd Sat. of Jan. (EITHER SEX)	OPENS: 2nd Sat. of Dec. EXCEPT when there are 5 Sats. in Nov., then it will open on the 1st Sat. of Dec. CLOSES: Sun. after 1st Sat. of Jan. (BUCKS ONLY UNLESS EITHER SEX SEASON IS IN PROGRESS) OPENS: 2nd Sat. of Dec. CLOSES: Sun. after 2nd Sat. of Dec. (EITHER SEX) OPENS: 3rd Sat. of Dec. CLOSES: Sun. after 3rd Sat. of Dec. (EITHER SEX) OPENS: 4th Sat. of Dec. CLOSES: Sun. after 4th Sat. of Dec. (EITHER SEX) OPENS: 1st Sat. of Jan. CLOSES: Sun. after 1st Sat. of Jan. (EITHER SEX)

Area	Archery	Primitive Firearms (All Either Sex Except as Noted)	Still Hunt (No dogs allowed)	With or Without Dogs
5	OPENS: 1st day of Oct. CLOSES: Last day of Jan.	OPENS: 2nd Sat. of Nov. CLOSES: Fri. before 3rd Sat. of Nov. (EITHER SEX) OPENS: Day after the close of Modern Firearm Season CLOSES: After 7 consecutive days (EITHER SEX)	OPENS: Day after Thanksgiving Day CLOSES: 2nd Sun. of Jan.-(BUCKS ONLY)	
6*	OPENS: 1st day of Oct. CLOSES: Feb. 15 (1st 15 days are BUCKS ONLY)	OPENS: 2nd Sat. of Nov. CLOSES: Fri. before 3rd Sat. of Nov. OPENS: Mon. after the next to last Sun. of Jan. CLOSES: Last day of Jan.	OPENS: Sat. before Thanksgiving Day EXCEPT when there are 5 Sats. in Nov., then it will open on the 3rd Sat. of Nov. CLOSES: Fri. before 2nd Sat. of Dec. EXCEPT when there are 5 Sats. in Nov. and then it will close on the Fri. before the 1st Sat. of Dec.	OPENS: 2nd Sat. of Dec. EXCEPT when there are 5 Sats. in Nov., then it will open on the 1st Sat. of Dec. CLOSES: Next to last Sun. of Jan.
7	OPENS: 1st day of Oct. CLOSES: Last day of Jan.	OPENS: 2nd Sat. of Oct. CLOSES: Fri. before 3rd Sat. of Oct.(EITHER SEX) OPENS: 1st Sat. of Nov. CLOSES: Fri. before 2nd Sat. of Nov. (BUCKS ONLY).	OPENS: 3rd Sat. of Oct. CLOSES:3rd Sun. of Oct. (EITHER SEX) OPENS: Mon. after 3rd Sun. of Oct. CLOSES: Fri Before 1st Sat. of Nov.(BUCKS ONLY) OPENS: 3rd Sat. of Nov. CLOSES: Sun. after 3rd Sat. of Nov. (EITHER SEX) OPENS: Fri. after Thanksgiving. CLOSES: Sun. after Thanksgiving. (EITHER SEX)	OPENS: Mon. after Thanksgiving Day CLOSES: After 35 days(BUCKS ONLY UNLESS EITHER SEX SEASON IS IN PROGRESS) OPENS: Sat. after Christmas. CLOSES: Sun. after Christmas. (EITHER SEX)
8	OPENS: 3rd Sat. of Sept. CLOSES: Jan. 15	OPENS: 2nd Sat. of Oct. CLOSES: Fri. before 3rd Sat. of Oct. OPENS: Mon. after Thanksgiving Day CLOSES: Fri. before 1st Sat. of Dec.	OPENS: 3rd Sat. of Oct. CLOSES: Sun. after Thanksgiving Day.	OPENS: 1st Sat. of Dec. CLOSES: After 37 days.
9	OPENS: 1st day of Oct. CLOSES: Feb. 15 (1st 15 days are BUCKS ONLY)	OPENS: 2nd Sat. of Nov. CLOSES: Fri. before 3rd Sat. of Nov.(BUCKS ONLY) OPENS: Mon. after the next to last Sun. of Jan. CLOSES: Last day of Jan.(EITHER SEX 1ST 7 DAYS, BUCKS ONLY FOR REMAINDER OF SEASON)	OPENS: Sat. before Thanksgiving Day EXCEPT when there are 5 Sats. in Nov., then it will open on the 3rd Sat. of Nov. CLOSES: Fri. before 2nd Sat. of Dec. EXCEPT when there are 5 Sats. in Nov. and then it will close on the Fri. before the 1st Sat. of Dec. (BUCKS ONLY UNLESS EITHER SEX SEASON IS IN PROGRESS) OPENS: Fri. after Thanksgiving Day. CLOSES: Sun. after Thanksgiving day. (EITHER SEX)	OPENS: 2nd Sat. of Dec. EXCEPT when there are 5 Sats. in Nov., then it will open on the 1st Sat. of Dec. CLOSES: Next to last Sun. of Jan. (BUCKS ONLY UNLESS EITHER SEX SEASON IS IN PROGRESS) OPENS: 2nd Sat. of Dec. CLOSES: Sun. after 2nd Sat. of Dec. (EITHER SEX) OPENS: Sat. after Christmas. CLOSES: Sun. after Christmas. (EITHER SEX) OPENS: 2nd Sat. in Jan. CLOSES: Sun. after 2nd Sat. in Jan. (EITHER SEX)
10	OPENS: 3rd Sat. of Sept. CLOSES: Jan. 15	OPENS: 2nd Sat. of Oct. CLOSES: Fri. before 3rd Sat. of Oct. (EITHER SEX) OPENS: Mon. after Thanksgiving Day CLOSES: Fri. before 1st Sat. of Dec. (BUCKS ONLY)	OPENS: 3rd Sat. of Oct. CLOSES: Sun. after Thanksgiving Day(BUCKS ONLY UNLESS EITHER SEX SEASON IS IN PROGRESS) OPENS: 1st Sat. of Dec. CLOSES: After 37 days(BUCKS ONLY UNLESS EITHER SEX SEASON IS IN PROGRESS) OPENS: 3rd Sat. of Oct. CLOSES: Sun. after 3rd Sat. in Oct. (EITHER SEX) OPENS: 2nd Sat. of Nov. CLOSES: Sun. after 2nd Sat. of Nov. (EITHER SEX) OPENS: Fri. after Thanksgiving. CLOSES: Sun. after Thanksgiving. (EITHER SEX) OPENS: Sat. after Christmas. CLOSES: Sun. after Christmas. (EITHER SEX)	

F. 2014-2015 Modern Firearm Schedule (Either Sex Seasons)

Parish	Area	Modern Firearm Either-sex Days
West Carroll	Area 5	Opens Friday after Thanksgiving Day for days, and 1st Sat of Dec. for 2 days.

G. Farm-raised white-tailed deer on supplemented shooting preserves:

1. archery, firearm, primitive firearms—October 1-January 31 (either-sex).

H. Exotics on supplemented shooting preserves:

1. either sex—no closed season.

I. Spring squirrel hunting:

1. season dates—opens 1st Saturday of May for 23 days.

2. Closed areas:

a. Kisatchie National Forest, national wildlife refuges, and U.S. Army Corps of Engineers property and all WMAs except as provided in Paragraph 3 below.

3. Wildlife management area schedule—opens 1st Saturday of May for nine days on all WMAs except Fort Polk, Peason Ridge, Camp Beauregard, Pass-a-Loutre and Salvador. Dogs are allowed during this season for squirrel hunting. Feral hogs may be taken on wildlife management areas during this season.

4. Limits—daily bag limit is three and possession limit is six.

AUTHORITY NOTE: Promulgated in accordance with R.S. 56:115, R.S. 56:109(B) and R.S. 56:141(C).

HISTORICAL NOTE: Promulgated by the Department of Wildlife and Fisheries, Wildlife and Fisheries Commission, LR 21:707 (July 1995), amended LR 22:585 (July 1996), LR 23:871 (July 1997), LR 24:1324 (July 1998), LR 25:1290 (July 1999), repromulgated LR 25:1526 (August 1999), LR 26:1506 (July 2000), LR 27:1061 (July 2001), LR 28:1615 (July 2002), LR 29:1122 (July 2003), repromulgated LR 29:1521 (August 2003), LR 30:1494 (July 2004), LR 31:1627 (July 2005), LR 32:1254 (July 2006), LR 33:115 (January 2007), LR 33:1399 (July 2007), LR 34:1447 (July 2008), LR 35:1280 (July 2009), LR 35:2856 (December 2009), LR 36:1580 (July 2010), LR 37: 2207 (July 2011), LR 38:1747 (July 2012), LR 39:

Family Impact Statement

In accordance with Act 1183 of the 1999 regular session of the Louisiana Legislature, the Department of Wildlife and Fisheries, Wildlife and Fisheries Commission hereby issues its Family Impact Statement in connection with the preceding Notice of Intent. This Notice of Intent will have no impact on the six criteria set out at R.S. 49:972(B).

Poverty Impact Statement

The proposed rulemaking will have no impact on poverty as described in R.S. 49:973.

Public Comments

Interested persons may submit written comments relative to the proposed Rule until 4:30 p.m., Thursday, May 2, 2013 to Mr. Steve Smith, Wildlife Division, Department of Wildlife and Fisheries, Box 98000, Baton Rouge, LA, 70898-9000, or via email to ssmith@wlf.la.gov.

Public Hearing

Public hearings will be held at the following locations: March 19 beginning at 6 p.m., at LDWF Minden Office, 9961 Highway 80, Minden; March 19 beginning at 6 p.m., at the St. Tammany Parish Council Chambers, 21490 Koop Drive, Mandeville; March 20 beginning at 6 p.m., LDWF Monroe Office, 368 Centurytel Drive, Monroe; March 20 beginning at 6 p.m., Chalmette Elementary School Resource Center, 75 East Chalmette Circle, Chalmette; March 21 beginning at 6 p.m., USGS National Wetlands Research Center, 700 Cajundome Boulevard, Lafayette; March 26 beginning at 6:30 p.m., LSU Ag Center (next to Burton Coliseum), 7101 Gulf Highway, Lake Charles; March 27 beginning at 6 p.m., Alexandria Convention Hall, 915 3rd Street, Alexandria; March 27 beginning at 6 p.m., Houma Municipal Auditorium, 880 Verret St., Houma; March 28 beginning at 6 p.m., Waddill Outdoor Education Center, 4142 North Flannery Road, Baton Rouge. Also comments will be accepted at regularly scheduled Wildlife and Fisheries Commission Meetings from March through May.

The secretary of the Department of Wildlife and Fisheries is authorized to take any and all necessary steps on behalf of the Commission to promulgate and effectuate this Notice of Intent and the final Rule, including but not limited to, the filing of the fiscal and economic impact statements, the filing of the Notice of Intent and final Rule and the preparation of reports and correspondence to other agencies of government.

Ronald Graham
Chairman

FISCAL AND ECONOMIC IMPACT STATEMENT FOR ADMINISTRATIVE RULES
RULE TITLE: Resident Game Hunting Season

I. ESTIMATED IMPLEMENTATION COSTS (SAVINGS) TO STATE OR LOCAL GOVERNMENT UNITS (Summary)

The proposed rule change will have no anticipated implementation costs to state or local governmental units.

II. ESTIMATED EFFECT ON REVENUE COLLECTIONS OF STATE OR LOCAL GOVERNMENTAL UNITS (Summary)

The proposed rule change is expected to have no effect on revenue collections of state or local governmental units.

III. ESTIMATED COSTS AND/OR ECONOMIC BENEFITS TO DIRECTLY AFFECTED PERSONS OR NONGOVERNMENTAL GROUPS (Summary)

The proposed rule changes will impact hunters, guides, and hunt clubs that harvest or pursue does or antlerless deer in the affected areas. The reduction in doe or antlerless deer hunting days will reduce the number of opportunities to hunt deer.

In addition, there may be a short-term negative effect on receipts or income of businesses related to outdoor recreation, such as sporting goods stores and hunting guides because some hunters may reduce their deer-hunting activities and expenditures in response to the proposed rule change.

The proposed rule changes the number of days in which the legal harvest of deer of specific genders is permitted in five Deer Areas in Louisiana for the 2013-2014 and 2014-2015 seasons. It increases the number of days in which deer may be harvested in one area of north Louisiana in 2014-2015 and reduces the number of days on which the harvest of does or antlerless deer is permitted in four deer areas encompassing coastal and Florida parishes of Louisiana.

The landing of hurricanes Katrina and Rita in 2005, Gustav and Ike in 2008, and Isaac in 2012 had a negative effect on deer stocks and populations in several parishes in southern Louisiana. Changes in human settlement patterns in response to the hurricanes plus alterations in land management practices

by many private landowners have also affected deer stocks in these areas. The reductions in the amount of time permitting the legal harvest of does or antlerless deer is expected to reduce potential female harvest pressure by 30 percent in Deer Area 4 and 50 percent in Deer Areas 7, 9, and 10. These reductions in female harvest pressure are expected to improve deer stocks in the affected areas in the future.

In Deer Area 5, in 2014-2015, which includes West Carroll Parish, the number of days permitting the harvest of deer of either gender is increased by two. The number of days in which antlered deer may be harvested is increased by 14 days.

In Deer Area 4, which includes all of Saint Helena and Washington parishes and portions of East Baton Rouge, East Feliciana, Livingston, Saint Tammany, Tangipahoa and West Feliciana parishes, the number of doe or antlerless deer hunting days with primitive firearms will be reduced by four from 18 to 14. The number of doe or antlerless deer hunting days with modern firearms will be reduced by 46 from 65 to 19.

In Deer Area 7 which includes portions of Saint Mary and Iberia Parishes, the number of doe or antlerless deer hunting days with primitive firearms will be reduced by seven from 14 to seven. The number of doe or antlerless deer hunting days with modern firearms will be reduced by 54 from 63 to nine.

In Deer Area 9 which includes Ascension, Assumption, Jefferson, Lafourche, Orleans, Plaquemines, Saint Bernard, Saint James, Saint John the Baptist, Saint Charles, Terrebonne parishes, and portions of Iberia, Iberville, Lafayette, Livingston, Saint Mary, Saint Tammany, and Tangipahoa parishes, the number of doe or antlerless deer hunting days with primitive firearms will be reduced by 11 from 18 to seven. The number of doe or antlerless deer hunting days with modern firearms will be reduced by 56 from 65 to nine.

In Deer Area 10 which includes Cameron and Vermilion parishes and portions of Acadia, Calcasieu, Iberia, Jefferson Davis, and Lafayette parishes, the number of doe or antlerless deer hunting days with primitive firearms will be reduced by seven from 14 to seven. The number of doe or antlerless deer hunting days with modern firearms will be reduced by 65 from 74 to nine.

IV. ESTIMATED EFFECT ON COMPETITION AND EMPLOYMENT (Summary)

The proposed rule change may have a short-term indeterminable negative effect on employment in the private sector because hunters may reduce their deer-hunting activities and expenditures.

Lois Azzarello	Evan Brasseaux
Undersecretary	Staff Director
1302#043	Legislative Fiscal Office

NOTICE OF INTENT

Department of Wildlife and Fisheries
Wildlife and Fisheries Commission

Restricted Amphibians and Reptiles (LAC 76:XV.101)

The Wildlife and Fisheries Commission does hereby give notice of its intent to amend and clarify the wording related to restricted amphibians and reptiles, and to add three species to the list of species that are prohibited from take.

Title 76
WILDLIFE AND FISHERIES
Part XV. Reptiles and Amphibians
Chapter 1. Guidelines
§101. Recreational and Commercial Harvests; Prohibitions

A. - I. …

* * *

J. Restricted Amphibians and Reptiles

1. The species listed below are considered species of conservation concern by the department.

a. No live individual of the species listed in Paragraph J.3 of this Subsection may be killed or removed from the wild without permit issued by the department.

b. Up to five individuals of these species found dead may be salvaged.

c. Any number of individuals of these species may be captured, processed on site (i.e. measured, marked, tissue samples taken by means deemed acceptable by Department of Wildlife and Fisheries, etc.) and immediately released alive without removal from the site as part of a legitimate scientific study.

2. As more information concerning the status of these and other amphibians and reptiles becomes available, species may be removed from or added to this list.

3. List of amphibians and reptiles that may not be killed or removed from the wild without permit:

a. ambystoma tigrinum—tiger salamander;

b. plethodon serratussouthern red-backed salamander;

c. plethodon websteri—Webster's salamander;

d. pseudotriton montanus—mud salamander;

e. pseudotriton ruber—red salamander;

f. pituophis ruthveni—Louisiana pine snake;

g. pituophis melanoleucus lodingi—black pine snake;

h. crotalus adamanteus—eastern diamondback rattlesnake.

4. List of Threatened or Endangered Amphibians and Reptiles. The following species are listed as threatened or endangered in Louisiana (LAC 76:I.317) and may not be collected:

a. rana sevosa—Mississippi gopher frog;

b. chelonia mydas—green sea turtle;

c. eretmochelys imbricata—hawksbill sea turtle;

d. lepidochelys kempii—Kemp's ridley sea turtle;

e. dermochelys coriacea—leatherback sea turtle;

f. caretta caretta—loggerhead sea turtle;

g. gopherus polyphemus—gopher tortoise;

h. graptemys oculifera—ringed sawback turtle.

K. - L. …

AUTHORITY NOTE: Promulgated in accordance with R.S. 56:6(10), (13), (15) and (25), R.S. 56:23, and R.S. 56:632.

HISTORICAL NOTE: Promulgated by the Department of Wildlife and Fisheries, Wildlife and Fisheries Commission, LR 20:1135 (October 1994), amended LR 30:2495 (November 2004), LR 31:2569 (October 2005), LR 39:

The secretary of the Department of Wildlife and Fisheries is authorized to take any and all necessary steps on behalf of the commission to promulgate and effectuate this Notice of Intent and the final Rule, including, but not limited to, the filing of the fiscal and economic impact statement, the filing of the Notice of Intent and final Rule and the preparation of reports and correspondence to other agencies of government.

Family Impact Statement

In accordance with Act 1183 of 1999 regular session of the Louisiana Legislature, the Department of Wildlife and Fisheries, Wildlife and Fisheries Commission hereby issues its Family Impact Statement in connection with the preceding Notice of Intent. This Notice of Intent will have no impact on the six criteria set out at R.S. 49:972(B).

Poverty Impact Statement

The proposed rulemaking will have no impact on poverty as described in R.S. 49:973.

Public Comments

Interested persons may submit written comments on the proposed Rule to Mr. Robert Love, Coastal Natural Resources Division, Department of Wildlife and Fisheries, Box 98000, Baton Rouge, LA, 70898-9000 no later than 4:30 p.m., April 4, 2013.

Ronald "Ronny" Graham
Chairman

FISCAL AND ECONOMIC IMPACT STATEMENT FOR ADMINISTRATIVE RULES
RULE TITLE: Restricted Amphibians and Reptiles

I. ESTIMATED IMPLEMENTATION COSTS (SAVINGS) TO STATE OR LOCAL GOVERNMENT UNITS (Summary)

No increase or decrease in costs or savings to state or local governmental units associated with implementing the proposed rule is anticipated.

II. ESTIMATED EFFECT ON REVENUE COLLECTIONS OF STATE OR LOCAL GOVERNMENTAL UNITS (Summary)

The proposed rule is expected to have no effect on revenue collections of state or local governmental units.

III. ESTIMATED COSTS AND/OR ECONOMIC BENEFITS TO DIRECTLY AFFECTED PERSONS OR NONGOVERNMENTAL GROUPS (Summary)

The proposed rule clarifies language pertaining to the taking of restricted amphibians or reptiles from the wild for purposes of scientific research. The proposed rule change requires individuals or entities to obtain a permit from the Louisiana Department of Wildlife and Fisheries whenever they want to remove a specimen of restricted amphibian or reptile species from the wild.

Among the individuals or non-governmental groups that will be directly affected by this rule are researchers, laboratories, universities, and other research institutions that may want to research these species. These entities are already required to obtain permits from the Department before removing restricted amphibians or reptiles under most circumstances. The proposed rule will eliminate one minor exception to the permit requirement that is anticipated to have little practical effect on the permit application and acquisition process.

The proposed rule will add one species to the list of threatened or endangered species and three species to the list of amphibians and reptiles that may not be killed without a permit. This change is anticipated to have no effect on economic costs or benefits because there are no current documented commercial harvests of these species.

IV. ESTIMATED EFFECT ON COMPETITION AND EMPLOYMENT (Summary)

The proposed rule is expected to have no effect on competition or employment.

Lois Azzarello	Evan Brasseaux
Undersecretary	Staff Director
1302#035	Legislative Fiscal Office

NOTICE OF INTENT

Workforce Commission
Office of Unemployment Insurance

Appealed Claims for Board of Review
(LAC 40:IV.109 and 113)

Pursuant to the authority granted in R.S. 23:1653, R.S. 23:1654, and in accordance with the provisions of the Administrative Procedure Act, R.S. 49:950 et seq., notice is hereby given that the Louisiana Workforce Commission proposes to amend §§109 and 113. The purpose of the amendment to §109 is to remove obsolete nomenclature from the body of the Section and to explain the effects of Saturdays, Sundays, and legal holidays on the computation of time delays associated with R.S. 23:1629 and R.S. 23:1630. Stylistic revisions are proposed to §113 to improve readability. Revisions to §113 are also proposed to extend the 15-minute grace period afforded to in-person hearing appellants to telephone hearing appellants.

Title 40
LABOR AND EMPLOYMENT
Part IV. Employment Security
Subpart 1. Board of Review
Chapter 1. Employment and Security Law
§109. Appeals to the Appeals Tribunal and Board of Review

A. The party appealing from the agency's initial determination shall file written appeal, setting forth information required therein within 15 days after date notification was given or was mailed to his last known address.

B. It is hereby further provided that any communication written by claimant or employer to the Louisiana Workforce Commission or the board disputing the determination or appeal decision may be accepted as an appeal, provided said written communication is received by any office of the Louisiana Workforce Commission or by the board within 15 days after notification, was given or was mailed to his last known address.

C. Legal holidays and days on which the Louisiana Workforce Commission is closed shall not serve to extend the delay periods specified in R.S. 23:1629 and R.S. 23:1630.

D. Proof of the timeliness of mailing a request for appeal shall be shown only by the date indicated on the electronic transmission, by a legible official United States postmark, or by official receipt or certificate from the United States Postal Service made at the time of mailing which indicates the date thereof. In the event that the date of the electronic transmission or postmark is absent, illegible, or manifestly

incorrect, the date that the request is received in the appeals tribunal or board of review office shall determine whether the appeal was timely filed.

AUTHORITY NOTE: Promulgated in accordance with R.S. 23:1471-1713.

HISTORICAL NOTE: Promulgated by the Department of Labor, Office of Employment Security, LR 15:485 (June 1989), amended by the Department of Employment and Training, Board of Review, LR 17:36 (January 1991), amended by the Workforce Commission, Office of Unemployment Insurance, LR 39:

§113. Postponements, Continuances, Reopenings, and Rehearings

A. Continuances or Postponements

1. A scheduled hearing may be postponed or continued by the administrative law judge for good cause, either upon his own motion or upon a showing of good cause by written request of a party, submitted to the administrative law judge whose name and address appear on the notice of hearing. Written notice if the time and place of a postponed or continued hearing shall be given to the parties or their named representatives.

2. The administrative law judge shall provide written denial to any party whose written request for postponement or continuance is received after his decision has been mailed. The requesting party shall also be provided written notice of his right either to file written request of a reopening of hearing before the administrative law judge within seven days from the date of mailing of the decision on the claim or to file further appeal to the Board of Review under §109 and §125. The untimely request for postponement or continuance shall not itself be treated as an appeal of the decision to the board of review. An appeal may also be timely filed by a party before the Board of Review under §109 and §125 after a written response to the request for reopening is issued by the administrative law judge.

3. Any such request of a party and response of the administrative law judge shall be incorporated in the case file.

B. Non-appearance of Appellant. If the appellant, who is the party who files the appeal before the appeals tribunal, fails to appear within 15 minutes after the scheduled hearing time at an in-person hearing, or fails to be available to participate in a scheduled telephone hearing at the scheduled hearing time, the administrative law judge shall order the appellant in default and issue a dismissal of appeal. In such event, the agency determination shall become the final decision. Written notice of default of the appellant and dismissal of the appeal shall be mailed to the parties. The appellant either may file a written request for reopening before the administrative law judge, with a showing of good cause, within seven days of the date of mailing of the dismissal decision or may file an appeal before the Board of Review under §109 and §125. If such appellant is denied a reopening by the administrative law judge, any such request shall be forwarded to the board of review as an appeal as of the date of the written request for reopening. If it is determined by the administrative law judge on reopening or by the Board of Review on appeal that the appellant has shown good cause for his nonappearance, the dismissal shall be vacated and a new hearing on the merits shall be scheduled.

C. Non-Appearance or Late Appearance of Appellee. If the appellee, who is the party whose agency determination is being appealed by another party before the appeals tribunal, fails to appear at the scheduled hearing time of an in-person hearing, or fails to be available to receive the telephone call to participate in a scheduled telephone hearing at the scheduled hearing time, the administrative law judge shall proceed to conduct the hearing and issue a decision on the merits based upon the administrative record and any evidence and testimony presented by the appellant. The appellee may either file a written request for reopening before the administrative law judge, with a showing of good cause, within seven days of the date of mailing of the decision or may file an appeal before the board of review under §109 and §125. If such appellee is denied a reopening by the administrative law judge, any such request shall be forwarded to the board of review as an appeal as of the date of the written request for reopening. If it is determined by the administrative law judge on reopening or by the board of review on appeal that the appellee has shown good cause for his non-appearance, the decision shall be vacated, and a new hearing on the merits shall be scheduled.

D. Good Cause for Reopening or Rehearing

1. The administrative law judge or the Board of Review shall make a determination of good cause for failure to appear only if the written request for reopening or the appeal filed by the party contains a statement of the reason(s) for his failure to act in a timely manner and reasonably justifies a finding of good cause to excuse such failure.

2. To determine whether good cause has been shown in a request for reopening or in an appeal to excuse the failure of a party to appear, the administrative law judge and the board of review shall consider any relevant factors, including, but not limited to:

a. reasonably prudent behavior;
b. untimely receipt of notice;
c. administrative error;
d. reasons beyond control or avoidance;
e. reasons unforeseen;
f. timely effort to request continuance;
g. physical inabilities;
h. degree of untimeliness; or
i. prejudice to parties.

3. Failure to provide timely notice of change or correction of address shall not establish good cause for failure to appear.

4. The basis of any determination by the administrative law judge or the board of review relating to good cause must be provided in the written response or decision. The fulfillment of each of the above factors is not required in any such response or decision for the establishment of good cause for failure to appear.

5. A written request for reopening before the administrative law judge may be filed within seven days of the date of mailing of his decision or an appeal to the board of review may be filed under §109 and §125 by any party for admission of additional evidence upon the showing of good cause that any such evidence is newly discovered or was unavailable or unknown at the time of the hearing.

E. Terminology. The term party or parties, as used in these rules, shall mean the claimant and the employer or any legal or designated representative thereof, including the administrator in those appeals in which he is specified as a party under R.S. 23:1629.

AUTHORITY NOTE: Promulgated in accordance with R.S. 23:1471-1713.

HISTORICAL NOTE: Promulgated by the Department of Labor, Office of Employment Security, LR 15:486 (June 1989), amended by the Department of Employment and Training, Office of Employment Security, LR 17:36 (January 1991), repromulgated by the Department of Labor, Office of Employment Security, Board of Review LR 23:76 (January 1997), amended by the Workforce Commission, Office of Unemployment Insurance, LR 39:

Family Impact Statement

Implementation of the proposed Rule should not have any known or foreseeable impact on any family as defined by R.S. 49:972(D) or on any family formation, stability, and autonomy. The proposed Rule shall not have any impact on the six criteria set forth in R.S. 49:972(d).

Poverty Impact Statement

The proposed rulemaking will have no impact on poverty as described in R.S. 49.973.

Small Business Statement

The proposed Rule's impact on small business has been considered in accordance with R.S. 49:965.6, and it is estimated that the proposed actions will have negligible impact on small businesses as defined in the Regulatory Flexibility Act.

Public Comments

All interested parties are invited to submit views, arguments, information, or comments on the proposed Rule to Director, Office of Unemployment Insurance Administration, Louisiana Workforce Commission, P.O. Box 94094, Baton Rouge, LA 70804-9040. Written comments must be submitted and received by the agency within 20 days from the publication of this notice. A request pursuant to R.S. 49:953(A)(2) for oral presentation, argument, or public hearing must be made in writing and received by the agency within 20 days of the publication of this notice.

Curt Eysink
Executive Director

FISCAL AND ECONOMIC IMPACT STATEMENT FOR ADMINISTRATIVE RULES
RULE TITLE: Appealed Claims for Board of Review

I. ESTIMATED IMPLEMENTATION COSTS (SAVINGS) TO STATE OR LOCAL GOVERNMENT UNITS (Summary)

This rule proposes to amend the Louisiana Administrative Code (LAC), Title 40, Part IV, Chapter 1 Appealed Claims for Board of Review, Sections 109 and 113.

The proposed rule makes the following amendments to Section 109: (1) removes obsolete nomenclature from the body of the rule as well as (2) explain the effects of Saturday, Sunday, and legal holidays on the computation of time delays associated with R.S. 23:1629 and R.S. 23:1630.

The proposed rule makes the following amendments to Section 113: (1) stylistic revisions to improve readability, and (2) extends the 15-minute grace period afforded to in-person hearing appellants to telephone hearing appellants to provide consistency and fairness in the application of the rule.

The proposed rule change will have no impact to State and local governmental expenditures. The Office of Unemployment Insurance Administration (OUIA) within the Louisiana Workforce Commission only anticipates administrative expense necessary for the promulgation and revision of publishing the rules. The cost of publishing rulemaking is estimated to be approximately $1,600.00 for FY 12-13. This is a one-time cost that is routinely included in the department's annual operating budget.

II. ESTIMATED EFFECT ON REVENUE COLLECTIONS OF STATE OR LOCAL GOVERNMENTAL UNITS (Summary)

This proposed rule will have no anticipated effect on revenue collections of state or local governmental units.

III. ESTIMATED COSTS AND/OR ECONOMIC BENEFITS TO DIRECTLY AFFECTED PERSONS OR NONGOVERNMENTAL GROUPS (Summary)

This proposed rule is not anticipated to have any fiscal impact on persons directly affected or non-governmental groups.

IV. ESTIMATED EFFECT ON COMPETITION AND EMPLOYMENT (Summary)

There will be no effect on competition and employment as a result of the implementation of this proposed rule.

Curt Eysink	John D. Carpenter
Executive Director	Legislative Fiscal Officer
1302#114	Legislative Fiscal Office

NOTICE OF INTENT

Workforce Commission
Office of Unemployment Insurance

Benefits for Unemployment Insurance
(LAC 40:IV.Chapter 3)

Pursuant to the authority granted in R.S. 23:1653, R.S. 23:1654, in accordance with the provisions of the Administrative Procedure Act, R.S. 49:950 et seq., notice is hereby given that the Louisiana Workforce Commission proposes to amend §301, to amend §323, promulgate §324, amend §§353 and 357, promulgate §368, and amend §§369 and 371. The proposed revision of §301 is solely to change the name of the agency to Louisiana Workforce Commission. The amendments to §323 are to clarify the time in which an employer shall file a labor dispute. The promulgation of §324 proposes to clarify R.S. 1624.1. Revisions to §353 are proposed to clarify the Agency's disclosure of information. The modifying of §357 is to add a reference to §324. Section 368 is proposed to clarify R.S. 23:1601(8)(a) what adequate documentation should be provided by claimant. The proposed revisions to §369 are meant to clarify terminology employed in the companion statute (R.S. 23:1713) and to incorporate amendments made to R.S. 23:1713. Finally, the proposed revisions for §371 are to amend the payment schedule.

Title 40
LABOR AND EMPLOYMENT
Part IV. Employment Security
Subpart 1. Board of Review
Chapter 3. Employment Security Law
§301. Authority

A. By virtue of the authority vested in the administrator of the Louisiana Workforce Commission of the state of Louisiana by the Louisiana Employment Security Law, R.S. 23:1471-1713 (Act 97 of 1936), as amended, and in order to establish uniform procedure under said law, the following

regulations have been and are adopted and prescribed and all other regulations now in effect are hereby rescinded, but remain in full force and effect relative to all matters arising prior to the effective date of the hereinafter prescribed and adopted regulations.

AUTHORITY NOTE: Promulgated in accordance with R.S. 23:1471-1713.

HISTORICAL NOTE: Promulgated by the Department of Labor, Office of Employment Security, LR 15:487 (June 1989), amended by the Department of Employment and Training, Office of Employment Security, LR 17:38 (January 1991), amended by the Workforce Commission, Office of Unemployment Insurance, LR 39:

§323. Separation Notices

A. Individual Separation Notices

1. Under Conditions Which May Disqualify. Whenever a worker is separated from his employment permanently or for an indefinite period or for an expected duration of seven or more days, under conditions which may disqualify him for benefits pursuant to the provisions of R.S. 23:1601, his employer shall within three days after such separation give him, or if such delivery is impossible or impracticable, mail to his last known address a separation notice alleging Disqualification on which the employer has entered the required information. Within the same period of time, the employer shall send a copy of such separation notice, certified by himself or his duly authorized agent, to the administrator.

B. Mass Separation Notices

1. In the event of a separation of 50 or more individuals by an employer for the same reason and about the same time, the employer shall notify the administrator of such separation. Upon receipt of such notice, the administrator shall make full investigation.

C. Labor Dispute Notices

1. In case of a separation due to a labor dispute, the employer shall within three days after such separation file with the administrator a notice setting forth the existence of such a dispute and the approximate number of workers affected.

2. Upon request by the administrator, such employer shall furnish the names of workers ordinarily attached to the department or the establishment where unemployment is alleged to be caused by a labor dispute.

AUTHORITY NOTE: Promulgated in accordance with R.S. 23:1471-1713.

HISTORICAL NOTE: Promulgated by the Department of Labor, Office of Employment Security, LR 15:489 (June 1989), amended by the Department of Employment and Training, Office of Employment Security, LR 17:40 (January 1991), amended by the Workforce Commission, Office of Unemployment Insurance, LR 39:

§324. Reply to Notice of Eligibility

A. When the employer or the employer's agent receives the notice specified by R.S. 23:1624 of a claimant's eligibility for benefits or other notice that an application for benefits has been made; the employer or employer's agent shall, within the time specified in the notice examine the notice against the claimant's record and shall reply to the notice. The reply shall either protest or indicate no known cause to protest a decision granting eligibility or otherwise shall inform the department of any known facts bearing on a determination whether benefits shall be granted.

AUTHORITY NOTE: Promulgated in accordance with R.S. 23:1471-1713.

HISTORICAL NOTE: Promulgated by the Workforce Commission, Office of Unemployment Insurance, LR 39:

§353. Disclosure of Information Pursuant to R.S. 23:905

A. R.S. 23:905 governs the agency's sharing Louisiana workers' employer and wage information (hereinafter *shared information*) with third-party vendors that facilitate the obtaining of such information by third parties under circumstances where such sharing is permitted by 20 CFR Part 603 and not otherwise prohibited by law. A third-party vendor is a person or entity that facilitates the obtaining of shared information as an authorized agent of another person or entity to whom the release of the shared information is permitted by law and by 20 CFR Part 603. However, this rule shall not apply to or restrict the sharing of such information, to the extent permitted by law and 20 CFR Part 603, directly to the individual or the individual's attorney.

B. All sharing of data pursuant to R.S. 23:905 shall comply with 20 CFR Part 603 and any other federal requirements or formal guidance governing such data sharing, including but not by way of limitation the requirement that the terms and conditions of such data sharing arrangements be prescribed in a data-sharing agreement. The agency shall require third party vendors to sign agreements with the agency establishing specific terms and conditions determined by the agency, in its sole discretion, to be necessary and appropriate to the particular data sharing arrangement with the third-party vendor.

C. Before providing any shared information to a third-party vendor, the agency shall require from the third-party vendor and/or the person or entity on whose behalf the third-party vendor requests shared information (the client) documentation sufficient to verify the third-party vendor's representation of the client. The agency's costs in establishing any such data sharing arrangement shall be paid to the agency as a condition precedent to the implementation of any information sharing arrangement under R.S. 23:905.

D. A release consenting to the disclosure that meets the requirements of 20 CFR Part 603 and signed by each person whose information is requested shall be provided to the agency before any data about that person is shared pursuant to this rule, and the agency's cost in providing said information shall be paid to the agency before the requested information is provided to the third-party vendor. The agency may accept a release that is effectuated electronically to the extent permitted by United States Department of Labor unemployment insurance program letter No. 19-12, or any other subsequent official guidance or requirements promulgated by the United States Department of Labor.

E. Third-party vendors shall reimburse the agency for all costs the agency incurs in defending or resisting subpoenas or other legal demands made upon the third-party vendor or their customers seeking the release of information shared pursuant to R.S. 23:905.

F. The purposes for which shared information may be provided to third-party vendors are limited to lending purposes, tenant screening and insurance underwriting, and such sharing is permitted only if the purpose specified in the release provides a service or benefit the individual expects to receive as a result of signing the release. The use of shared

information for marketing or any other purposes is prohibited.

G. As required by 20 CFR Part 603, the agency must conduct, and third-party vendors and their clients must permit, random on-site visits by agency auditors of their compliance with the requirements governing their access to, redisclosure of, and retention and disposal of shared information.

AUTHORITY NOTE: Promulgated in accordance with R.S. 23:1471-1713.

HISTORICAL NOTE: Promulgated by the Department of Labor, Office of Employment Security, LR 15:494 (June 1989), amended by the Department of Employment and Training, Office of Employment Security, LR 17:46 (January 1991), amended by the Workforce Commission, Office of Unemployment Insurance, LR 39:

§357. Terms and Conditions Not Applicable to Claims for Payment of Extended Compensation

A. Section 1600(4) of the Louisiana Employment Security Law, pertaining to a waiting period of one week, is not applicable to claims for extended compensation.

B. All disqualifications for regular benefits apply to extended benefits in the same manner and to the same extent as to regular claims.

C. The forwarding of an extended compensation claim notice to a former employer of an individual does not serve to reopen a previously resolved issue or open to adjudication any issue concerning which an employer failed to furnish information within the time provided by §323 and §324.

AUTHORITY NOTE: Promulgated in accordance with R.S. 23:1471-1713.

HISTORICAL NOTE: Promulgated by the Department of Labor, Office of Employment Security, LR 15:495 (June 1989), amended by the Department of Employment and Training, Office of Employment Security, LR 17:46 (January 1991), amended by the Workforce Commission, Office of Unemployment Insurance, LR 39:

§368. Disqualification for Benefits Pursuant to R.S. 23:1601(8)(a)

A. The agency will notify the claimant by mail or other delivery method if the administrator has received information that the claimant has earned unreported wages for the weeks claimed.

1. The claimant shall have seven days from the date of the mailing to respond.

a. The claimant must provide adequate supporting documentation to establish that the unreported wages are incorrect.

b. Adequate documentation may include but is not limited to:

i. proof of incorrect identity;

ii. proof of incorrect date of wages;

iii. check stubs;

iv. time sheets;

v. notice of separation or termination.

2. If the claimant requests notice to be sent by electronic delivery or delivery in another method beside mail, then the claimant shall have seven days from the delivery date of such notice to respond.

3. Acceptable forms of electronic delivery may include but are not limited to:

a. facsimile;

b. e-mail.

AUTHORITY NOTE: Promulgated in accordance with R.S. 23:1471-1713.

HISTORICAL NOTE: Promulgated by the Workforce Commission, Office of Unemployment Insurance, LR 39:

§369. Waiver of Overpayment Recovery

A. Requirements for Waiver of Recovery of Overpayments

1. A waiver of the overpayment may be granted only if:

a. the claimant was without fault in causing the overpayment;

b. repayment would be against equity and good conscience; and

c. the claimant provided supporting documentation of his inability to pay in full or according to the repayment table in §371.

2. When a claimant appeals an overpayment determination, a written questionnaire shall be provided to claimant for an answer. The claimant shall return the completed questionnaire to the administrator within 15 days of the date of such questionnaire. If the claimant fails to return the completed questionnaire timely, then the waiver shall be denied.

3. In any proceedings, under this rule, the overpaid claimant shall have the burden of proving entitlement to a waiver.

B. Determination of Fault

1. To determine if fault existed on the part of the claimant, the factors considered shall include:

a. gave inaccurate information;

b. failed to disclose a material fact;

c. knew or should have known that he/she is not entitled to the benefits;

d. caused the overpayment by an act of omission of information known to the claimant; or

e. had a determination of ineligibility due to fraud.

2. An affirmative finding on any one of the above precludes waiver of the overpayment.

C. Equity and Good Conscience Determination

1. In determining whether recovery of the overpayment would be against equity and good conscience, the factors considered shall include:

a. financial and other information provided in response to the agency's request, which shall include information about:

i. all financial resources available to the claimant and members of the claimant's household;

ii. the claimant's living expenses, including, but not by way of limitation, expenses for:

(a). food;

(b). clothing;

(c). rent;

(d). debt payment;

(e). obligations;

(f). accident and health insurance;

(g). medical care;

(h). taxes;

(i). work related transportation; and

(j). the support of others for whom the claimant is legally responsible; and

iii. any other factors that impact the claimant's ability to cover ordinary living expenses for at least six months;

2. whether the claimant was given notice that a reversal on appeal would result in an overpayment.

D. All notices of determination of overpayment shall include information regarding rights of appeal and waiver provisions.

AUTHORITY NOTE: Promulgated in accordance with R.S. 23:1471-1713.

HISTORICAL NOTE: Promulgated by the Department of Labor, Office of Employment Security, LR 15:1086 (December 1989), repromulgated LR 17:48 (January 1991), amended by the Workforce Commission, Office of Unemployment Insurance, LR 39:

§371. Overpayment Recovery; Civil Penalties

A. This rule prescribes an acceptable repayment schedule for the purpose of collecting overpaid benefits pursuant to R.S. 23:1714.

Repayment Tables Total for Overpayments			
Total Overpayment Amount is: At Least	**But Less Than:**	**Number of Months to Repay**	**Recommended Monthly Payment**
$1	$500	12	$41
$501	$1,000	12	$83
$1,001	$1,500	18	$83
$1,501	$2,000	18	$111
$2,001	$2,500	24	$104
$2,501	$3,000	24	$125
$3,001	$3,500	30	$116
$3,501	$4,000	30	$133
$4,001	$4,500	36	$125
$4,501	$5,000	36	$138
$5,001	$5,500	42	$130
$5,501	$6,000	42	$142
$6,001	$6,500	48	$435
$6,501	$7,000	48	$145
$7,001	$7,500	54	$138
$7,501	$8,000	54	$148
$8,001	$8,500	60	$141
$8,501	$9000 or greater	60	$150

C. Initial payment must be received within 45 days of the date upon which the repayment agreement is signed. Subsequent payments are due to be paid in monthly increments which must be received no later than 30 days thereafter.

D. An adjustment of the repayment schedule may be granted at the written request of the claimant only if there has been material change in his or her financial condition.

E. Requests to adjust the repayment schedule will only be granted if warranted by the criteria set forth in §369.C, waiver of overpayment recovery, equity and good conscience determination.

AUTHORITY NOTE: Promulgated in accordance with R.S. 23:1471-1713.

HISTORICAL NOTE: Promulgated by the Department of Labor, Office of Employment Security, LR 15:1085 (December 1989), repromulgated LR 17:48 (January 1991), amended by the Workforce Commission, Office of Unemployment Insurance, LR 39:

Family Impact Statement

Implementation of the proposed Rule should not have any known or foreseeable impact on any family as defined by R.S. 49:972(D) or on any family formation, stability, and autonomy. The proposed Rule shall not have any impact on the six criteria set forth in R.S. 49:972(D).

Poverty Impact Statement

The proposed rulemaking will have no impact on poverty as described in R.S. 49:973.

Small Business Statement

The proposed Rule's impact on small business has been considered in accordance with R.S. 49:965.6 and it is estimated that the proposed actions will have negligible impact on small businesses as defined in the Regulatory Flexibility Act.

Public Comments

All interested parties are invited to submit views, arguments, information, or comments on the proposed Rule to Director, Office of Unemployment Insurance Administration, Louisiana Workforce Commission, P.O. Box 94094, Baton Rouge, LA 70804-9040. Written comments must be submitted and received by the agency within 20 days from the publication of this notice. A request pursuant to R.S. 49:953(A)(2) for oral presentation, argument, or public hearing must be made in writing and received by the agency within 20 days of the publication of this notice.

Curt Eysink
Executive Director

FISCAL AND ECONOMIC IMPACT STATEMENT FOR ADMINISTRATIVE RULES
RULE TITLE: Benefits for Unemployment Insurance

I. ESTIMATED IMPLEMENTATION COSTS (SAVINGS) TO STATE OR LOCAL GOVERNMENT UNITS (Summary)

This rule proposes to amend the Louisiana Administrative Code (LAC), Title 40, Part IV, Chapter 3 Employment Security Law, Sections 301, 323, 324, 325, 357, 368, 369, and 371. It is anticipated that the implementation of the revisions to Sections 301, 323, 324, 353, 357, 368, 369, and 371 will have no fiscal impact for FY 13-14.

The proposed rule makes the following amendments to the sections listed below: (1) Section 301 removes obsolete nomenclature from the body of the rule and makes no substantive changes; (2) Section 323 changes the time period for an employer's requirement to submit a separation notice from 72 hours to three days. The change is alleviating the confusion associated with the counting of exact hours; (3) Section 324 clarifies employer response time pursuant to R.S. 23:1624.1; (4) Section 325 references the definition of a partially unemployed individual and deletes obsolete nomenclature pertaining to the name of the agency; (5) Section 357 adds a reference to include Section 324 if promulgated. The reference is necessary because Section 324 clarifies the employer's requirement to respond to notices; (6) Legislative amendments to R.S. 23:1601(8)(a) requires promulgation of Section 368 to explain what constitutes adequate supporting wage documentation and clarify the seven (7) days response time and delivery method; (7) Section 369 clarifies terminology employed in the companion statute (R.S. 23:1713) and to incorporate amendments made to R.S. 23:1713 in reference to the waiver of overpayment recovery; and (8) Section 371 clarifies the requirements of Act 344 of the 2012 Regular Session of the Louisiana Legislature pertaining to penalties for overpayment. The rule also proposes to introduce the new payment schedule, which reduces the monthly minimum repayment.

This proposed rule change will no impact on State or local governmental expenditures. The Office of Unemployment Insurance Administration (OUIA) only anticipates administrative expenses estimated at $1,600 for the

promulgation and revision of these proposed rules and final rules. This is a one-time cost routinely included in the agency's operating budget.

II. ESTIMATED EFFECT ON REVENUE COLLECTIONS OF STATE OR LOCAL GOVERNMENTAL UNITS (Summary)

This proposed rule will have no anticipated effect on revenue collections of state or local governmental units.

III. ESTIMATED COSTS AND/OR ECONOMIC BENEFITS TO DIRECTLY AFFECTED PERSONS OR NONGOVERNMENTAL GROUPS (Summary)

Section 353 of the purposed rule will only affect third party agents attempting to receive wage information on behalf of their clients. It is anticipated that the proposed revision to Section 369, the rule governing the grant or denial of waiver of recovery of overpaid benefits, will have nominal impact on claimants seeking waivers; it defines financial hardship in accordance with the statutory amendment to R.S. 23:1713. Section 371 will positively impact those individuals with overpayment balances that have repayment plans by providing a more affordable payment schedule. The average claimant on a repayment schedule will have 30 days longer to pay and pay $10 less per month. Some claimants will receive an additional 9 months and pay $40 less per month.

IV. ESTIMATED EFFECT ON COMPETITION AND EMPLOYMENT (Summary)

It is anticipated that there will be no effect on competition and employment as a result of the implementation of proposed rules.

Curt Eysink	John D. Carpenter
Executive Director	Legislative Fiscal Officer
1302#115	Legislative Fiscal Office

NOTICE OF INTENT

Workforce Commission
Office of Unemployment Insurance

Unemployment Insurance (LAC 40:IV.Chapter 3)

Pursuant to the authority granted in R.S. 23:1653, R.S. 23:1654, and in accordance with the provisions of the Administrative Procedure Act, R.S. 49:950 et seq., notice is hereby given that the Louisiana Workforce Commission proposes to repeal §§309 and 333, and to amend §§307, 325, 329, 331, 337, 343, and 359. The proposed revision of §325 is to change the name of the agency to Louisiana Workforce Commission as well as change the guidelines on how a claimant files. Amendments to §329 are to change the name of the agency and to remove the requirement of a claimant having to file at the local office as well. The proposed revisions of §331 are to change the agency's name and the place of filing for the claimant. Changes to §337 are to delete method of payment by check from claimant and add the use of electronic fund transfer. Revisions to §343 include no employer credits for contributions to another state. This text has been added to clarify the requirement to file contribution reports and pay contributions for employees who perform services in more than one state, and to change the name of the agency. Finally, the revisions to §359 are to change the name of the agency.

Title 40
LABOR AND EMPLOYMENT
Part IV. Employment Security
Subpart 1. Board of Review
Chapter 3. Employment Security Law

§307. Contributions, Interest, Mailing Date of Contributions and Contribution Reports

A. Accrual and Due Date of Contributions. Contributions due on wages paid shall become due and shall be paid on or before the last day of the month following the calendar quarter in which such contributions accrue.

B. Interest. Interest prescribed by law on all overdue contributions shall accrue on or after the day following the due date on any contribution payments up to and including the date of payment.

C. Accrual and Due Date of Contributions by Employers Who Become Subject within the Calendar Year

1. With respect to contributions due on wages paid, the first contribution payment of an employing unit which becomes an employer under the Louisiana Employment Security Law at any time during the calendar year, shall become due on, and shall be paid on or before the last day of the month following the calendar quarter in which such employing unit becomes an employer.

2. The first contribution payment of an employer becoming liable during a calendar year shall include all contributions with respect to wages paid for employment occurring on and after January 1 of the calendar year up to and including the end of the calendar quarter in which the employing unit becomes an employer. The first contribution payment of an employing unit which (voluntarily) elects with the written approval of the administrator to become an employer shall accrue at the end of the calendar quarter with respect to wages for employment occurring on and after the date on which such election was approved, and shall be due and paid on or before the last day of the calendar month following the calendar quarter during which the conditions of becoming an employer are satisfied.

AUTHORITY NOTE: Promulgated in accordance with R.S. 23:1471-1713.

HISTORICAL NOTE: Promulgated by the Department of Labor, Office of Employment Security, LR 15:488 (June 1989), amended by the Department of Employment and Training, Office of Employment Security, LR 17:39 (January 1991), amended by the Workforce Commission, Office of Unemployment Insurance, LR 39:

§309. Reports on Magnetic Media

Repealed.

AUTHORITY NOTE: Promulgated in accordance with R.S. 23:1471-1713.

HISTORICAL NOTE: Promulgated by the Department of Employment and Training, Office of Employment Security, LR 18:372 (April 1992), repealed by the Workforce Commission, Office of Unemployment Insurance, LR 39:

§325. Definitions of Week

A. The term:

1. *week*—a *calendar week*;

2. *calendar week*—the seven consecutive days commencing at 12:01 a.m. on Sunday and ending at midnight on Saturday.

B Week of Total or Part-Total Unemployment

1. A *week of total* or *part-total unemployment*—the seven-consecutive-day period commencing with the first day of the calendar week in which occurs the day, subsequent to his separating from work, on which an individual registers and files a claim to the Louisiana Workforce Commission, except as otherwise provided in §325.B.2 and 3.

2. A week of total or part-total unemployment for an individual who fails for good cause to register and file a claim for benefits as specified in §325.B.1-3 shall consist of the calendar week in which the individual becomes unemployed, provided that such individual registers with the Louisiana Workforce Commission within a period of seven days after such first day of total or part-total unemployment, or on the next day thereafter on which the itinerant service is available, or by mail within 14 days after the commencement of such unemployment; and thereafter each calendar week immediately following such week, provided the individual claims benefits for each such week in accordance with regulations.

3. A week of total or part-total unemployment of any individual affected by a mass separation or labor dispute shall consist of the calendar week in which the individual becomes unemployed, provided that notice thereof is filed by the individual with the administrator within 14 days next following such first day of unemployment; and thereafter each calendar week immediately following such week, provided the individual claims benefits for any such week in accordance with regulations.

C. Week of Partial Unemployment

1. With respect to a partially unemployed individual as defined by §327.B.1 whose wages are paid on a weekly basis, a week of partial unemployment shall consist of a calendar week, provided that the administrator may, upon his own initiative or upon application, prescribe as to any individual or group of individuals such other seven-consecutive-day period as he may find appropriate under the circumstances.

2. For the purpose of this regulation, an individual shall be deemed to be partially unemployed during not more than four consecutive weeks of total unemployment if such weeks immediately follow a week of partial unemployment and if in such weeks there is a reasonable expectation of his return to employment with such employer.

AUTHORITY NOTE: Promulgated in accordance with R.S. 23:1471-1713.

HISTORICAL NOTE: Promulgated by the Department of Labor, Office of Employment Security, LR 15:489 (June 1989), amended by the Department of Employment and Training, Office of Employment Security, LR 17:41 (January 1991), amended by the Workforce Commission, Office of Unemployment Insurance, LR 39:

§329. Registration for Work and Claims for Benefits for Total and Part-Total Unemployment

A. Claims for benefits for total or part-total unemployment shall be made on forms prescribed by the administrator for that purpose. In order to claim benefits or waiting period credits for unemployment, an individual shall:

1. file a claim for benefits.

B. The continued claim for benefits for total or part-total unemployment shall be made on forms prescribed by the administrator. Except as otherwise provided in this Section and §333, to establish eligibility for benefits or waiting credits for weeks of total or part-total unemployment during any continuous period of unemployment, the claimant shall continue to report weekly or biweekly, or at more frequent intervals, if directed by the administrator or his representative, to the Louisiana Workforce Commission, provided the reporting at more frequent intervals places no unreasonable burden on him or does not unreasonably limit his opportunity to establish his rights to benefits. For reasons found to be cause for any individual's failure to report, a continued claim may be accepted from such individual, effective as of the first day of his week of total or part-total unemployment, if such continued claim is filed within seven days following the date specified for his reporting. If the failure of an individual to file such a claim at the time specified is found to be without good cause or if the continued claim is not filed within the above mentioned seven days, the continued claim will be disallowed.

C. An individual who returns to employment under conditions which no longer render him eligible for benefits or waiting period credits may claim benefits in person or by mail for the week or portion of a week immediately preceding his employment, provided the week or portion of a week follows without interruption an initial claim or a week for which benefits or waiting period credits were claimed.

D. The administrator may waive or alter either or both of the requirements of this Section to an individual who:

1. is a paid up union member of a recognized craft union;

2. is partially employed and files a claim for part-total benefits;

3. files a claim for shared-work benefits under a shared-work plan; or

4. is on temporary layoff from his regular work with a definite date of return and holds himself available for reemployment at his last place of work.

AUTHORITY NOTE: Promulgated in accordance with R.S. 23:1471-1713.

HISTORICAL NOTE: Promulgated by the Department of Labor, Office of Employment Security, LR 15:490 (June 1989), amended by the Department of Employment and Training, Office of Employment Security, LR 17:41 (January 1991), amended by the Workforce Commission, Office of Unemployment Insurance, LR 39:

§331. Registration for Work and Claims for Benefits for Partial Unemployment

A. Employer Responsibility in the Initiation of a First Claim for Partial Benefits in a Benefit Year

1. Immediately after the termination of any calendar week in which a worker earned less than 60 percent of his customary full-time weekly wage due to lack of work, his employer shall give such worker a low earnings report form, application for partial benefits, setting forth therein the information required of the employer. If such worker completes and returns the low earnings report form to his employer, such employer shall promptly mail or otherwise transmit such form to the Louisiana Workforce Commission.

2. Upon receipt of the low earning report form, the Louisiana Workforce Commission shall promptly notify such worker named therein of his potential rights to partial benefits and shall notify his employer of such worker's weekly benefit amount and benefit year ending date. Upon

receipt thereof, such employer shall record such weekly benefit amount and benefit year ending date upon his payroll records.

B. Employer to Furnish Evidence of Subsequent Weeks of Partial Unemployment. After an employer has been notified of the weekly benefit amount and current benefit year ending date of any worker in his employ, such employer, until otherwise notified, shall immediately after the termination of each calendar week which begins within such benefit year and for which such worker's earnings fall below such weekly benefit amount because of lack of work in such week, furnish each such worker with a copy of the low earnings report form, application for partial benefits, setting forth the information required therein, including the worker's name and Social Security account number, the ending date of such week, the wages earned therein, and a proper certification as to his having worked less than his normal customary full-time hours because of lack of work in such week. If such worker completes and returns such form to his employer, such employer shall promptly mail or otherwise transmit such form to the Louisiana Workforce Commission.

C. Registration and Filing of Claims for Partial Unemployment. A claim for benefits for any individual on the low earnings report form, application for partial benefits, or other form designated by the Louisiana Workforce Commission, mailed by him or his employer in his behalf, or delivered to the Louisiana Workforce Commission shall constitute such individual's notice of unemployment, registration for work, and claim for benefits or waiting period credit, with respect to each such week of partial unemployment covered by the claim provided that such form is executed by such individual and received by the Louisiana Workforce Commission through which the employer has a partial claims agreement within seven days following the week to which the form pertains.

D. Extended Period for Registration and Filing of Claims for Good Cause. Notwithstanding the provisions of §331.C, if the administrator finds that the failure of any individual to register and file a claim for partial unemployment benefits within the time set forth in §331.C was due to failure on the part of the employer to comply with any of the provisions of §331.A, B, and C, or to coercion or intimidation exercised by the employer to prevent the prompt filing of such claim, or to failure by the Louisiana Workforce Commission to discharge its responsibilities promptly in connection with such partial unemployment, the administrator shall extend the period during which such claim may be filed to a date which shall be not less than one week after the individual has received appropriate notice of his potential rights to benefits and his earnings during the period of such partial unemployment, provided that the period during which such claim may be filed shall not be extended beyond the 13-week period subsequent to the end of the actual or potential benefit year during which such week of partial unemployment occurred.

E. Employer Records in Connection with Partial Unemployment. In addition to the requirements set forth in §313, each employer shall keep his payroll records in such form that it would be possible for an inspection to determine with respect to each worker in his employ who may be eligible for partial benefits:

1.a. wages earned, by weeks, described in §327.B;

b whether any week was in fact a week of less than full-time work; and

c. time lost, if any, for each such worker, due to his unavailability for work;

2. this regulation applies only to employers with a partial employer agreement with one or more of the Louisiana Workforce Commission.

AUTHORITY NOTE: Promulgated in accordance with R.S. 23:1471-1713.

HISTORICAL NOTE: Promulgated by the Department of Labor, Office of Employment Security, LR 15:491 (June 1989), amended by the Department of Employment and Training, Office of Employment Security, LR 17:42 (January 1991), amended by the Workforce Commission, Office of Unemployment Insurance, LR 39:

§333. Registration for Work and Claims for Benefits for Individuals Located in Isolated Area, Areas Served on Itinerant Basis, and Other Areas

Repealed.

AUTHORITY NOTE: Promulgated in accordance with R.S. 23:1471-1713.

HISTORICAL NOTE: Promulgated by the Department of Labor, Office of Employment Security, LR 15:491 (June 1989), amended by the Department of Employment and Training, Office of Employment Security, LR 17:43 (January 1991), LR 18:372 (April 1992), repealed by the Workforce Commission, Office of Unemployment Insurance, LR 39:

§337. Payment of Benefits and Change of Address

A. Benefit payments shall be made to the claimant by electronic funds transfer to his bank account, by debit card, check, or other electronic means. Supplemental payments may, in the discretion of the administrator, be made by check, automatic clearing house (ACH), or electronic funds transfer after determination of the individual's eligibility for payment.

B. Each claimant, upon changing his address, shall immediately notify the Louisiana Workforce Commission of such change.

AUTHORITY NOTE: Promulgated in accordance with R.S. 23:1471-1713.

HISTORICAL NOTE: Promulgated by the Department of Labor, Office of Employment Security, LR 15:492 (June 1989), amended by the Department of Employment and Training, Office of Employment Security, LR 17:43 (January 1991), amended by the Workforce Commission, Office of Unemployment Insurance, LR 39:

§343. Employer Elections to Cover Multi-State Workers

A. The following regulations, adopted under R.S. 23:1665 of the Louisiana Employment Security Law, shall govern Louisiana Workforce Commission in its administrative cooperation with other states subscribing to the interstate reciprocal coverage arrangement, herein referred to as *the arrangement*.

B. Definitions, as used in this regulation, unless the context clearly indicates otherwise.

Agency—any officer, board, commission or other authority charged with the administration of the unemployment compensation law of the participating jurisdiction.

Interested Jurisdiction—any participating jurisdiction to which an election submitted under this regulation is sent for its approval; and

a. *interested agency*—the agency of such jurisdiction.

Jurisdiction—any state of the United States, the District of Columbia, Canada, or with respect to the federal government, the coverage of any federal unemployment compensation law.

Participating Jurisdiction—a jurisdiction whose administrative agency has subscribed to the arrangement and whose adherence thereto has not terminated.

Service Customarily Performed by an Individual in More than One Jurisdiction—services performed in more than one jurisdiction during a reasonable period, if the nature of the services gives reasonable assurance that they will continue to be performed in more than one jurisdiction or if such services are required or expected to be performed in more than one jurisdiction under the election.

C. Submission and Approval of Coverage Elections under the Interstate Reciprocal Coverage Arrangement

1. Any employing unit may file an election, on Form RC-1, to cover under the law of a single participating jurisdiction all of the services performed for him by any individual who customarily works for him in more than one participating jurisdiction.

2. Such an election may be filed, with respect to an individual, with any participating jurisdiction in which:

a. any part of the individual's services are performed;

b. the individual has his residence; or

c. the employing unit maintains a place of business to which individual's services bear a reasonable election.

3. The agency of the elected jurisdiction (thus selected and determined) shall initially approve or disapprove the election.

4. If such agency approves the election, it shall forward a copy thereof to the agency of each participating jurisdiction specified thereon, under whose unemployment compensation law the individual or individuals in question might, in the absence of such election, be covered. Each such interested agency shall approve or disapprove the election as promptly as practicable and shall notify the agency of the elected jurisdiction accordingly.

5. In case its law so requires, any such interested agency may, before taking such action, require from the electing employing unit satisfactory evidence that the affected employees have been notified of, and have acquiesced in, the election.

6. If the agency of the elected jurisdiction, or the agency of any interested jurisdiction, disapproves the election, the disapproving agency shall notify the elected jurisdiction and the elected employing unit of its action and of its reasons therefor.

7. Such an election shall take effect as to the elected jurisdiction only if approved by its agency and by one or more interested agencies.

8. An election thus approved shall take effect, as to the interested agency, only if it is approved by such agency.

9. In case any such election is approved only in part, or is disapproved by some of such agencies, the electing employing unit may withdraw its election within 10 days after being notified of such action.

D. Effective Period of Elections

1. Commencement

a. An election duly approved under this regulation shall become effective at the beginning of the calendar quarter in which the election was submitted, unless the election, as approved, specifies the beginning of a different calendar quarter.

b. If the electing unit requests an earlier effective date than the beginning of the calendar quarter in which the election is submitted, such earlier date may be approved solely as to those interested jurisdictions in which the employer has no liability to pay contributions for the earlier period in question.

2. Termination

a. The application of an election to any individual under this regulation shall terminate, if the agency of the elected jurisdiction finds that the nature of the services customarily performed by the individual for the electing unit has changed, so that they are no longer customarily performed in more than one participating jurisdiction. Such termination shall be effective as of the close of the calendar quarter in which notice of such finding is mailed to all parties affected.

b. Except as provided in §343.D.2.a, each election approved hereunder shall remain in effect through the close of the calendar year in which it is submitted, and thereafter until the close of the calendar quarter in which the electing unit gives written notice of its termination to all affected agencies.

c. Whenever an election under this regulation ceases to apply to any individual under §343.D.2.a or b, the electing unit shall notify the affected individual accordingly.

E. Reports and Notices by the Electing Unit

1. The electing unit shall promptly notify each individual affected by its approved election, on the Form RC-2 supplied by the elected jurisdiction, and shall furnish the elected agency a copy of such notice.

2. Whenever an individual covered by an election under this regulation is separated from his employment, the electing unit shall again notify him, forthwith, as to the jurisdiction under whose unemployment compensation law his services have been covered. If at the time of termination the individual is not located in the election jurisdiction, the electing unit shall notify him as to the procedure for filing interstate benefit claims.

3. The electing unit shall immediately report to the elected jurisdiction any change which occurs in the conditions of employment pertinent to its election, such as cases where an individual's services for the employer cease to be customarily performed in more than one participating jurisdiction or where a change in the work assigned to an individual requires him to perform services in a new participating jurisdiction.

F. Approval of Reciprocal Coverage Elections. The Louisiana Workforce Commission hereby delegates to its administrator authority to approve or disapprove reciprocal coverage election in accordance with this regulation.

G. Contributions paid in another state shall not be credited to those contributions which are otherwise due and payable in the state of Louisiana.

AUTHORITY NOTE: Promulgated in accordance with R.S. 23:1471-1713.

HISTORICAL NOTE: Promulgated by the Department of Labor, Office of Employment Security, LR 15:492 (June 1989), amended by the Department of Employment and Training, Office of Employment Security, LR 17:43 (January 1991), amended by the Workforce Commission, Office of Unemployment Insurance, LR 39:

§359. Approved Training Definition

Approved Training—training to which an individual has been referred by the administrator of the Louisiana Workforce Commission or his duly authorized representative.

1. Referral to training will be made to vocational training, basic education or other short term vocationally directed academic courses designed to develop a particular skill.

2. Approval of training in such types of courses may also be given, upon application, if the individual has been accepted as a student at a school or course approved by the Louisiana Department of Education, which is designed to make the individual employable or more employable in an occupation that is in demand and there is reasonable expectation that the individual will be employed upon completion, except no approval will be given to any training course taken primarily for credit toward the degree requirements of baccalaureate or advanced degree, and no approval will be given to a training course which will take longer than 104 weeks to complete

3. No training will be approved for an individual unless it is found that the demands for his present skills are minimal and not likely to improve under present circumstances.

a. The individual in training will be required to furnish reports from the training facility concerning his attendance. Unsatisfactory attendance attested to by the training facility shall constitute grounds for terminating application of the provisions of R.S. 23:1602(1) to the individual unless good cause is shown for the unsatisfactory attendance.

AUTHORITY NOTE: Promulgated in accordance with R.S. 23:1471-1713.

HISTORICAL NOTE: Promulgated by the Department of Labor, Office of Employment Security, LR 15:495 (June 1989), amended by the Department of Employment and Training, Office of Employment Security, LR 17:47 (January 1991), amended by the Workforce Commission, Office of Unemployment Insurance, LR 39:

Family Impact Statement

Implementation of the proposed Rule should not have any known or foreseeable impact on any family as defined by R.S. 49:972(D) or on any family formation, stability, and autonomy. The proposed Rule shall not have any impact on the six criteria set forth in R.S. 49:972(D).

Poverty Impact Statement

The proposed rulemaking will have no impact on poverty as described in R.S. 49:973.

Small Business Statement

The proposed Rule's impact on small business has been considered in accordance with R.S. 49:965.6, and it is estimated that the proposed actions will have negligible impact on small businesses as defined in the Regulatory Flexibility Act.

Public Comments

All interested parties are invited to submit views, arguments, information, or comments on the proposed Rule to Director, Office of Unemployment Insurance Administration, Louisiana Workforce Commission, P.O. Box 94094, Baton Rouge, LA 70804-9040. Written comments must be submitted and received by the agency within 20 days from the publication of this notice. A request pursuant to R.S. 49:953(A)(2) for oral presentation, argument, or public hearing must be made in writing and received by the agency within 20 days of the publication of this notice.

Curt Eysink
Executive Director

FISCAL AND ECONOMIC IMPACT STATEMENT FOR ADMINISTRATIVE RULES
RULE TITLE: Unemployment Insurance

I. ESTIMATED IMPLEMENTATION COSTS (SAVINGS) TO STATE OR LOCAL GOVERNMENT UNITS (Summary)

This rule proposes amending, promulgating, or repealing sections of the Louisiana Administrative Code (LAC), Title 40, Part IV, Chapter 3 Employment Law, Sections 307, 309, 325, 329, 331, 333, 337, 343, and 359.

The proposed rule makes the following amendment to sections listed below: (1) Section 307 clarifies the dates on which an employer's unemployment tax contributions reports and payments are due each fiscal quarter; (2) repeals Section 309 which is a response to advances in technology and the statutory changes for the methods of reporting wages for unemployment insurance taxes. Magnetic media is obsolete. Also, large employers who were required to file using magnetic media are now required to file electronically using the Louisiana Workforce Commission's portal; (3) Sections 325, 329, and 331 only change the obsolete nomenclature to reflect the current name of the agency only. No substantive changes have been made to these sections; (4) repeals Section 333 as claimants are no longer required to personally appear at an unemployment office to register for work—this process is completed either online or on the telephone; thus, the section is obsolete; (5) Section 337 keeps pace with technology and clarifies that weekly benefits will be paid via electronic means, primarily direct deposit to a beneficiary's bank account. This speeds up payments, reduces errors and will help reduce fraud and theft; and (6) Sections 343 and 359 only change the obsolete nomenclature to reflect the current name of the agency only. No substantive changes have been made to these sections.

The Office of Unemployment Insurance Administration (OUIA) within the Louisiana Workforce Commission (LWC) does not anticipate any fiscal impact of this proposed rule (sections 307, 309, 325, 329, 331, 333, 343, and 359) in FY 13-14. The only cost associated with this proposed rule is the administrative expense necessary for the promulgation and revision of publishing the rules. The cost of publishing rulemaking is estimated to be approximately $1,600 for FY 12-13. This is a one-time cost that is routinely included in the department's annual operating budget. In addition, the OUIA estimates a minimal savings to the agency of $235,214.98 for utilization of electronic banking methods as opposed to the cost of issuing checks, which includes employee time, printing costs and postage.

II. ESTIMATED EFFECT ON REVENUE COLLECTIONS OF STATE OR LOCAL GOVERNMENTAL UNITS (Summary)

This proposed rule will have no anticipated effect on revenue collections of state or local governmental units.

III. ESTIMATED COSTS AND/OR ECONOMIC BENEFITS TO DIRECTLY AFFECTED PERSONS OR NONGOVERNMENTAL GROUPS (Summary)

This proposed rule changes to Sections 307, 325, 329, 331, 333, 337, 343, and 359 is not anticipated to have any fiscal impact on persons directly affected or non-governmental groups. Section 309 will have minimal savings to the employer on the cost of preparing magnetic media and forwarding the magnetic media to the Louisiana Workforce Commission. The savings will reflect the purchase of magnetic media and the method of delivery to the Louisiana Workforce. There is no way to estimate the cost as it varies by employer depending on the size of their employee base and their method of delivering the information.

IV. ESTIMATED EFFECT ON COMPETITION AND EMPLOYMENT (Summary)

There will be no effect on competition and employment as a result of this proposed rule.

Curt Eysink	John D. Carpenter
Executive Director	Legislative Fiscal Officer
1302#113	Legislative Fiscal Office

Committee Reports

COMMITTEE REPORT

Senate
Senate Committe on Health and Welfare

Report of the Senate Health and Welfare Committee
Emergency Rule Oversight Hearing on Rule Changes
Proposed by the Board of Pharmacy
(LAC 46:LIII.Chapter 25)

Editor's Note: This Emergency Rule may be viewed in its entirety on page 14 of the January 20, 2013 edition of the *Louisiana Register*.

January 18, 2013

The Senate Health and Welfare Committee convened a meeting on Friday, January 18, 2013, to exercise oversight jurisdiction, as provided for in the Administrative Procedure Act, on Emergency Rule LAC 46:LIII.Chapter 25 proposed by the Louisiana State Board of Pharmacy.

The committee voted to reject the Emergency Rule LAC 46:LIII.Chapter 25 proposed by the Louisiana Board of Pharmacy under the statutory requirements for criteria and issuance of an emergency rule under the Administrative Procedure Act.

The committee voted on the four determinations as provided for in La. R.S. 49:968(D)(3)(a)-(d).

i. The committee voted, without objection, that the proposed rule is in conformity with the intent and scope of the enabling legislation purporting to authorize the adoption thereof.

ii. The committee voted, without objection, that the proposed rule is in conformity and not contrary to all applicable provisions of law and of the constitution.

iii. The committee voted, without objection, that the proposed rule change is not advisable.

iv. The committee voted, without objection, that the proposed rule is unacceptable to the oversight committee.

The committee recommends the Louisiana Board of Pharmacy propose a new Emergency Rule within the next two weeks. The committee agrees an Emergency Rule is necessary to prevent imminent peril to the public health, safety, and welfare; however, the Emergency Rule must address the unintended consequences caused by the Emergency Rule LAC 46:LIII.Chapter 25 proposed by the Louisiana Board of Pharmacy and rejected by the committee.

David R. Heitmeier, O.D.
Chairman

1302#018

Potpourri

POTPOURRI

Department of Environmental Quality
Office of the Secretary
Legal Division

2010 Sulfur Dioxide (SO_2) National Ambient Air Quality Standards (NAAQS)—State Implementation Plan (SIP) Revisions

Under the authority of the Environmental Quality Act, R.S. 30:2051 et seq., the secretary of the Louisiana Department of Environmental Quality gives notice that the Office of Environmental Services, Air Permits Division, Manufacturing Section, will submit to the Environmental Protection Agency (EPA) a revision to the infrastructure, as required by section 110(a)(1) and (2) of the Clean Air Act (CAA). (1302Pot1)

On June 22, 2010, EPA revised the primary SO_2 NAAQS from a 0.14 part per million (ppm) 24-hour standard and a 0.030 ppm annual standard to a 0.075 ppm 1-hour standard. Pursuant to sections 110(a)(1) and (2) of the CAA, each state is required to submit a plan to provide for the implementation, maintenance and enforcement of a newly promulgated or revised NAAQS.

If any party requests a public hearing on this matter, one will be scheduled and the comments received will be submitted as an addendum to the original submittal. All interested persons are invited to submit written comments concerning the revisions no later than 4:30 p.m., March 21, 2013, to Sonya Eastern, Office of Environmental Services, P.O. Box 4313, Baton Rouge, LA 70821-4313, fax (225) 219-3474, or by email to sonya.eastern@la.gov.

A copy of the recommendation may be viewed online at the LDEQ, Air Permits, Engineering and Planning website or the LDEQ headquarters at 602 North Fifth Street, Baton Rouge, LA, room 536-38.

Herman Robinson, CPM
Executive Counsel

1302#024

POTPOURRI

Office of the Governor
Division of Administration
Office of State Purchasing

Pre-Printed Contract Forms; Clauses; Approval
(LAC 34:I.5515)

In accordance with provisions of the Administrative Procedure Act, R.S. 49:968(H)(2), the Office of the Governor, Division of Administration, Office of State Purchasing, proposes to revise Section 5515, Pre-Printed Contract Forms; Clauses; Approval, as it was issued as a Notice of Intent in the November 20, 2012, issue of the *Louisiana Register*. The proposed revisions will allow certain requirements contained in pre-printed contract forms, which had been designated as mandatory to now be designated as discretionary and subject to negotiation between the state and the state's information technology vendors. It is believed that the change will allow the pre-printed contract form process to be both more flexible and more reasonable. A public hearing will be had on the proposed revision on March 26, 2013, at 10:00 AM at the Office of State Purchasing, 1201 N. Third Street, Suite 2-160, Baton Rouge, Louisiana.

Title 34
GOVERNMENT CONTRACTS, PROCUREMENT AND PROPERTY CONTROL
Part I. Purchasing
Subpart 1. Central Purchasing Procedures
Chapter 55. Procedures for Information Technology Hardware, Software, Software Maintenance and Support Services, and Hardware Maintenance

§5515. Pre-Printed Contract Forms; Clauses; Approval

A. In accordance with the provisions of R.S. 39:200(F) the director of purchasing may approve a vendor's pre-printed contract form in accordance with the following requirements.

B. All pre-printed contract forms submitted for approval shall, at a minimum, contain the following provisions:

1. the contract shall be governed by the laws of the state of Louisiana;

2. the unilateral right of the state to order in writing changes in the work within the general scope of the contract in any one or more of the following:

a. drawings, designs, or specifications, if the supplies to be furnished are to be specially manufactured for the state in accordance therewith;

b. method of shipment or packing; or

c. place of delivery;

3. the unilateral right of the state to order in writing temporary stopping of the work or delaying of performance;

4. variations between estimated quantities of work in a contract and actual quantities;

5. termination of the contract for vendor's default;

6. termination of the contract in whole or in part for the convenience of the state;

7. the vendor agrees continuation of contracts in effect during more than one fiscal year is contingent upon the appropriation of funds to fulfill the requirements of the contract by the legislature. If the legislature fails to appropriate sufficient monies to provide for the continuation of the contract or if such appropriation is reduced by the veto of the Governor or by any means provided in the appropriations act or Title 39 of the Louisiana Revised Statutes of 1950 to prevent the total appropriation for the year from exceeding revenues for that year, or for any other lawful purpose, and the effect of such reduction is to provide insufficient monies for the continuation of the contract, the contract shall terminate on the date of the beginning of the first fiscal year for which funds are not appropriated.

C. If applicable, the following provisions may be included as negotiated by the parties and approved by the director of purchasing:

1. liquidated damages as appropriate;
2. specified excuses for delay or nonperformance;
3. the vendor shall agree to indemnify the state and hold the state harmless
4. the vendor shall agree to secure and maintain insurance;

D. The director of purchasing may approve a vendor's pre-printed contract form with the participation of the procurement support team.

E. A pre-printed contract form that has been approved shall display the following language adjacent to its title: "This contract form has been approved by the director of state purchasing."

F. The pre-printed contract form shall also display in the form footer the contract approval date and the contract version number as provided by the director of state purchasing.

G. In the event any contractor fails to fulfill or comply with the terms of any contract, the director of purchasing may rescind approval of the vendor's pre-printed contract form.

H. Only those terms and conditions contained in the pre-printed form approved by the director of purchasing shall have any effect between the parties and any reference to or inclusion of other terms and conditions contained in other documents or websites is prohibited.

I. Any alterations or changes to the terms and conditions of the approved pre-printed form are prohibited and will automatically void the approval of the pre-printed form.

AUTHORITY NOTE: Promulgated in accordance with R.S. 39:200(F).

HISTORICAL NOTE: Promulgated by the Office of the Governor, Division of Administration, Office of State Purchasing, LR 39:

Jan B. Cassidy
Assistant Commissioner

1302#038

POTPOURRI

Department of Health and Hospitals
Office of the Secretary

Stop Order—Added Controlled Dangerous Substances

Notice is hereby given that, pursuant to La. R.S. 40:996.1 et seq., the following Notice of Intent was published in *The Advocate* on January 30, 2013 and January 31, 2013:

Notice of Intent

Pursuant to the provisions of La. R.S. 40:996.1 et seq., the Secretary of the Louisiana Department of Health and Hospitals ("DHH") hereby gives notice of intention to adopt a rule declaring 2-(4-iodo-2, 5-dimethoxyphenyl)-N-[(2-methoxyphenyl) methyl] ethanamine (25I NBOMe) (hereinafter "25-I") a dangerous substance and issuing a dangerous substance stop order prohibiting the sale, distribution, manufacture, or dispensing of 25-I. In accordance with La. R.S. 40:996.5(C), the following information is hereby provided:

(1) An explanation of the basis and rationale for the intended action, a summary of the information, and data supporting the intended action:

The Secretary intends to adopt said rule because of his determination that 25-I poses a threat to the health of the citizens of the state of Louisiana. At least one confirmed death caused by ingestion of 25-I occurred in Louisiana in 2012, and the U.S. Department of Justice ("USDOJ") reports that deaths attributable to 25-I have also occurred in other states [see *Characterization of Eleven 2,5-Dimethoxy-N-(2-methoxybenzyl)phenethylamine (NBOMe) Derivatives and Differentiation from their 3- and 4-Methoxybenzyl Analogues - Part I*, John F. Casale, Patrick A. Hays, U.S. Department of Justice, Drug Enforcement Administration, Special Testing and Research Laboratory, available for viewing at http://www.justice.gov/dea/pr/microgram-journals/2012/mj9_84-109.pdf]. The above-referenced USDOJ report describes 25-I as a highly potent hallucinogenic to which violent physical/mental episodes has been attributed. 25-I is a relatively new substance, having no accepted medical use in the United States and only recently encountered by law enforcement officials.

(2) The time, the location, and the manner in which interested persons may present their views thereon:

Interested persons have until 4:30 p.m. on February 4, 2013, to submit a request for oral argument or presentation concerning the proposed rule, and until 4:30 p.m. on February 11, 2013, to submit data, views, comments, or arguments in writing concerning the proposed rule. Such requests or comments should be addressed to Brian R. Warren, Food and Drug Unit, Sanitarian Services Section, Office of Public Health, Mail Bin # 10, P.O. Box 4489, Baton Rouge, LA 70821-4489, or faxed to (225) 342-7672. If requests or comments are to be shipped or hand-delivered, please address the information as shown above and deliver to the Bienville Building, 628 N. 4th Street - Room 166, Baton Rouge, LA 70802. If request for an opportunity for oral presentation or argument is made by 4:30 p.m. on February 4, 2013, then a public hearing will be held on February 18, 2013. Please call (225) 342-9355 to find out if a public hearing is being held.

(3) A statement that the intended action complies with the provisions of R.S. 40:996.1 through 996.7:

The intended action and rule complies with the provisions of R.S. 40:996.1 through 996.7.

(4) The text of the proposed rule:

Pursuant to the authority granted by La. R.S. 40:996.1 et seq., the Secretary of the Louisiana Department of Health and Hospitals has determined that the following substance constitutes an imminent hazard to the public health, safety, and welfare, and, accordingly, is hereby declared to be a "dangerous substance":

2-(4-iodo-2, 5-dimethoxyphenyl)-N-[(2-methoxyphenyl) methyl] ethanamine (25I NBOMe)

A "dangerous substance stop order", as defined in La. R.S. 40:996.2, prohibiting the sale, distribution, manufacture, or dispensing of the above-listed dangerous substance, is hereby issued and declared.

The Secretary's finding that the above-listed substance is a "dangerous substance", and the issuance herein of a "dangerous substance stop order" concerning said substance, is based upon the following findings and determinations,

made after the Secretary's consideration of the factors set forth in La. R.S: 40:996.3(A):

1. The substance has a high potential for abuse. Because the substance has no legitimate medicinal use and is a highly potent hallucinogenic to which violent physical/mental episodes and death have been attributed, any use thereof constitutes abuse.

2. The substance has no current medical use in treatment in the United States. After consulting with the State Health Officer, the Secretary has determined that the substance has no accepted medical use in the United States or any other country.

3. There is a lack of accepted safety for use of the substance under medical supervision. The substance has no accepted medical use. Moreover, a report prepared by the U.S. Department of Justice indicates that there have been no scientific studies concerning the potency of the substance. Use of the substance even under medical supervision would therefore be unsafe and unacceptable.

4. There is an imminent hazard to the health, safety, and welfare of the citizens of Louisiana requiring the substance to be declared a dangerous substance and the issuance of a dangerous substance stop order as authorized by the provisions of this Section.

The above-listed rule shall, unless a legislative oversight hearing is conducted and the rule is found unacceptable by the legislative oversight committee and the governor does not disapprove of the action taken by the legislative oversight committee, become effective on March 1, 2013, and remain in effect through the sixtieth day after final adjournment of the 2013 regular session of the Louisiana Legislature.

Bruce Greenstein
Secretary

1302#117

POTPOURRI

Department of Natural Resources
Office of Conservation

Class III (Solution-Mining) Injection Wells

LAC 43:XVII.101, et seq. currently sets forth, among other things, the regulations for permitting, drilling, operating and plugging Class III (Solution-Mining) Injection Wells. The Office of Conservation announces that it intends to promulgate revised rules to replace portions of LAC 43:XVII.101, et seq., and solicits comments from interested parties prior to promulgating the amended rules. The purpose of these proposed rule amendments is to update regulations regarding the location, operational and reporting requirements for both proposed and existing Class III (Solution Mining) Injection Wells. The proposed rule revisions would apply to all solution mined salt caverns both in existence at the time of rule promulgation and those applied for in the future.

Changes found in the proposed rules include: 1) financial security is to be maintained for post-closure costs as well as closure costs; 2) an updated site assessment to include a geological, geo-mechanical and engineering assessment of stability of salt stock and overlying/surrounding sediment based on past, current and planned well and cavern operations is to be maintained; 3) locations of caverns and proposed caverns in relation to other caverns and the periphery of the salt stock are to be provided on maps and cross-section depictions based upon best available information and updated at least every five years; 4) mandatory setback distance locations for new caverns in relation to the periphery of salt stock; 5) mandatory monitoring plan implementation for any existing caverns within the mandatory setback distance locations;6) provisions for consideration of approval to plug and abandon; and 7) mandatory submission and maintenance of an updated post-closure plan to include subsidence monitoring, corrective action, site remediation, etc., as may be necessary following plugging and abandonment.

In addition to commenting on the substance of the proposed rule changes themselves, the Office of Conservation also seeks information from current operators of solution mined salt caverns to assist it in drafting the fiscal and economic impact statement required by R.S. 49:953, and to specifically provide information concerning the proposed rule change's estimated costs and/or economic benefits to directly affected persons or non-governmental groups and the estimated effect on competition and employment.

A copy of the proposed rules can be found online at the Office of Conservation portion of the LDNR website under the section titled "Rules": http://dnr.louisiana.gov. For more information, contact Blake Canfield, at (225) 342-5500. This notice is available on the Department of Natural Resources, Office of Conservation's website.

James H. Welsh
Commissioner

1302#112

POTPOURRI

Department of Natural Resources
Office of Conservation

Electric Well Logs (LAC 43:XIX.107 and 1305)

LAC 43:XIX.107.B requires that electrical logs, when run, of all test wells, or wells drilled in search of oil, gas, sulphur and other minerals, shall be mailed in duplicate to the district office. In addition, LAC 43:XIX.1305.B.1 requires multiple completion applications to be filed in duplicate with the district office. In an effort to reduce the costs of handling and maintaining these records, further align office requirements for data submittal with the standard practices now common in the ordinary business practices of the regulated community while simultaneously maintaining compliance with R.S. 44:1(B), and improving public access to this data, the Office of Conservation announces that it intends to promulgate revised rules for LAC 43:XIX.107.B and LAC 43:XIX.1305.B.1, and solicits comments from the

public prior to promulgating the amended rule. The intent of these rule amendments is to minimize the cost of compliance, and agency costs to handle and store this data through the use of available technology, and to provide more efficient public access to the electric well log data via the SONRIS system. A copy of the current rules can be found online at this web address: http://dnr.louisiana.gov/assets/OC/43XIX_Nov2011.pdf.

For more information, contact Tyler Gray, at (225) 342-5570. This notice is available on the Department of Natural Resources, Office of Conservation's website.

James H. Welsh
Commissioner

1302#110

POTPOURRI

Department of Natural Resources
Office of Conservation

Orphaned Oilfield Sites

Office of Conservation records indicate that the Oilfield Sites listed in the table below have met the requirements as set forth by Section 91 of Act 404, La. R.S. 30:80 et seq., and as such are being declared Orphaned Oilfield Sites.

Operator	Field	District	Well Name	Well Number	Serial Number
T, F & B OIL COMPANY, LLC	LITTLE CHENIER E	L	MERMENTAU MINERAL LAND CO	002	197469
T, F & B OIL COMPANY, LLC	LITTLE CHENIER E	L	7100 RA SUA;MERM MIN LAND CO	001	215824
LANFORD & BACKUS	ALABAMA BEND	S	ODIE WAITES	001	41827
C. L. MORRIS	CADDO PINE ISLAND	S	M HENDERSON	001	22084
ORACLE OIL, LLC	ANGIE	L	CROWN ZELLERBACH 42 SWD	001	194369
ORACLE OIL, LLC	ANGIE	L	JA L RA SUE;PETERS HEIRS	001	195985
ORACLE OIL, LLC	ANGIE	L	JAMES LIME RA SUG;O ROBBINS	001	198804
ORACLE OIL, LLC	LAC BLANC	L	13900 RA SUA;LB BROUSSARD ETAL	001	236248

James H. Welsh
Commissioner

1302#108

POTPOURRI

Department of Natural Resources
Office of the Secretary
Fishermen's Gear Compensation Fund

Latitude/Longitude Coordinates

In accordance with the provisions of R.S. 56:700.1 et seq., notice is given that 4 claims in the amount of $15,560.38 were received for payment during the period January 1, 2013 - January 31, 2013.

There were 4 paid and 0 denied.

Latitude/Longitude Coordinates, in Degree Decimal Minutes, of reported underwater obstructions are:

29 03.225	89 16.663	Plaquemines
29 26.034	89 57.539	Plaquemines
29 35.209	90 02.716	Jefferson
29 41.474	91 57.328	Iberia

A list of claimants and amounts paid can be obtained from Gwendolyn Thomas, Administrator, Fishermen's Gear Compensation Fund, P.O. Box 44277, Baton Rouge, LA 70804 or you can call (225)342-9388.

Stephen Chustz
Secretary

1302#041

CUMULATIVE INDEX
(Volume 39, Number 2)

2012	
Pages	**Issue**
1-230	January
231-441	February

EO—Executive Order
PPM—Policy and Procedure Memoranda
ER—Emergency Rule
R—Rule
N—Notice of Intent
CR—Committee Report
GR—Governor's Report
L—Legislation
P—Potpourri
QU—Administrative Code Quarterly Update

ADMINISTRATIVE CODE QUARTERLY UPDATE
Cumulative
January 2012-December 2012, 219QU

AGRICULTURE AND FORESTRY
Agricultural and Environmental Sciences, Office of
Seed Commission
Labeling and testing, 351N
Structural Pest Control Commission
Minimum specifications for bait and baiting requirements, 232ER
Minimum specifications for trench and treat termite control work, 232ER
Structural pest control, 300R
Termite control—trench and treat, 358N
Wood destroying insect report and requests for rule changes or declaratory rulings, 233ER

CHILDREN AND FAMILY SERVICES
Formerly Department of Social Services.
Division of Programs
Economic Stability and Self-Sufficiency
Child welfare emergency assistance services program, 67R
Drug screening, energy assistance and substance abuse treatment programs, 235ER
Increasing resource limit for households with elderly and disabled members, 4ER
Temporary Assistance to Needy Families (TANF) caseload reduction report, 223P
Verbal fair hearing withdrawals, 162N
Licensing Section
Criminal records check, 166N
Emergency preparedness and evacuation planning, 4ER
Juvenile detention facilities fees, fines, penalties, and state central registry disclosure, 127N
Penalty for the operation of an unlicensed facility, 66R
Secretary, Office of
Community and family support system flexible family fund, 5ER

CULTURE, RECREATION AND TOURISM
State Library, Office of
Cultural resources, 67R
State Parks, Office of
State parks, 359N

ECONOMIC DEVELOPMENT
Business Development Services, Office of
Competitive projects tax exemption program, 131N
Entertainment Industry Development, Office of
Entertainment industry tax credit programs
Digital media and software act, 133N
Musical and theatrical production income tax credit program, 140N

EDUCATION
Elementary and Secondary Education, Board of
Technical revisions and updates, 307R
Bulletin 111—The Louisiana School, District and State Accountability System—School Performance Score Component, 304R
Bulletin 118—Statewide Assessment Standards and Practices, 73R, 144N
Bulletin 119—Louisiana School Transportation Specifications and Procedures, 80R
Bulletin 126—Charter Schools
Application process, 81R
Recruitment and enrollment, 148N
Bulletin 129—The Recovery School District
Return of schools to LEA, 82R, 150N
Bulletin 130—Regulations for the Evaluation and Assessment of School Personnel, 368N
Bulletin 133—Scholarship Programs, 82R
Bulletin 134—Tuition Donation Rebate Program, 152N
Bulletin 135—Health and Safety, 158N
Bulletin 741—Louisiana Handbook for School Administrators
High schools, 168N
Bulletin 741 (Nonpublic)—Louisiana Handbook for Nonpublic School Administrators—Programs of Study, 306R
Regents, Board of
Registration and licensure, 84R
Student Financial Assistance Commission
Student Financial Assistance, Office of
TOPS GPA calculation, 308R

ENVIRONMENTAL QUALITY

Secretary, Office of
Legal Affairs Division
2008 Ozone (O3) national ambient air quality standards (NAAQS)—state implementation plan (SIP) revisions, 223P
2010 Sulfur dioxide (SO2) national ambient air quality standards (NAAQS)—state implementation plan (sip) revisions, 433P
2012 Annual incorporation by reference of certain federal air quality regulations, 372N
Control facilities to be installed when feasible, 169N
Incorporation by reference of 40 CFR 60, 171N
Office of environmental assessment references, 85R
Regulated new source review (NSR) pollutant, 375N

EXECUTIVE ORDERS

BJ 12-24 Executive Branch—Expenditure Reduction, 1EO
BJ 12-25 Executive Branch—Spending Freeze, 2EO
BJ 13-01 School and Campus Safety, 3EO
BJ 13-02 Carry-Forward Bond Allocation 2012, 231EO

GOVERNOR

Administration, Division of
Facility Planning and Control
Capital improvement projects—building code, 85R
Pardons, Board of
General administration and clemency, 7ER
Racing Commisison
Disputed races, 175N
Nonsteroidal and/or anti-inflammatory medication, 176N
State Purchasing, Office of
Master agreements; clauses; approval, 309R
Pre-printed contract forms; clauses; approval, 433P
Procurement of consulting services as related services, 309R
Coastal Protection and Restoration Authority
Public hearing—state fiscal year 2014 draft annual plan, 223P
Certified Shorthand Reporters, Board of Examiners
Continuing education, 172N
Commission on Law Enforcement and Administration of Criminal Justice
Innocence compensation fund, 173N
Crime Victims Reparations Board
Limits on awards, 174N
Real Estate Appraiser's Board
Real Estate
Appraisal management companies, 376N
Peer review committees and valuation services, 310R
Tax Commission
Public hearing, 224P

HEALTH AND HOSPITALS

Aging and Adult Services, Office of
Home and community-based services waivers
Adult Day Health Care
Reimbursement rate reduction, 250ER
Community choices waiver, 32ER, 319R
Reimbursement methodology, 250ER
Reimbursement rate reduction, 36ER
Personal care services
Long-term
Cost reporting requirements, 271ER
Policy clarifications and service limit reduction, 46ER
Reimbursement rate reduction, 271ER, 387N
Behavioral Health, Office of
Behavioral Health Services
Statewide management organization, adults capitated payment reduction, 317R
Children's behavioral health services
Reimbursement rate reduction, 317R
Substance abuse services, reimbursement rate reduction, 281ER
Supplemental payments, 237ER
Citizens with Developmental Disabilities, Office of
Home and community-based services waivers
Children's choice
Money follows the person rebalancing demonstration extension, 32ER
New opportunities waiver
Reimbursement rate reduction, 192N
Residential options waiver
Reimbursement rate reduction, 193N, 251ER
Supports waiver
Reimbursement rate reduction, 194N, 252ER
Dentistry, Board of
Continuing education, licensure examinations and criminal history records, 86R
General provisions—evidence of graduation, restricted licensees, temporary licenses, and returning to active practice, 86R
Licensure by credentials, 87R
Restrictive license; fees, sedation, educational requirements, facilities and exceptions, 89R
Reuse of toothbrush; continuing education requirements; examination of dentists, 378N
Examiners of Psychologists, Board of
Fees, 311R
Health Services Financing, Bureau of
Abortion facilities—licensing standards, 18ER, 190N
Adult dentures program, reimbursement rate reduction, 316R
All inclusive care for the elderly
Reimbursement rate reduction, 316R
Ambulatory surgical centers, reimbursement rate reduction, 316R
Behavioral health services
Statewide management organization, adults capitated payment reduction, 317R
Supplemental payments, 237ER

HEALTH AND HOSPITALS (Continued)

Children's behavioral health services. reimbursement rate reduction, 317R
Coordinated care network
Dental benefits plan, 19ER, 238ER
Pharmacy services coverage, 92R, 318R
Physician services, reimbursement methodology, 25ER
Disproportionate share hospital payments, 27ER
Community hospitals, 29ER
Public-private partnerships, 244ER
Early and periodic screening, diagnosis and treatment, 318R
Dental program, 29ER
School-based health centers, 30ER
School-based nursing services, 245ER
Uncompensated care payments, 93R
Electronic health records incentive payments, inclusion of optometrists, 31ER
End stage renal disease facilities, reimbursement rate reduction, 248ER
Family planning clinics
Reimbursement methodology office of public health uncompensated care payments, 93R
Reimbursement rate reduction, 248ER
Family planning waiver, reimbursement rate reduction, 249ER
Home and community-based services waivers
Adult Day Health Care
Reimbursement rate reduction, 250ER
Children's choice
Money follows the person rebalancing demonstration extension, 32ER
Community choices waiver, 32ER, 319R
Reimbursement methodology, 250ER
Reimbursement rate reduction, 36ER
Cost reporting requirements, 253ER
New opportunities waiver
Reimbursement rate reduction, 192N
Residential options waiver
Reimbursement rate reduction, 193N, 251ER
Supports waiver
Reimbursement rate reduction, 194N, 252ER
Home health program
Cost reporting requirements, 255ER
Durable medical equipment
Reimbursement rate reduction, 196N, 254ER
Nursing and home health aide services
Reimbursement rate reduction, 197N, 254ER
Hospice services, 37ER, 255ER
Repeal of new enrollments termination, 259ER
Inpatient hospital services
Distinct part psychiatric units reimbursement methodology, 94R
Free-standing psychiatric hospitals
Low income and needy care collaboration, 323R
Major teaching hospitals
Qualifying criteria, 323R
Supplemental payments, 259ER
Non-rural, non-state hospitals
Reimbursement rate reduction, 38ER
Non-rural, non-state public hospitals
Reimbursement methodology, 39ER, 95R
Public-private partnerships
Reimbursement methodology, 39ER
Supplemental payments, 260ER
Small Rural Hospitals
Low income and needy care collaboration, 40ER
Intermediate care facilities for persons with developmental disabilities
Reimbursement rate reduction, 261ER
Intermediate care facilities for persons with developmental disabilities—public facilities
Reimbursement methodology, 325R
Laboratory and radiology services
Office of public health uncompensated care payments, 95R
Reimbursement rate reduction, 262ER, 380N
LaCHIP affordable plan
Dental program, reimbursement rate reduction, 263ER, 381N
Medicaid provider screening and enrollment, 198N
Medical transportation program
Emergency ambulance services
Reimbursement rate reduction, 264ER, 383N
Supplemental payments, 264ER
Nursing facilities
Per diem rate reduction, 384N
Reimbursement methodology
Low income and needy care collaboration, 267ER
Private room conversions, 268ER
Reimbursement rate reduction after state fiscal year 2013, 269ER
Reimbursement rate reduction before state fiscal year 2013, 269ER
Outpatient hospital services
Diabetes self-management training, 41ER
Non-rural, non-state hospitals and children's specialty hospitals, 327R
Reimbursement rate reduction, 42ER
Non-rural, non-state public hospitals
Supplemental payments, 44ER
Pediatric day health care program
Reimbursement rate reduction, 270ER, 385N
Personal care services
Long-term
Cost reporting requirements, 200N, 271ER
Policy clarifications and service limit reduction, 46ER
Reimbursement rate reduction, 271ER, 387N
Pharmacy benefits management program
Methods of payment, 272ER
Pregnant women extended services
Dental services, program termination, 50ER
Substance abuse screening and intervention services, 51ER
Professional services program
Anesthesia services
Reimbursement rate reduction, 275ER
Children's immunizations
Reimbursement methodology, 52ER

HEALTH AND HOSPITALS (Continued)
Diabetes self-management training, 53ER
Family planning services
Office of public health uncompensated care payments, 96R
Reimbursement rate reduction, 276ER
Immunizations office of public health uncompensated care payments, 96R
Immunizations reimbursement methodology, 277ER
Physician services
Reclassification of optometry services, 54ER
Reimbursement methodology, 56ER, 278ER
Reimbursement rate reduction, 57ER
Rehabilitation clinics, termination of coverage for recipients 21 and older, 58ER
Reimbursement methodology, Supplemental payments, 279ER
Prosthetics and orthotics, reimbursement rate reduction, 281ER
Substance abuse services, reimbursement rate reduction, 281ER
Targeted case management
HIV coverage termination, 59ER
Nurse family partnership program
Termination, 60ER
Uncompensated care payments, 97R
Reimbursement rate reduction, 282ER
Licensed Professional Counselors, Board of Examiners
Medical Examiners, Board of
Practice of mental health counseling for serious mental illnesses, 283ER
Physician practice; dispensation of medications, 185N
Nursing Facility Administrators, Board of Examiners
Exam requirements and complaints, 182N
Pharmacy, Board of
Compounding for prescriber's use, 14ER, 186N, 236ER
Controlled dangerous substance license for non-resident distributors, 312R
Controlled dangerous substances in emergency drug kits, 312R
Durable medical equipment (DME) permit, 15ER
Hospital off-site satellite pharmacy, 188N
Institutional pharmacies, 313R
Interstate remote processing, 313R
Prescription monitoring program, 314R
Security of prescription department, 315R
Public Health, Office of
Added controlled dangerous substance, 284ER
Disease reporting requirements and blood bank storage temperature, 201N
Early and periodic screening, diagnosis and treatment uncompensated care payments, 93R
Family planning clinics
Reimbursement methodology office of public health uncompensated care payments, 93R
Laboratory Services
Office of public health uncompensated care payments, 95R
Permit Requirements and additional requirements for a potable water supply, and inapplicability of certain requirements of ten state standards, 205N
Professional services program
Family planning services office of public health uncompensated care payments, 96R
Immunizations office of public health uncompensated care payments, 96R
Targeted case management—nurse family partnership program, uncompensated care payments, 97R
Review and approval of plans and specifications for issuance of a permit for a potable water supply, 61ER
Secretary, Office of
Community and family support system flexible family fund, 5ER
Stop order—added controlled dangerous substances, 434P
Speech-Language Pathology and Audiology, Board of Examiners
General requirements, 179N
Wholesale Drug Distributors, Board of
Policy and procedures and quarantine of legend drugs or legend devices, 91R

LEGISLATION
Committee Reports
Report of the Senate Health and Welfare Committee emergency rule oversight hearing on rule changes proposed by the Board of Pharmacy, 432CR

NATURAL RESOURCES
Coastal Management, Office of
Public hearings and notices, 327R
Conservation, Office of
Class III (solution-mining) injection wells, 435P
Electric well logs, 435P
Orphaned oilfield sites, 224P, 436P
Statewide orders No. 29-B and 29-B-a, 284ER
Statewide order No. 29-B—hydraulic fracture stimulation operations, 388N
Oil Spill Coordinator's Office
Deepwater horizon oil spill phase II early restoration plan and environmental review, 225P
Secretary, Office of
Fishermen's Gear Compensation Fund
Latitude/longitude coordinates, 436P
Underground obstruction coordinates, 225P

PUBLIC SAFETY AND CORRECTIONS
Gaming Control Board
Truck stop travel lanes, 329R
Motor Vehicles, Office of
Driver education, 98r
State Police, Office of
Special permit for vehicles hauling sugarcane, 98R
State Uniform Construction Code Council
State uniform construction code, 62ER, 207N

REVENUE

Policy Services Division
Corporation income and franchise tax filing extensions, 99R
Income tax credits for wind or solar energy systems, 99R
Income—withholding tax—payment, 103R
Individual income tax filing extensions, 102R
Withholding by professional athletic teams, 103R, 329R

TRANSPORTATION

Aviation Section
Aviation program needs and project priority process, 104R
Highways/Engineering, Office of
Design-build pilot program repeal, 117R
Multimodal Planning, Office of
Port design-build pilot program, 117R
Operations, Office of
Special permit for vehicles hauling sugarcane, 98R
Professional Engineering and Land Surveying Board
Naval architecture/marine engineering and flood protection levees, 209N

TREASURY

Louisiana State Employees' Retirement System, Board of
Election to the board of trustees, 118R
Plan year; limitations year, 120R
Louisiana State Police Retirement System, Board of Trustees
Internal revenue code provisions, 210N
Municipal Police Employees' Retirement System, Board of Trustees
Internal revenue code provisions, 389N

WILDLIFE AND FISHERIES

Wildlife and Fisheries Commission
Commercial king mackerel harvest, commercial king mackerel season 2013-14, 63ER
Commercial shark season 2013, 63ER
Exotic fish
Designation and taking, 120R
Falconry, 120R
Fall inshore shrimp season closure, 296ER
General and wildlife management area hunting rules and regulations, 397N
Recreational and commercial fisheries closure
February 7, 2013, 296ER
January 17, 2013, 297ER
Reef fish
Harvest regulations regulations, 330R
Greater amberjack commercial trip limit 2013, 64ER
Recreational reef fish seasons 2013-2014, 65ER
Remote setting program, 289ER
Resident game hunting season, 413N
Restricted amphibians and reptiles, 419N
Shrimp season closure
Fall inshore
December 18, 2012, 64ER
December 20, 2012, 64ER

WORKFORCE COMMISSION

Unemployment Insurance, Office of
Appealed claims for board of review, 420N
Benefits for unemployment insurance, 422N
Unemployment insurance, 426N
Workers'Compensation, Office of
Electronic medical billing and payment companion guide, 331R